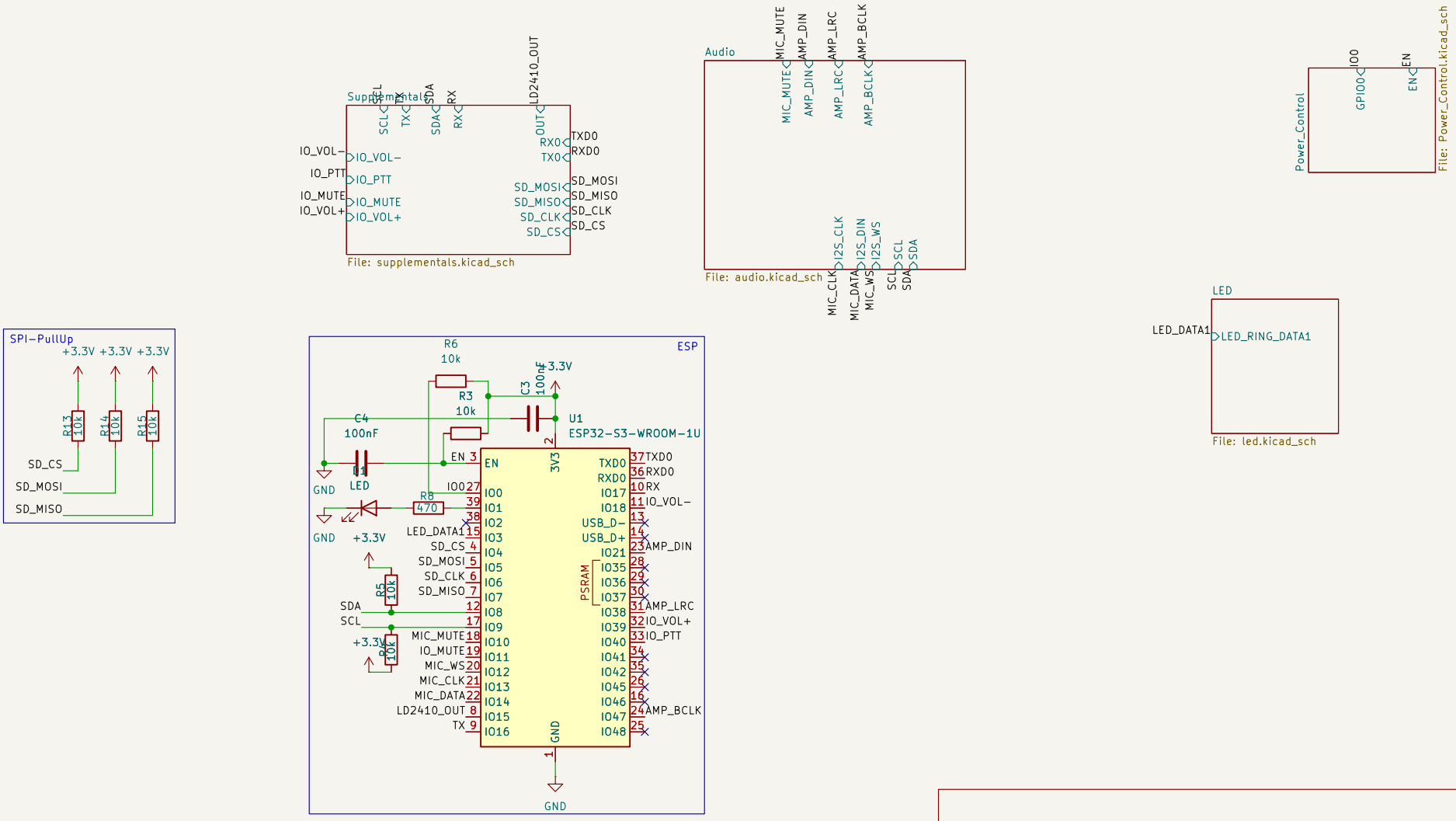

Leonie

Sheet: /

File: Hannah_Satellite.kicad_sch

Title: Hannah Satellite

Size: A4	Date: 2026−05−11	**Rev: 5**
KiCad E.D.A. 10.0.6		Id: 1/6

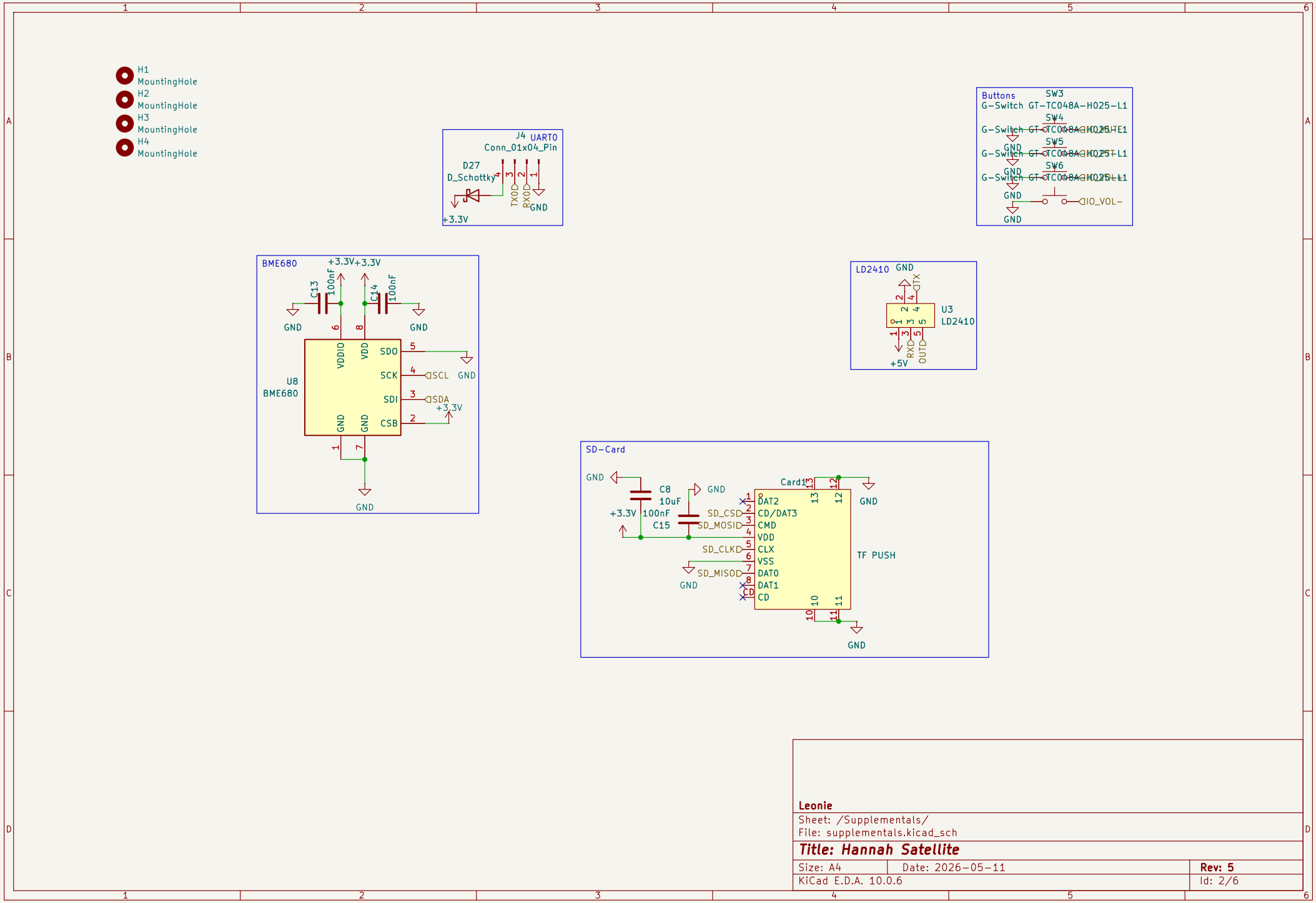
H1
MountingHole
H2
MountingHole
H3
MountingHole
H4
MountingHole
J4 UART0
Conn_01x04_Pin
D27
D_Schottky
TXD
RXD
GND
+3.3V
Buttons
G-Switch
SW3
GT-TC048A-H025-L1
SW4
SW5
SW6
GND
IO_VOL-
BME680
+3.3V
C13
100nF
C14
VDDIO
VDD
SDO
SCK
SDI
CSB
SCL
SDA
U8
BME680
LD2410
U3
LD2410
TX
RX
OUT
+5V
SD-Card
C8
10uF
C15
100nF
SD_CSD
SD_MOSID
SD_CLKD
SD_MISOD
CD
Card1
DAT2
CD/DAT3
CMD
VDD
CLX
VSS
DAT0
DAT1
CD
TF PUSH
Leonie
Sheet: /Supplementals/
File: supplementals.kicad_sch
Title: Hannah Satellite
Size: A4
Date: 2026-05-11
Rev: 5
KiCad E.D.A. 10.0.6
Id: 2/6

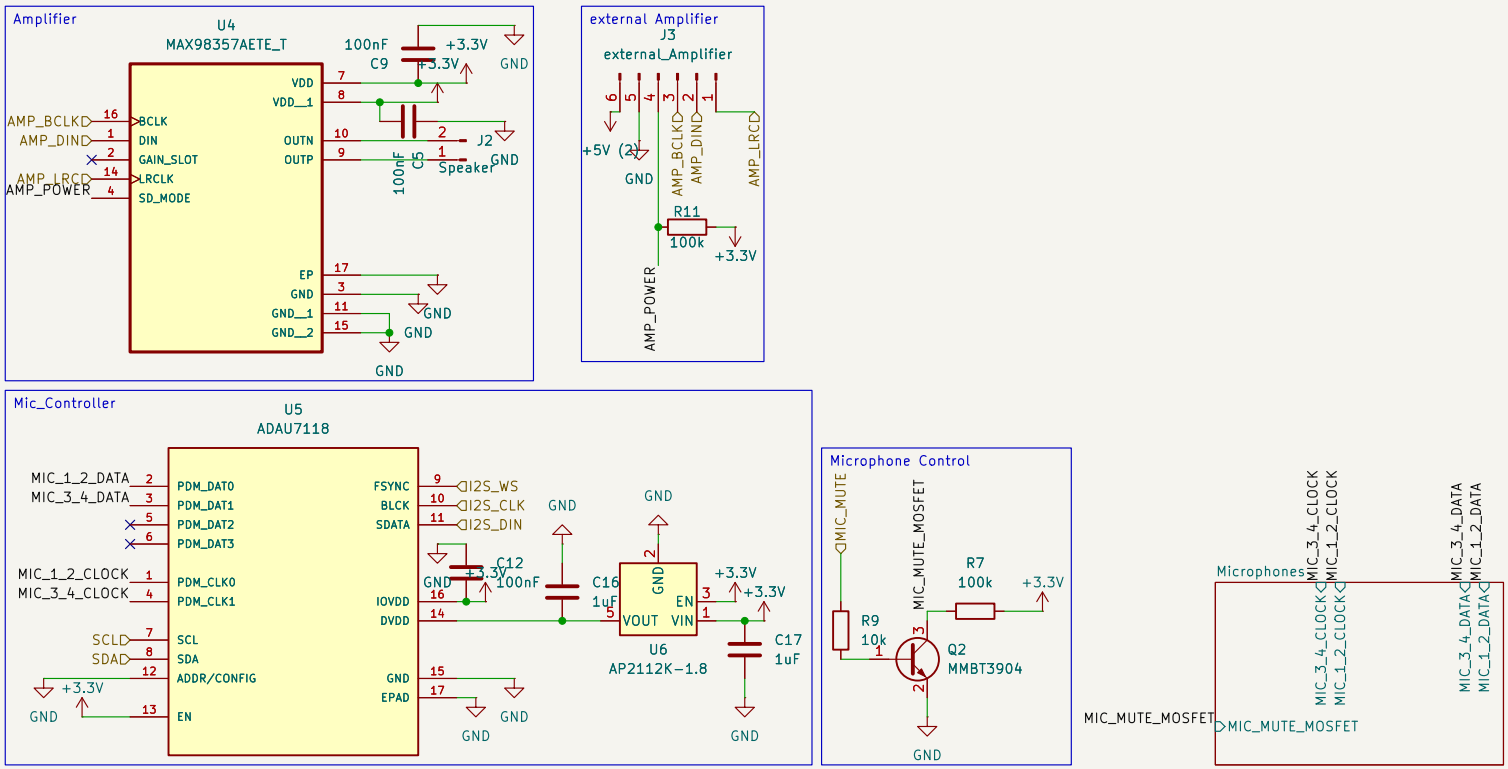

Leonie

Sheet: /Audio/
File: audio.kicad_sch

Title: Hannah Satellite

Size: A4	Date: 2026-05-11	**Rev: 5**
KiCad E.D.A. 10.0.6		Id: 3/6

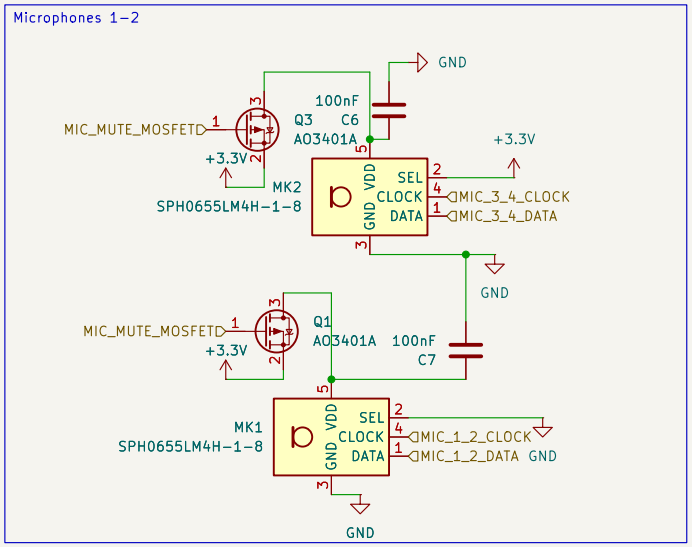

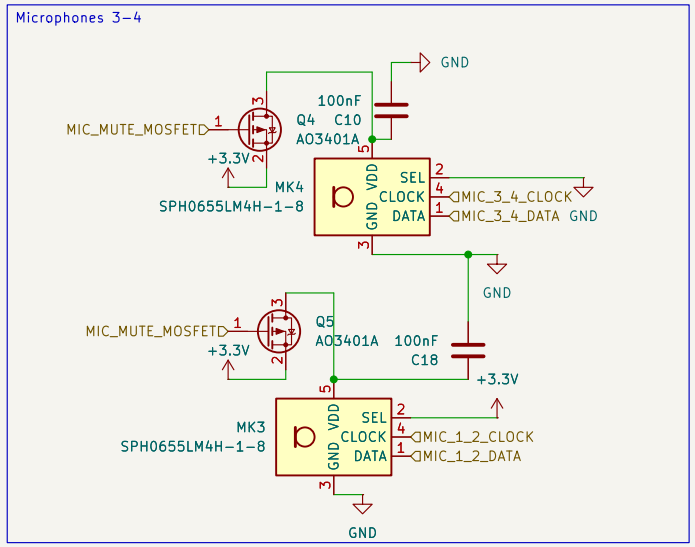

Leonie

Sheet: /Audio/Microphones/
File: microphones.kicad_sch

Title: Hannah Satellite

Size: A4	Date: 2026-05-11	**Rev: 5**
KiCad E.D.A. 10.0.6		Id: 4/6

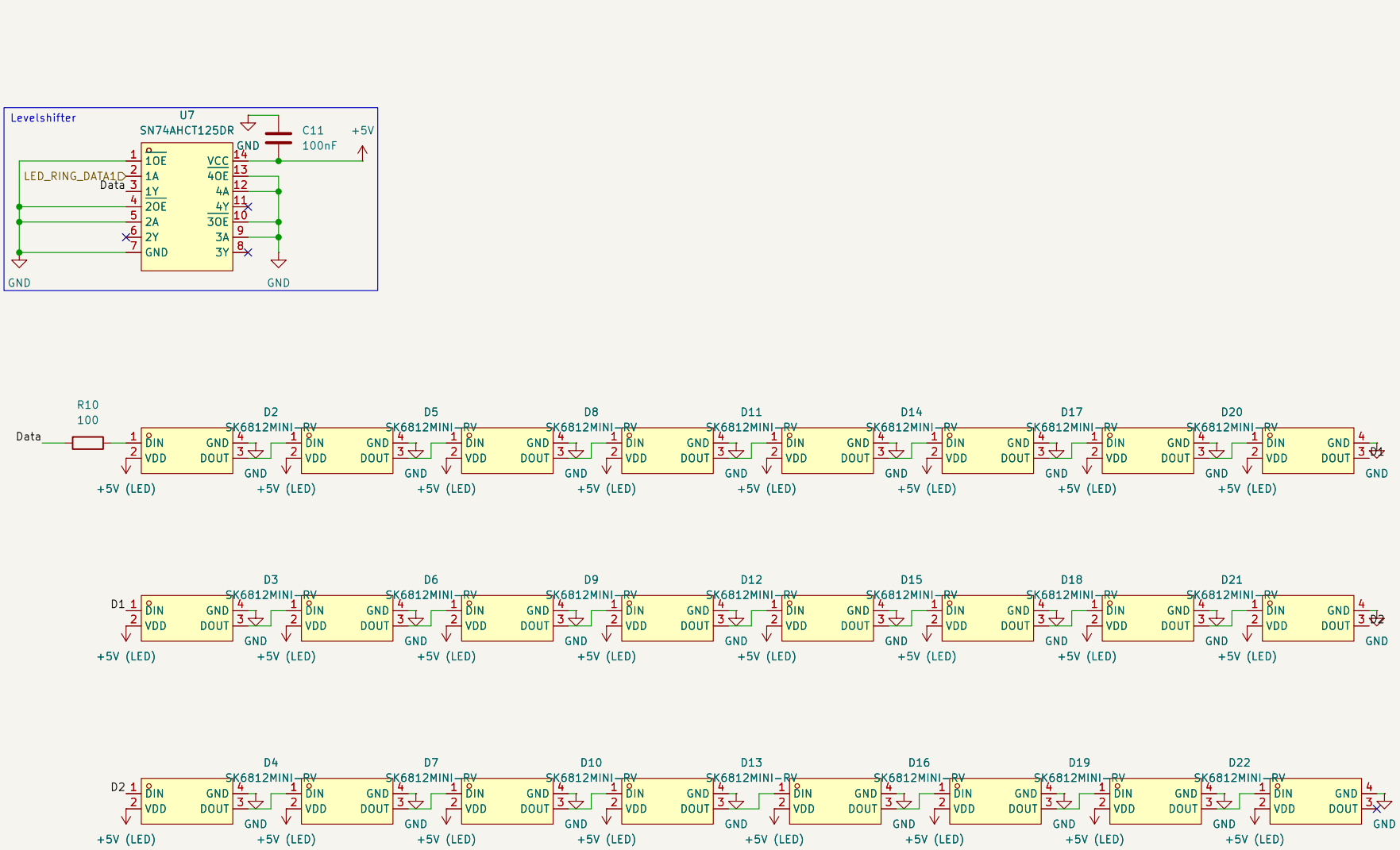

Leonie

Sheet: /LED/

File: led.kicad_sch

Title: Hannah Satellite

Size: A4	Date: 2026-05-11	**Rev: 5**
KiCad E.D.A. 10.0.6		Id: 5/6

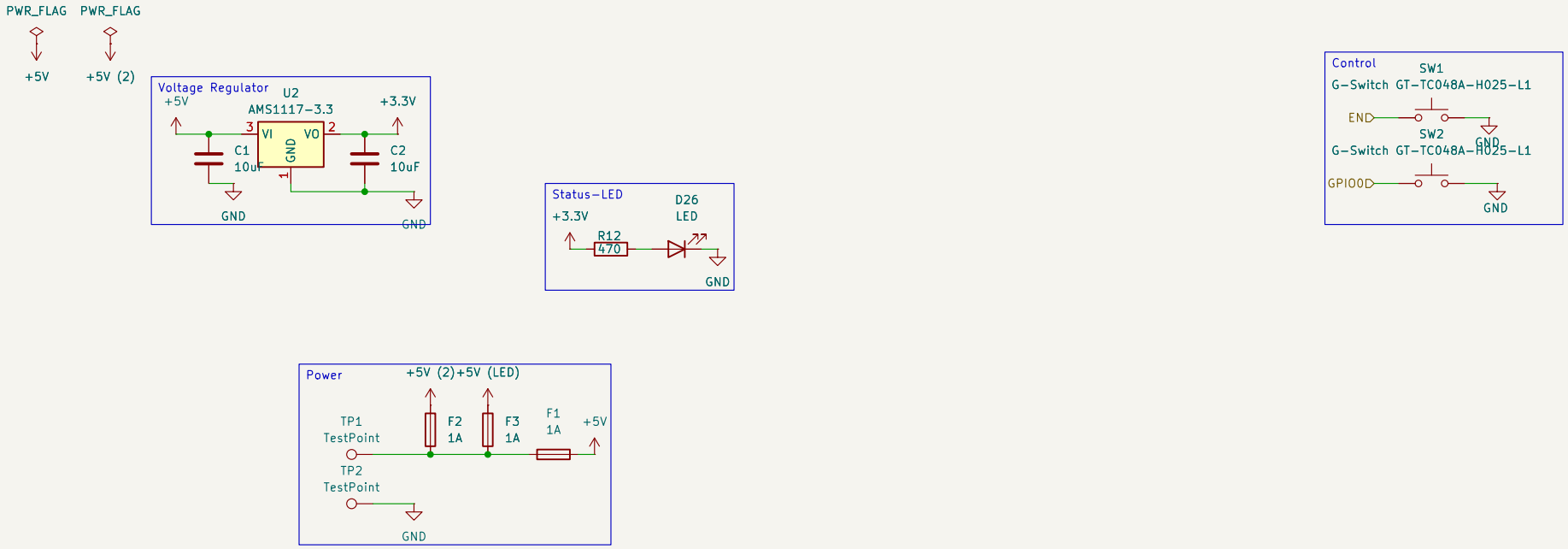

Leonie

Sheet: /Power_Control/
File: Power_Control.kicad_sch

Title: Hannah Satellite

Size: A4	Date: 2026-05-11	**Rev: 5**
KiCad E.D.A. 10.0.6		Id: 6/6