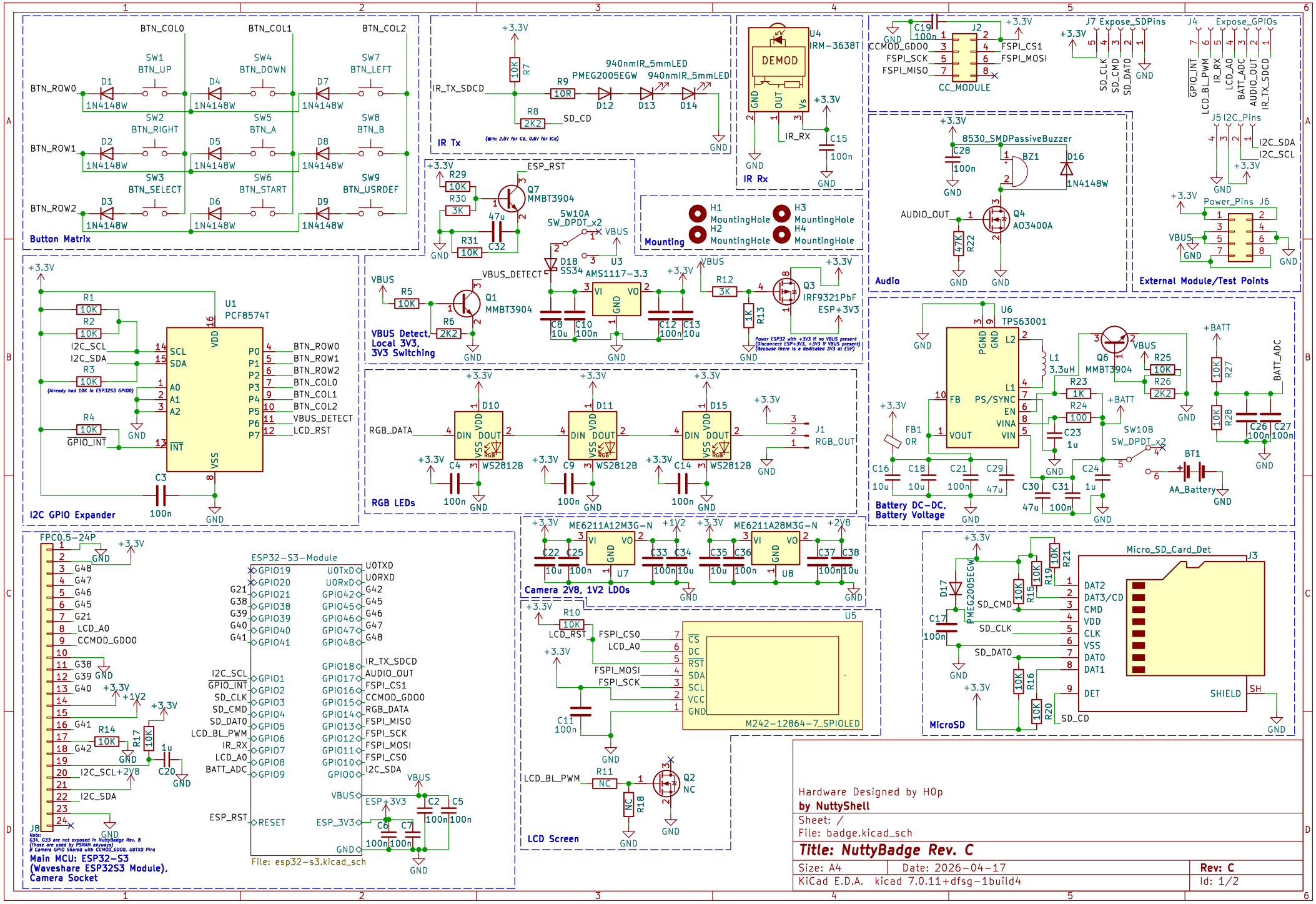
Button Matrix
BTN_COL0
BTN_COL1
BTN_COL2
BTN_ROW0
BTN_ROW1
BTN_ROW2
SW1 BTN_UP
SW4 BTN_DOWN
SW7 BTN_LEFT
SW2 BTN_RIGHT
SW5 BTN_A
SW8 BTN_B
SW3 BTN_SELECT
SW6 BTN_START
SW9 BTN_USRDEF
D1 D2 D3 D4 D5 D6 D7 D8 D9
1N4148W
IR Tx
IR_TX_SDCD
R7 10K
R9 10R
R8 2K2
SD_CD
PMEG2005EGW
940nmIR_5mmLED
D12 D13 D14
(@in: 2.5V for Cd, 0.6V for ICd)
IR Rx
U4 IRM-3638T
DEMOD
GND OUT Vs
IR_RX
C15 100n
Mounting
H1 MountingHole
H2 MountingHole
H3 MountingHole
H4 MountingHole
J2 CC_MODULE
CCMOD_GDO0
FSPI_SCK
FSPI_MISO
FSPI_CS1
FSPI_MOSI
C19 100n
J7 Expose_SDPins
SD_CLK
SD_CMD
SD_DAT0
J4 Expose_GPIOs
GPIO_INT
LCD_BL_PWM
IR_RX
LCD_A0
BATT_ADC
AUDIO_OUT
IR_TX_SDCD
J5 I2C_Pins
I2C_SDA
I2C_SCL
Audio
8530_SMDPassiveBuzzer
BZ1
D16 1N4148W
C28 100n
AUDIO_OUT
Q4 AO3400A
47K R22
External Module/Test Points
Power_Pins J6
VBUS
I2C GPIO Expander
U1 PCF8574T
R1 10K
R2 10K
R3 10K
R4 10K
I2C_SCL
I2C_SDA
GPIO_INT
(Already had 10K in ESP32S3 GPIO0)
SCL SDA A0 A1 A2 INT VDD VSS
P0 P1 P2 P3 P4 P5 P6 P7
BTN_ROW0
BTN_ROW1
BTN_ROW2
BTN_COL0
BTN_COL1
BTN_COL2
VBUS_DETECT
LCD_RST
C3 100n
VBUS Detect, Local 3V3, 3V3 Switching
R5 10K
R6 2K2
Q1 MMBT3904
VBUS_DETECT
D18 SS34
U3 AMS1117-3.3
VI VO GND
C8 10u
C10 100n
C12 100n
C13 10u
R12 3K
R13 1K
Q3 IRF9321PbF
ESP+3V3
Power ESP32 with +3V3 if no VBUS present (Disconnect ESP+3V3, +3V3 if VBUS present) (Because there is a dedicated 3V3 at ESP)
RGB LEDs
RGB_DATA
D10 D11 D15
DIN DOUT VDD VSS
WS2812B
C4 100n
C9 100n
C14 100n
J1 RGB_OUT
U6 TPS63001
PGND GND L2 L1 PS/SYNC EN VINA VIN FB VOUT
L1 3.3uH
FB1 0R
C16 10u
C18 10u
C21 100n
C29 47u
C23 1u
R23 1K
R24 100
Q6 MMBT3904
R25 10K
R26 2K2
+BATT
R27 10K
R28 10K
C26 100n
C27 100n
BATT_ADC
SW10B SW_DPDT_x2
BT1 AA_Battery
C24 1u
C30 47u
C31 100n
Battery DC-DC, Battery Voltage
FPC0.5-24P J8
G48 G47 G46 G45 G21 LCD_A0 CCMOD_GDO0 G38 G39 G40 G41 G42 I2C_SCL I2C_SDA
R14 10K
R17 10K
C20 1u
+1V2
+2V8
Note: G34, G33 are not exposed in NuttyBadge Rev. B (Those are used by PSRAM anyway) & Camera GPIO Shared with CCMOD_GDO0, U0TXD Pins
Main MCU: ESP32-S3 (Waveshare ESP32S3 Module), Camera Socket
ESP32-S3-Module
GPIO19 GPIO20 GPIO21 GPIO38 GPIO39 GPIO40 GPIO41
U0TxD U0RxD GPIO42 GPIO45 GPIO46 GPIO47 GPIO48
GPIO18 GPIO17 GPIO16 GPIO15 GPIO14 GPIO13 GPIO12 GPIO11 GPIO10 GPIO00
GPIO1 GPIO2 GPIO3 GPIO4 GPIO5 GPIO6 GPIO7 GPIO8 GPIO9
RESET
ESP_3V3
GND
U0TXD U0RXD G42 G45 G46 G47 G48 IR_TX_SDCD AUDIO_OUT FSPI_CS1 CCMOD_GDO0 RGB_DATA FSPI_MISO FSPI_SCK FSPI_MOSI FSPI_CS0 I2C_SDA
ESP+3V3
C2 100n
C5 100n
C6 100n
C7 100n
File: esp32-s3.kicad_sch
Camera 2V8, 1V2 LDOs
ME6211A12M3G-N
ME6211A28M3G-N
U7 U8
C22 10u
C25 100n
C33 100n
C34 10u
C35 10u
C36 100n
C37 100n
C38 10u
LCD Screen
U5 M242-12864-7_SPIOLED
CS DC RST SDA SCL VCC GND
R10 10K
LCD_RST
FSPI_CS0
LCD_A0
FSPI_MOSI
FSPI_SCK
C11 100n
LCD_BL_PWM
R11 NC
R18 NC
Q2 NC
MicroSD
Micro_SD_Card_Det J3
DAT2 DAT3/CD CMD VDD CLK VSS DAT0 DAT1 DET SHIELD
D17 PMEG2005EGW
C17 100n
R15 10K
R19 10K
R21 10K
R16 10K
R20 10K
SD_CMD
SD_CLK
SD_DAT0
SD_CD
Hardware Designed by H0p
by NuttyShell
Sheet: /
File: badge.kicad_sch
Title: NuttyBadge Rev. C
Size: A4
Date: 2026-04-17
Rev: C
KiCad E.D.A. kicad 7.0.11+dfsg-1build4
Id: 1/2

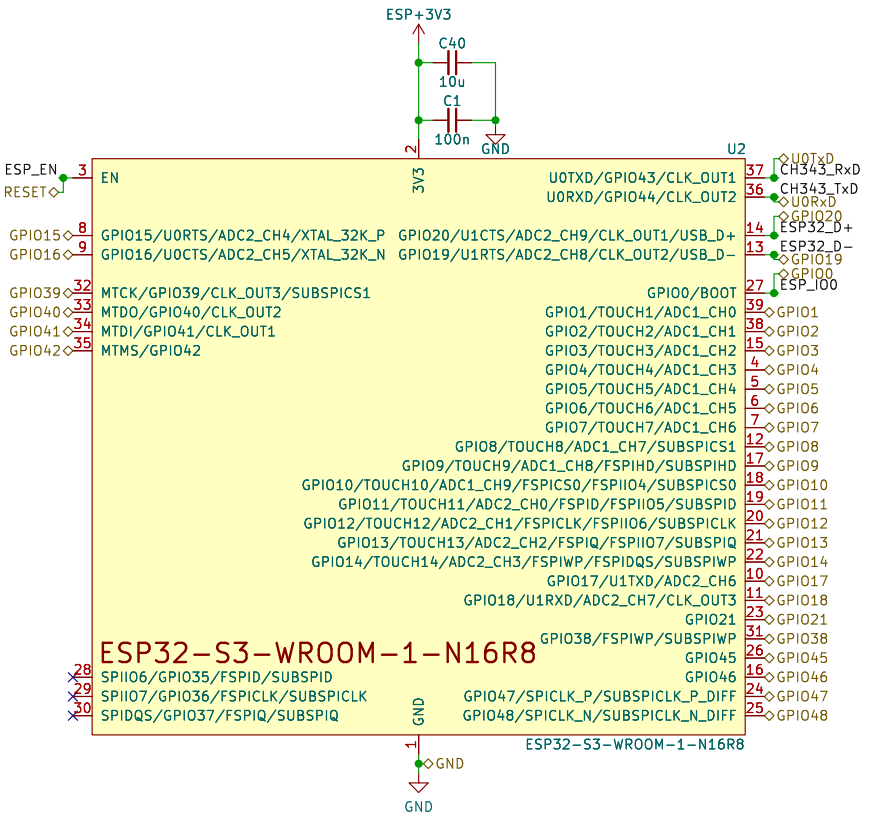

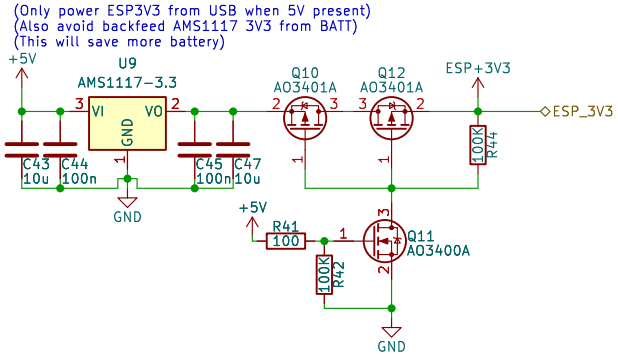

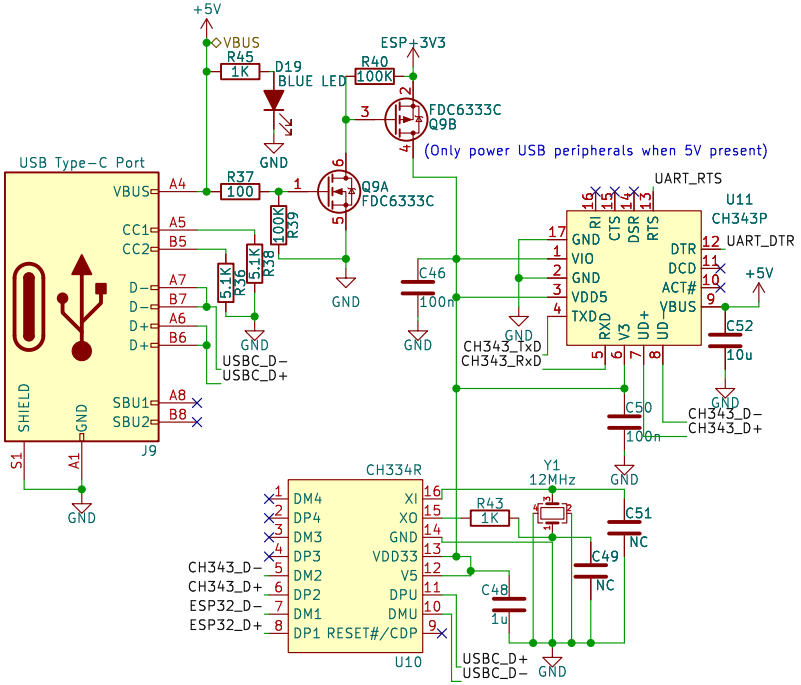

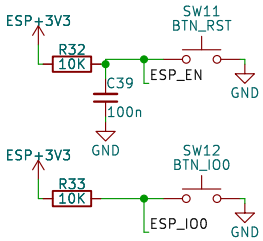

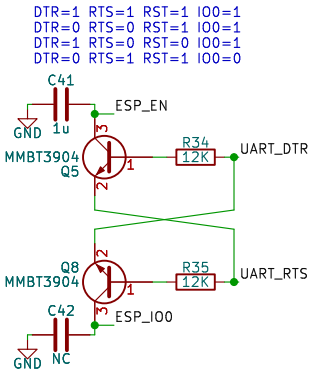

Sheet: /ESP32-S3-Module/
File: esp32-s3.kicad_sch

Title:

Size: A4	Date:	Rev:
KiCad E.D.A. kicad 7.0.11+dfsg-1build4		Id: 2/2