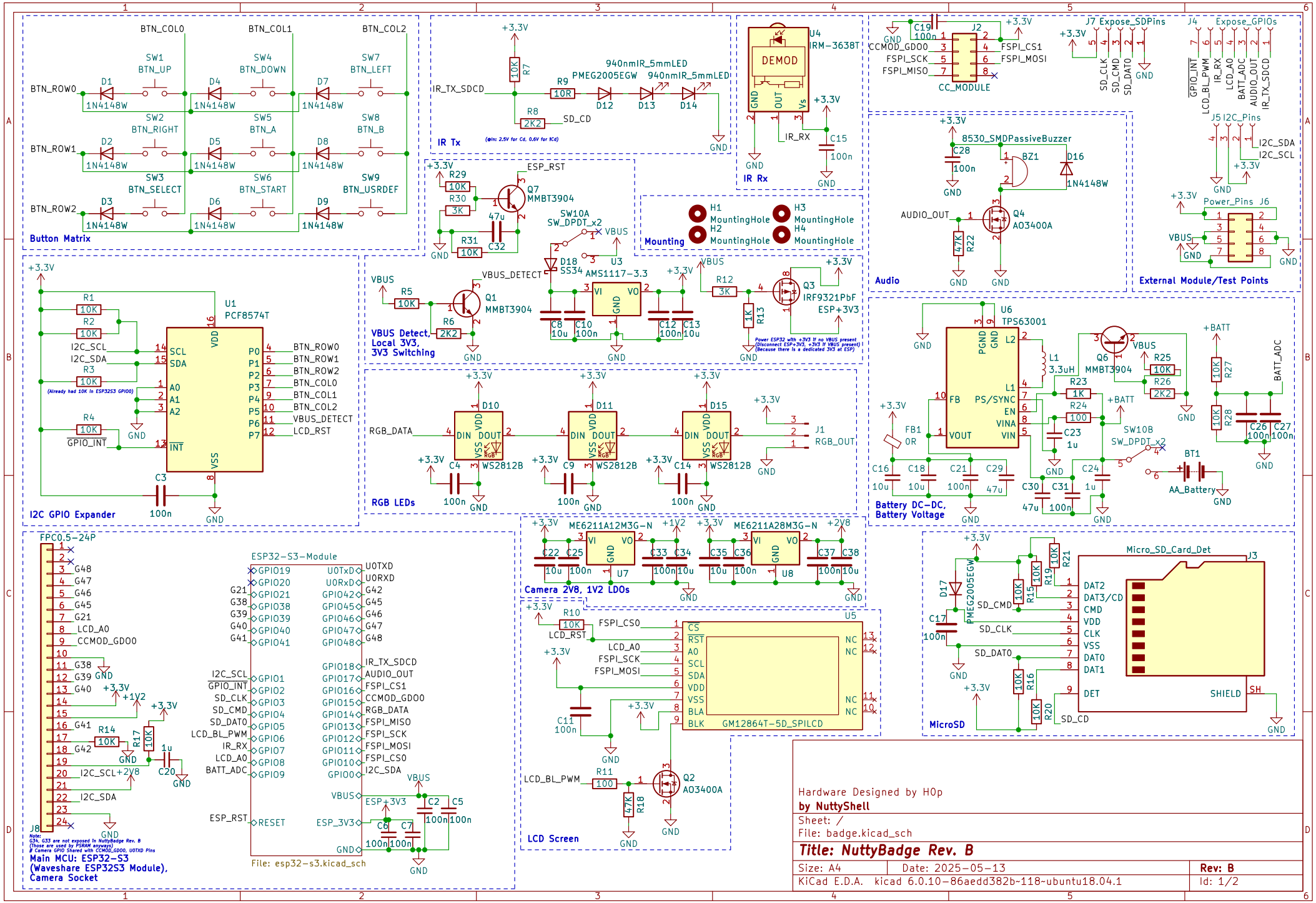
Button Matrix
BTN_COL0
BTN_COL1
BTN_COL2
BTN_ROW0
BTN_ROW1
BTN_ROW2
SW1 BTN_UP
SW2 BTN_RIGHT
SW3 BTN_SELECT
SW4 BTN_DOWN
SW5 BTN_A
SW6 BTN_START
SW7 BTN_LEFT
SW8 BTN_B
SW9 BTN_USRDEF
D1 D2 D3 D4 D5 D6 D7 D8 D9
1N4148W
IR Tx
IR_TX_SDCD
R7 10K
R8 2K2
R9 10R
SD_CD
PMEG2005EGW
940nmIR_5mmLED
D12 D13 D14
IR Rx
U4 IRM-3638T
DEMOD
IR_RX
C15 100n
CC_MODULE
J2
CCMOD_GDO0
FSPI_SCK
FSPI_MISO
FSPI_CS1
FSPI_MOSI
C19 100n
J7 Expose_SDPins
SD_CLK
SD_CMD
SD_DAT0
J4 Expose_GPIOs
GPIO_INT
LCD_BL_PWM
IR_RX
LCD_A0
BATT_ADC
AUDIO_OUT
IR_TX_SDCD
J5 I2C_Pins
I2C_SDA
I2C_SCL
Power_Pins J6
VBUS
Audio
8530_SMDPassiveBuzzer
BZ1
D16 1N4148W
C28 100n
Q4 AO3400A
R22 47K
External Module/Test Points
Mounting
H1 MountingHole
H2 MountingHole
H3 MountingHole
H4 MountingHole
ESP_RST
R29 10K
R30 3K
R31 10K
Q7 MMBT3904
C32 47u
SW10A SW_DPDT_x2
U3 AMS1117-3.3
D18 SS34
VBUS_DETECT
Q1 MMBT3904
R5 10K
R6 2K2
C8 10u
C10 100n
C12 100n
C13 10u
R12 3K
R13 1K
Q3 IRF9321PbF
ESP+3V3
Power ESP32 with +3V3 if no VBUS present (Disconnect ESP+3V3, +3V3 if VBUS present) (Because there is a dedicated 3V3 at ESP)
VBUS Detect, Local 3V3, 3V3 Switching
I2C GPIO Expander
U1 PCF8574T
R1 10K
R2 10K
R3 10K
R4 10K
(Already had 10K in ESP32S3 GPIO0)
GPIO_INT
C3 100n
P0 BTN_ROW0
P1 BTN_ROW1
P2 BTN_ROW2
P3 BTN_COL0
P4 BTN_COL1
P5 BTN_COL2
P6 VBUS_DETECT
P7 LCD_RST
RGB LEDs
RGB_DATA
D10 D11 D15
WS2812B
C4 C9 C14 100n
J1 RGB_OUT
Battery DC-DC, Battery Voltage
U6 TPS63001
L1 3.3uH
FB1 0R
C16 10u
C18 10u
C21 100n
C29 47u
C23 1u
C24 1u
C30 47u
C31 100n
Q6 MMBT3904
R23 1K
R24 100
R25 10K
R26 2K2
SW10B SW_DPDT_x2
BT1 AA_Battery
R27 10K
R28 10K
C26 100n
C27 100n
BATT_ADC
Camera 2V8, 1V2 LDOs
ME6211A12M3G-N
ME6211A28M3G-N
U7
U8
C22 10u
C25 100n
C33 100n
C34 10u
C35 10u
C36 100n
C37 100n
C38 10u
LCD Screen
U5 GM12864T-5D_SPILCD
R10 10K
C11 100n
R11 100
Q2 AO3400A
R18 47K
MicroSD
Micro_SD_Card_Det
J3
D17 PMEG2005EGW
C17 100n
R15 10K
R16 10K
R19 10K
R20 10K
R21 10K
DAT2
DAT3/CD
CMD
VDD
CLK
VSS
DAT0
DAT1
DET
SHIELD
SH
SD_CD
FPC0.5-24P
J8
Note: G34, G33 are not exposed in NuttyBadge Rev. B (Those are used by PSRAM anyways) & Camera GPIO Shared with CCMOD_GDO0, U0TXD Pins
Main MCU: ESP32-S3 (Waveshare ESP32S3 Module), Camera Socket
ESP32-S3-Module
U0TXD
U0RXD
IR_TX_SDCD
AUDIO_OUT
FSPI_CS1
CCMOD_GDO0
RGB_DATA
FSPI_MISO
FSPI_SCK
FSPI_MOSI
FSPI_CS0
I2C_SDA
ESP+3V3
ESP_3V3
C2 100n
C5 100n
C6 100n
C7 100n
File: esp32-s3.kicad_sch
Hardware Designed by H0p
by NuttyShell
Sheet: /
File: badge.kicad_sch
Title: NuttyBadge Rev. B
Size: A4
Date: 2025-05-13
Rev: B
KiCad E.D.A. kicad 6.0.10-86aedd382b-118~ubuntu18.04.1
Id: 1/2

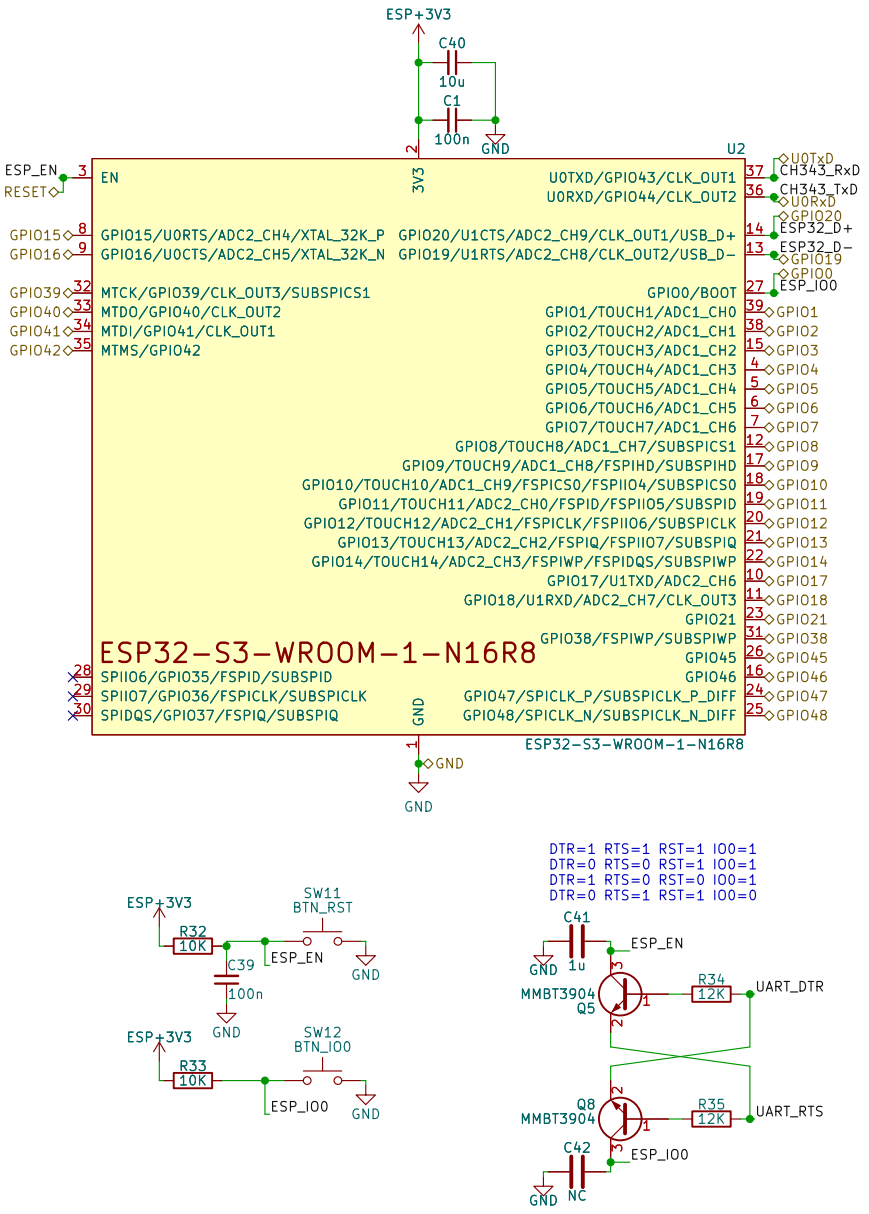

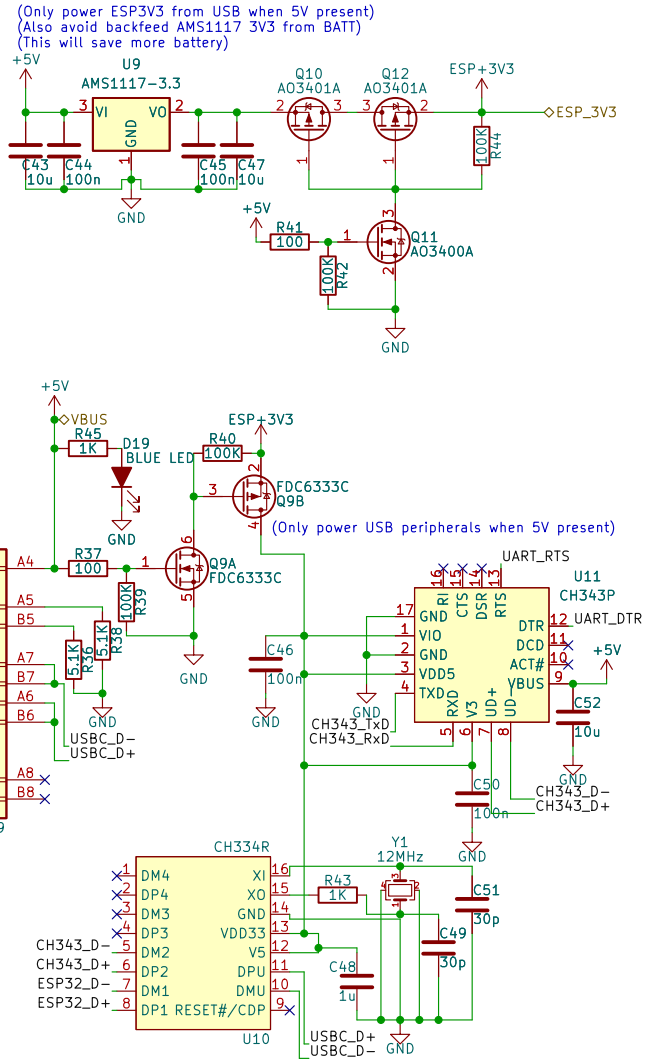

Sheet: /ESP32-S3-Module/
File: esp32-s3.kicad_sch

Title:

Size: A4	Date:	Rev:
KiCad E.D.A. kicad 6.0.10-86aedd382b-118~ubuntu18.04.1		Id: 2/2