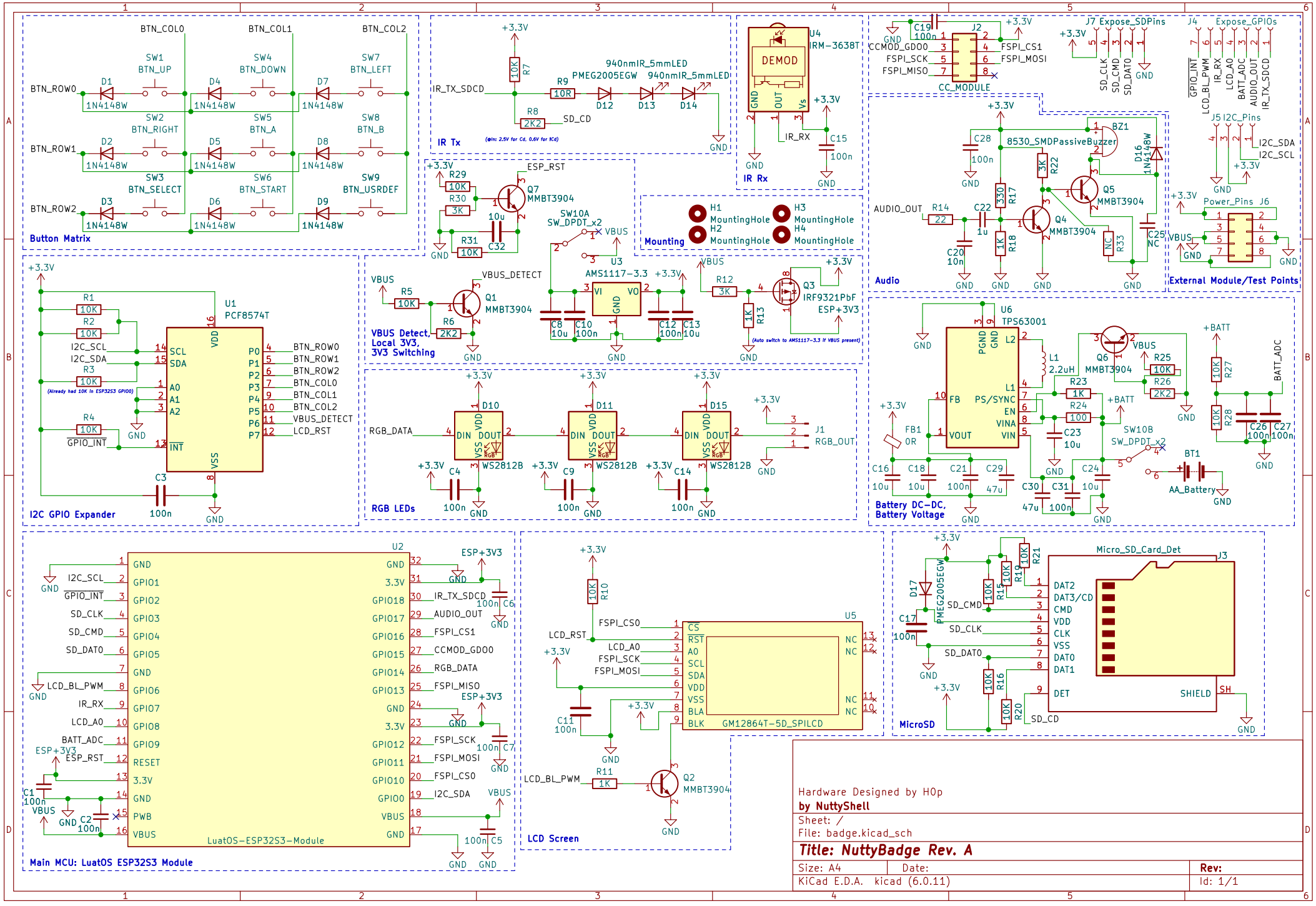
Button Matrix
BTN_COL0
BTN_COL1
BTN_COL2
BTN_ROW0
BTN_ROW1
BTN_ROW2
SW1 BTN_UP
SW4 BTN_DOWN
SW7 BTN_LEFT
SW2 BTN_RIGHT
SW5 BTN_A
SW8 BTN_B
SW3 BTN_SELECT
SW6 BTN_START
SW9 BTN_USRDEF
D1 D2 D3 D4 D5 D6 D7 D8 D9
1N4148W
IR Tx
IR_TX_SDCD
R7 10K
R9 10R
R8 2K2
SD_CD
D12 D13 D14
940nmIR_5mmLED
PMEG2005EGW
(@In: 2.5V for Cd, 0.6V for ICd)
IR Rx
U4 IRM-3638T
DEMOD
GND OUT Vs
IR_RX
C15 100n
Mounting
H1 MountingHole
H2 MountingHole
H3 MountingHole
H4 MountingHole
Q7 MMBT3904
R29 10K
R30 3K
R31 10K
C32 10u
ESP_RST
SW10A SW_DPDT_x2
VBUS
U3 AMS1117-3.3
C8 10u
C10 100n
C12 100n
C13 10u
VBUS Detect, Local 3V3, 3V3 Switching
Q1 MMBT3904
R5 10K
R6 2K2
VBUS_DETECT
Q3 IRF9321PbF
R12 3K
R13 1K
ESP+3V3
(Auto switch to AMS1117-3.3 if VBUS present)
I2C GPIO Expander
U1 PCF8574T
R1 10K
R2 10K
R3 10K
R4 10K
I2C_SCL
I2C_SDA
GPIO_INT
(Already had 10K in ESP32S3 GPIO0)
SCL SDA A0 A1 A2 INT VDD VSS
P0 P1 P2 P3 P4 P5 P6 P7
BTN_ROW0
BTN_ROW1
BTN_ROW2
BTN_COL0
BTN_COL1
BTN_COL2
VBUS_DETECT
LCD_RST
C3 100n
RGB LEDs
RGB_DATA
D10 D11 D15
DIN DOUT VDD VSS
WS2812B
C4 100n
C9 100n
C14 100n
J1 RGB_OUT
Audio
J2 CC_MODULE
CCMOD_GDO0
FSPI_SCK
FSPI_MISO
FSPI_CS1
FSPI_MOSI
C19 100n
J7 Expose_SDPins
SD_CLK
SD_CMD
SD_DAT0
J4 Expose_GPIOs
GPIO_INT
LCD_BL_PWM
IR_RX
LCD_A0
BATT_ADC
AUDIO_OUT
IR_TX_SDCD
BZ1 8530_SMDPassiveBuzzer
D16 1N4148W
Q5 MMBT3904
Q4 MMBT3904
R22 3K
R17 330
R18 1K
R33 NC
C25 NC
C28 100n
C22 1u
C20 10n
R14 22
AUDIO_OUT
External Module/Test Points
J5 I2C_Pins
I2C_SDA
I2C_SCL
J6 Power_Pins
Battery DC-DC, Battery Voltage
U6 TPS63001
PGND GND L2 L1 PS/SYNC EN VINA VIN FB VOUT
L1 2.2uH
FB1 0R
C16 10u
C18 10u
C21 100n
C29 47u
C23 10u
C30 47u
C31 100n
C24 10u
R23 1K
R24 100
R25 10K
R26 2K2
Q6 MMBT3904
SW10B SW_DPDT_x2
BT1 AA_Battery
R27 10K
R28 10K
C26 100n
C27 100n
BATT_ADC
Main MCU: LuatOS ESP32S3 Module
U2 LuatOS-ESP32S3-Module
GND GPIO1 GPIO2 GPIO3 GPIO4 GPIO5 GPIO6 GPIO7 GPIO8 GPIO9 RESET 3.3V PWB VBUS
3.3V GPIO18 GPIO17 GPIO16 GPIO15 GPIO14 GPIO13 GPIO12 GPIO11 GPIO10 GPIO0
I2C_SCL
GPIO_INT
SD_CLK
SD_CMD
SD_DAT0
LCD_BL_PWM
IR_RX
LCD_A0
BATT_ADC
ESP_RST
IR_TX_SDCD
AUDIO_OUT
FSPI_CS1
CCMOD_GDO0
RGB_DATA
FSPI_MISO
FSPI_SCK
FSPI_MOSI
FSPI_CS0
I2C_SDA
C1 100n
C2 100n
C5 100n
C6 100n
C7 100n
LCD Screen
U5 GM12864T-5D_SPILCD
CS RST A0 SCL SDA VDD VSS BLA BLK
NC
R10 10K
R11 1K
Q2 MMBT3904
C11 100n
MicroSD
J3 Micro_SD_Card_Det
DAT2 DAT3/CD CMD VDD CLK VSS DAT0 DAT1 DET SHIELD
D17 PMEG2005EGW
C17 100n
R15 10K
R19 10K
R21 10K
R16 10K
R20 10K
SD_CMD
SD_CLK
SD_DAT0
SD_CD
Hardware Designed by H0p
by NuttyShell
Sheet: /
File: badge.kicad_sch
Title: NuttyBadge Rev. A
Size: A4
Date:
Rev:
KiCad E.D.A. kicad (6.0.11)
Id: 1/1