Look at AG02 chip
http://mu.elecfans.net/201709/XR001%20VGA-VR1.0%20-.pdf
for display

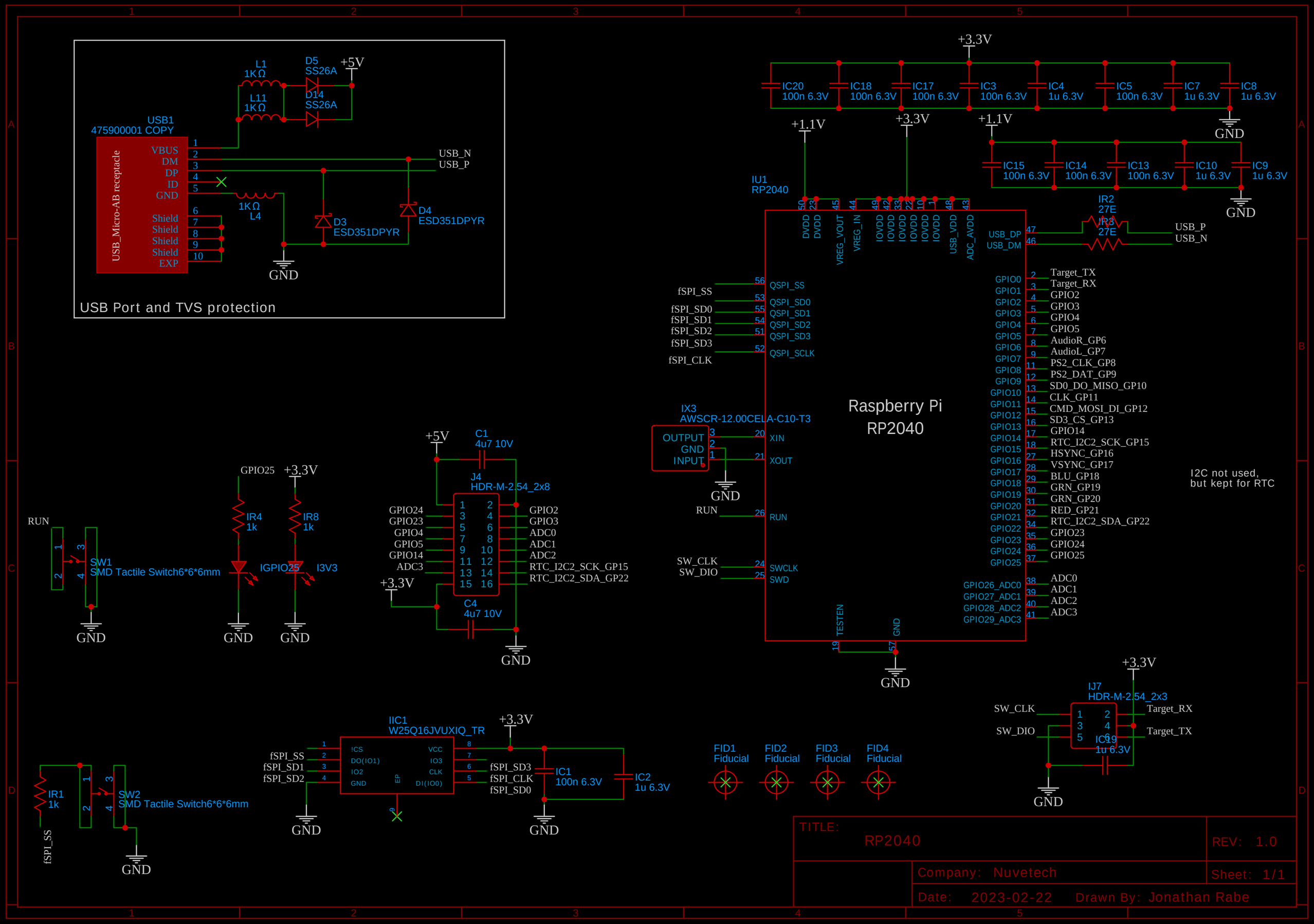

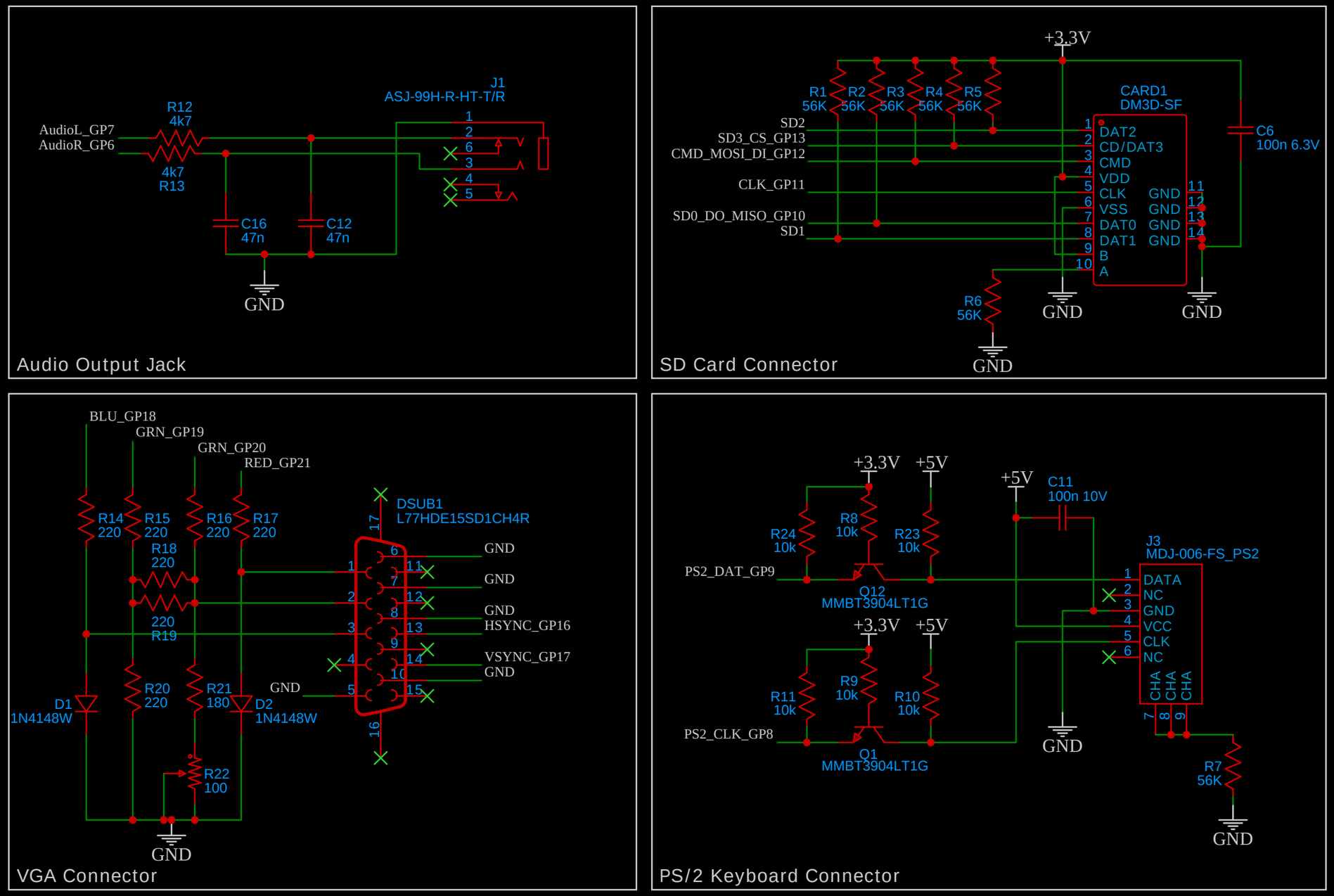

TITLE: Keyboard, SD card, VGA, Audio	REV: 1.0
Company: Nuvetech	Sheet: 1/1
Date: 2023-02-22 Drawn By: Jonathan Rabe	

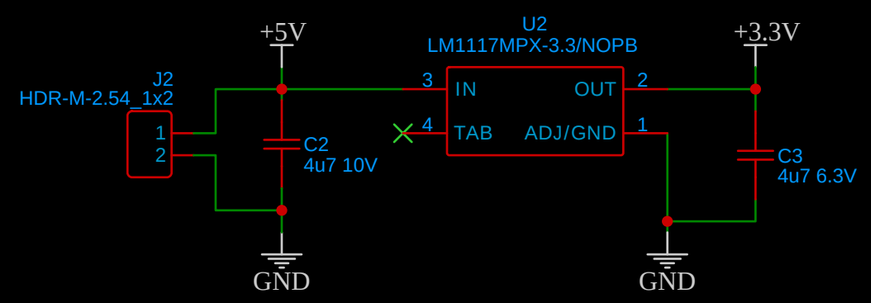

TITLE: Power management		REV: 1.0
	Company: Nuvetech	Sheet: 1/1
	Date: 2023-02-22 Drawn By: Jonathan Rabe	