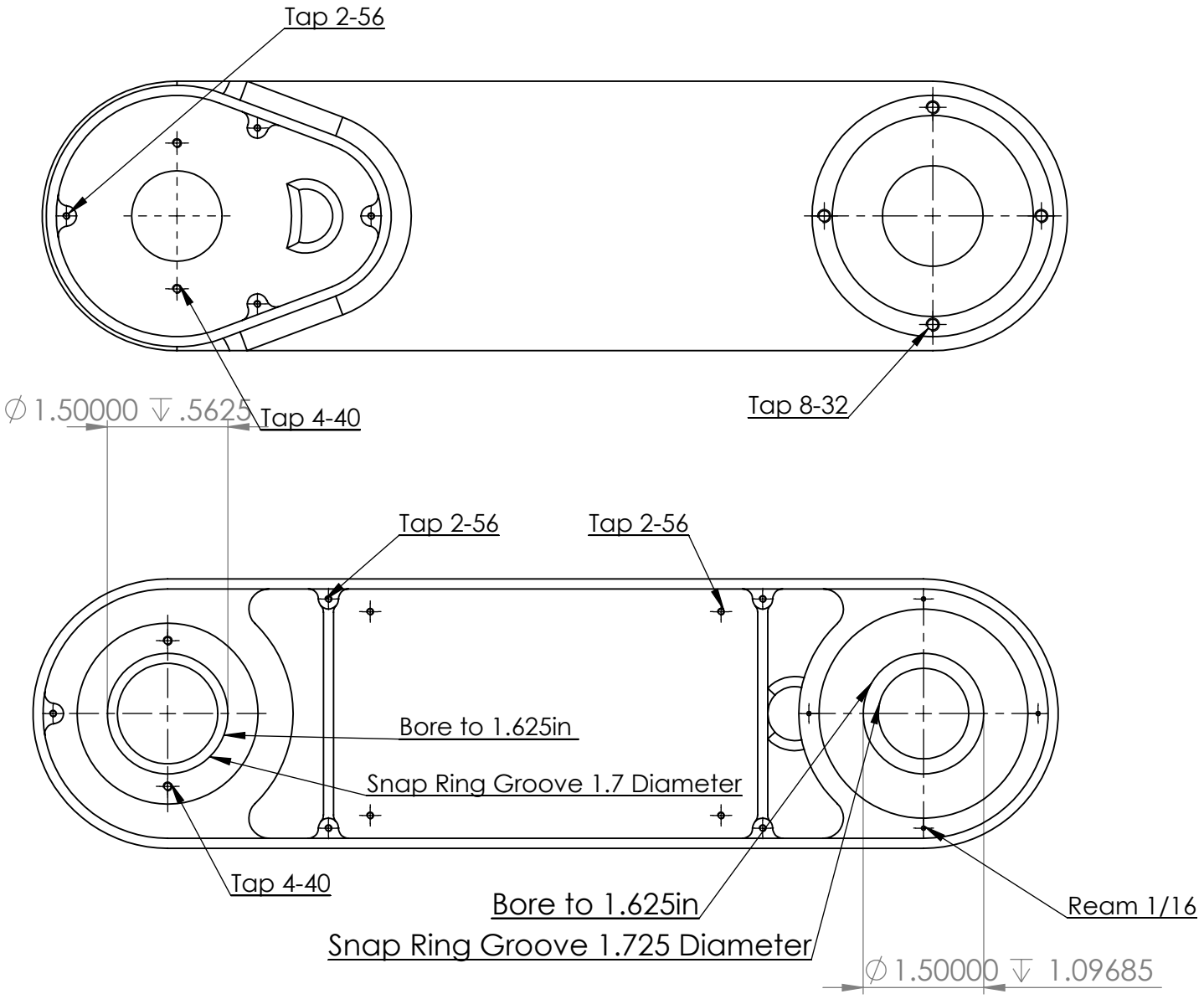

UNLESS OTHERWISE SPECIFIED: DIMENSIONS ARE IN **INCHES** SURFACE FINISH: TOLERANCES: LINEAR: ANGULAR:	FINISH:			DEBUR AND BREAK SHARP EDGES	DO NOT SCALE DRAWING	REVISION
	NAME	SIGNATURE	DATE		TITLE:	
DRAWN						
CHK'D						
APPV'D						
MFG						
Q.A				MATERIAL:	DWG NO.	A4
					Wall Link Frame (Undersized Ho	
				WEIGHT:	SCALE:1:5	SHEET 1 OF 1