STRAND 3: MEASUREMENT

Area

Unit Conversion of Area

Meaning of of area

- The area of a plane shape is the amount of the surface enclosed within its boundaries.
- It is normally measured in square units. For example, a square of sides 5 cm has an area of 5 x 5 = 25 cm^2 • A square of sides 1m has an area of $1m^2$, while a square of side 1km has an area of $1km^2$

Conversion of units of area

$1\ m^2 = 1m \times 1m$
$= 100\ cm \times 100\ cm$
$= 10\ 000\ cm^2$

$1\ km^2 = 1\ km \times 1\ km$
$= 1\ 000\ m \times 1\ 000\ m$
$= 1\ 000\ 000\ m^2$

$1\ area = 10\ m \times 10\ m$
$= 100\ m^2$

$1\ hectare\ (ha) = 100\ Ares = 10\ 000\ m^2$

Example

Convert the following into the unit stated in bracket

2 m^2 (cm^2)

Solution

$2\ m^2 = 2m \times 2m$
$= 200\ cm \times 200\ cm$
$= 40\ 000\ cm^2$

Assignments

Convert each of the following into the units stated in the brackets:

(1). 6.8 ha (cm^2)

(2). 4 km^2 (m^2)

(3). 9000m² (ha)

(4). 300 cm² (m²)

(5). 0.45 ha (m²)

(6). 120 are (ha)

(7). 5000m² (km²)

(8). 560 m² (cm²)

(9). 0.02 km ²(m²)

(10). 120,000 cm² (km²)

Area of a Rectangle

AREA OF A RECTANGLE

- A rectangle is closed flat shape, having four sides, and each angle equal to 90 degrees. The opposite sides of the rectangle are equal and parallel.

Consider the figure below:

Formula

The area of a rectangle is given by:

Area = Length *x* Width

= L *x* W

Example

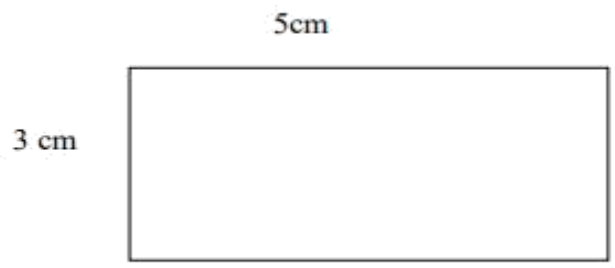

Area,

A = 5 x 3 cm

= $15c^2$

ASSIGNMENT

(1). The length of a rectangle is three times its breadth finds its area.

(2). A flower-bed measuring 3 m by 1.5 m is surrounded by a path 1 m wide. Find the area of the path.

(3). The length of a rectangle is twice its width. If its perimeter is 24 cm, what is the area of the rectangle?

(4). The length of a rectangle is three times its breadth. Find its area.

(5). What is the area in hectares of a rectangular ranch which is 50 km long and 15 km wide?

(6). A rectangular plot measures 100 m by 200 m find its area.

(7). A photograph measuring 14 cm by 10 cm is fixed inside a rectangular frame of dimensions 24 cm by 18 cm.
What is the background area not covered by the mat.

(8). What is the area of a rectangular table top with a length of 130 cm and a width of 110 cm?

(9). A flower-bed measuring 3 m by 1.5 m is surrounded by a path 1m wide. Find the area of the path.

(10). A residential estate is to be developed on a 6-ha piece of land. If 1 500 m^2 is taken up by roads and the rest divided into 40 equal plots, what is the area of each plot?

Calculating the Area of a Triangle

Area of a Triangle

- A triangle is a three sided plane figure
- Area of a triangle is given by the formula;
- $A=\frac{1}{2}\times B\times H$
- A - Area of the triangle
- B - base length of the triangle
- h - height or altitude of the triangle

Example

The base of a rectangle is three times its height. Find its area given that its height is 4 cm

Solution

Base = 3(h)

20. 3 x 4

21. 12cm

4. $=\frac{1}{2}\times B\times H$

$=\frac{1}{2}\times 12\times 4$

=

$24cm^2$

Assignment

(1). A photograph measuring 14 cm by 10 cm is fixed inside a triangular frame of height 24 cm and base 18 cm. What is the background area of the space not covered by the photograph?

(2). A plot in the shape of right angled triangle 300 m by 400 m by 500 m. Find its area hectares.

(3). A triangular mat measuring 0.7 m by 2.4 m 2.5 m covers an area inside a floor measuring 14 m by 12 m. Find the area not covered by the mat.

(4). The height of a triangle is three times its base. If its area is 24 cm. what is the height of the triangle?

(5). The area of a right angled triangle whose sides are x, 2x and x - 5 cm is $24cm^2$. Find the exact value for the height of the triangle.

(6). The area of 10 similar triangular plots is 16 000 ares. Find the in metres the longest side of each plot given that one of the shorter sides is three times the other.

(7). The area of a right-angled triangle whose sides are x cm. 5 cm and 13 cm is $30\ cm^3$. Find the perimeter of the triangle

(8). A triangle has an area of $23\ cm^2$. Find the base given that its height 5 cm.

(9). The height a triangle is 23 cm and base is 25cm. Find the area of 23 such triangles

(10). Find the area of each of the following shapes.

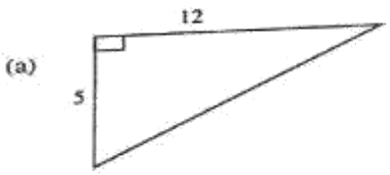

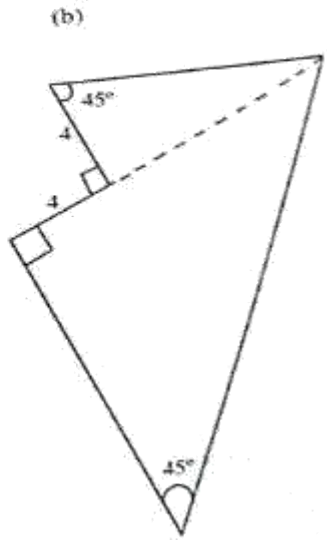

Area of a Parallelogram

AREA OF A PARALLELLOGRAM.

The area of a parallelogram is given by the formula:

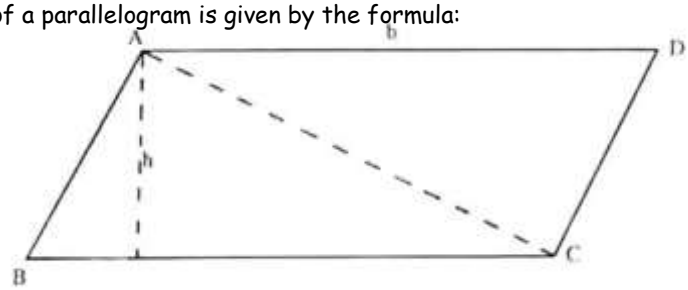

A = b x h

- Where ***b*** is the base of the parallelogram and ***h*** is the height.

Example

Find the area of a parallelogram with a base 6 cm and a height 4 cm.

Solution

Area of a parallelogram,

A = b × h

10. *6 (cm) × 4 (cm)*

$= 24\ cm^2$

Assignment

(1). Find the area of a parallelogram with a base of 5 cm and a height of 3 cm.

(2). Determine the area of a parallelogram with a base of 12 m and a height of 6 m.

(3). A parallelogram has a height of 10.5 m and an area of $94.5\ m^3$. What is the length of the base?

(4). Calculate the area of a parallelogram with a base of 8 cm and a height of 2 cm.

(5). Given that the base of a parallelogram is 15 m and a height of 10 m. Find the area of a parallelogram.

(6). If the area of a parallelogram is $48\ cm^2$ and the base is 8 cm, what is the height?

(7). Determine the area of a parallelogram with a base of 7 cm and a height of 9 cm.

(8). Find the height of a parallelogram with an area of $286\ cm^2$ and a base of 22 cm

(9). The area of a parallelogram is $144\ cm^2$ and the base is 12 cm. What is the height of the parallelogram?

(10). If the area of a parallelogram is $350\ cm^2$ and the base is 14 cm, what is the height?

Area of a Circle

A circle

- A round plane figure whose boundary (the **circumference)** consists of points **equidistant** from a fixed point (the centre).

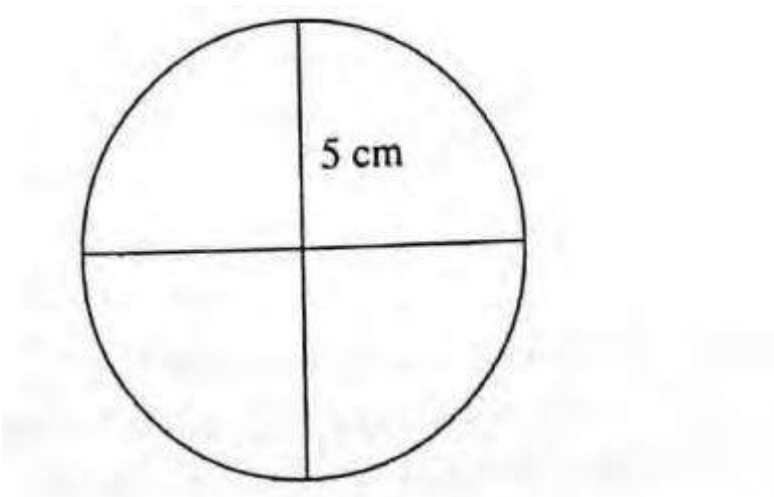

Area of a circle is given by the formula:

$A = \pi r^2$

Examples

Find the area of circle of radius 5cm

11. =

πr^2

=

$^{22}/$

$_7$

$\times 5^2$

=

78.

57c

m^2

<u>Assignment</u>

(1). A wire of length 44 cm is bent to form a complete circle, find the area of the circle.

(2). Find the area of a circle of diameter 14 cm.

(3). The radius of a circle is quarter of its circumference. Find the area of the circle given that the circumference of the circle is 20 cm.

(4). The area of a circle is 38.5 cm^2. Find the radius of the circle. (Take $\pi = {}^{22}/_7$).

(5). An arc PQ of a circle of radius 15 cm subtends an angle of 160° at the centre of the circle.

(6). Find the area of a circle of radius 10 cm correct to 2 significant figures. (Take = 3.142).

(7). Find the area of the shaded region

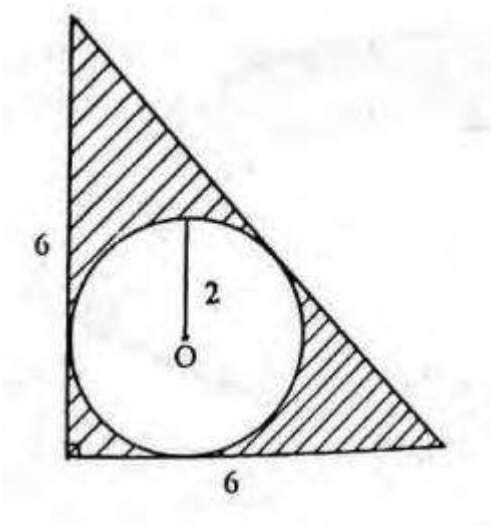

(8). Find the area of the shaded region.

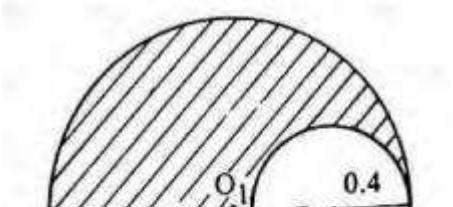

(9). Find the area of grass watered by a sprinkler which is capable of spraying to a maximum distance of 10 m.

(10). A goat is tethered to a post by a rope 6.3 m long. Find its maximum grazing area.

Area of a Sector

A sector :

- The plane figure enclosed by two **radii** of a circle and the arc between them.

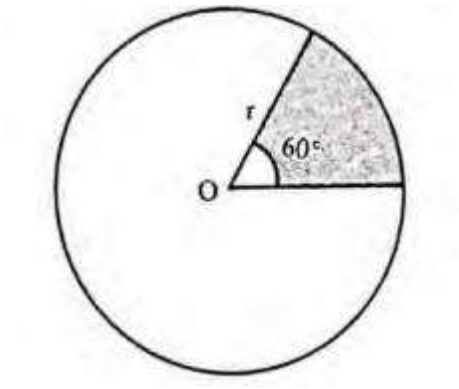

Area of a sector is given by the formula:

$$A = \frac{\theta}{360}\pi r^2$$

Examples;

Find the area of the sector of a circle of radius 3 cm if the angle subtended at the centre is 140°. (Take $\pi = {}^{22}/_{7}$)

$$A = \frac{\theta}{360}\pi r^2$$

20. ${}^{140}/_{360} \times {}^{22}/_{7} \times 3 \times 3$

21. 11 cm^2

Assignment

(1). The area of a sector of a circle is 38.5 cm^2. Find the radius of the circle if the angle subtended at the centre is 90° . (Take $\pi = {}^{22}/_{7}$)

(2). The area of a sector of a circle radius 63 cm is 4 158 cm^2. Calculate the angle subtended at the centre of the circle. (Take $\pi = {}^{22}/_{7}$)

(3). Find the area of the shaded area.

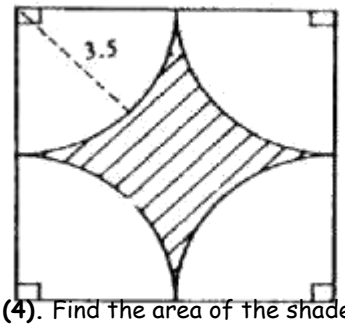

(4). Find the area of the shaded region in the figure below.

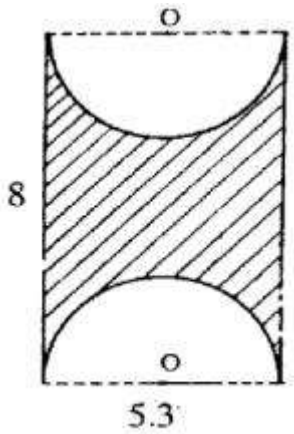

(5). The shaded region in the figure below shows the area swept out on a flat windscreen by a wiper. Calculate the area of the region.

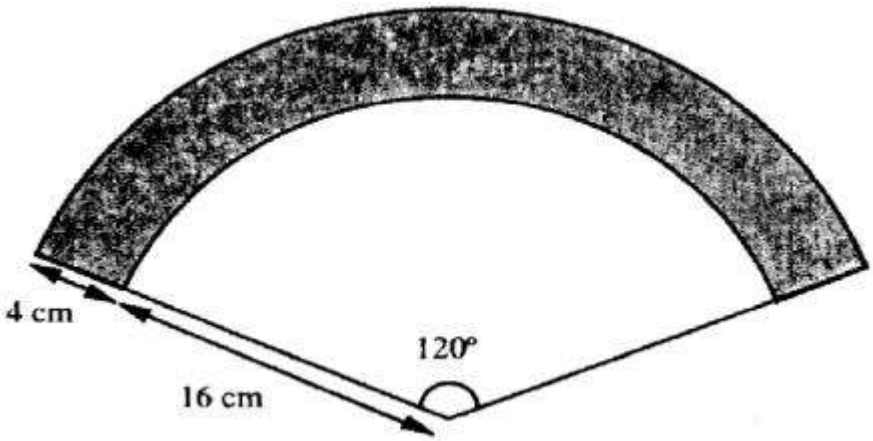

(6). Find the difference between the area swept out by the minute hand of a clock which is 3.6 cm long and the hour hand which is 2.9 cm long between a duration of 15 minutes.

(7). The length of a minute hand of a clock is 3.5 cm. Find the angle it turns through if it sweeps an area of 4.8 cm^2. (Take $\pi = {}^{22}/_{7}$)

(8). The perimeter of a quadrant of a circle is 50 cm^2. Find the area of the quadrant (a quadrant is a quarter of a circle). (Take $\pi = {}^{22}/_{7}$)

(9). The two arms of a pair of divider are spread so that the angle between them is 45°. Find the area of the sector formed if the length of each arm is 8.4 cm. (Take $\pi = {}^{22}/_{7}$)

(10). An arc PQ of a circle of radius 15 cm subtends an angle of 160° at the centre of the circle. Find the area of the sector formed by the arc PQ correct to 2 significant figures. (Take = 3.142).

Real Life Application of the Area of a Sector

A sector

- The plane figure enclosed by two **radii** of a circle and the arc between them.

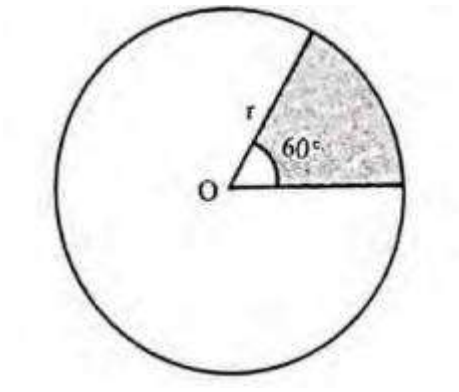

Area of a sector is given by the formula;

$$A = \frac{\theta}{360}\pi r^2$$

Example

Find the area of the shaded region.

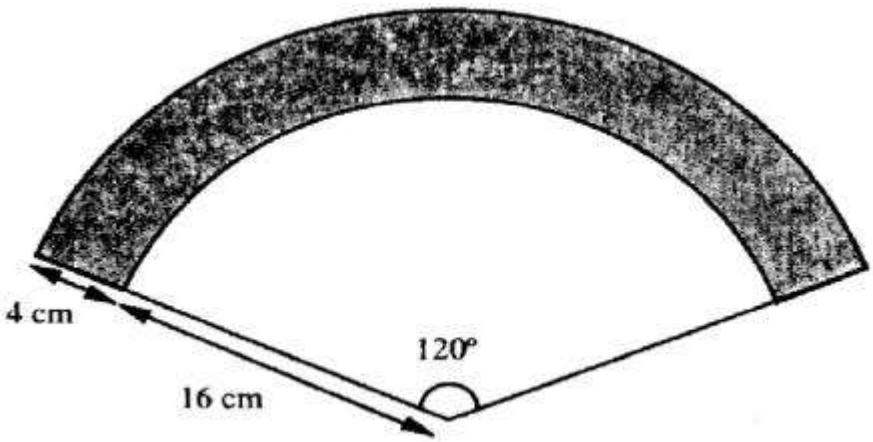

A=A1−A2

$$\frac{\theta}{360}\pi R^2 - \frac{\theta}{360}\pi r^2$$

22. $^{120}/_{360} \times {}^{22}/_{7} \times 20 \times 20 - {}^{120}/_{360} \times {}^{22}/_{7} \times 16 \times 16$
23. 419.047619 - 268.190476
24. 150.8571cm^2

Assignment

(1). Find the area of the shaded area.

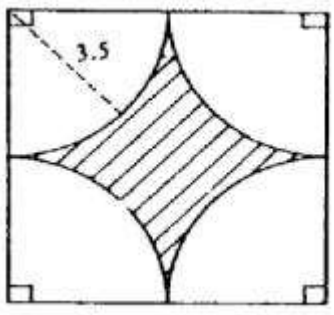

(2). Find the area of the shaded region in the figure below.

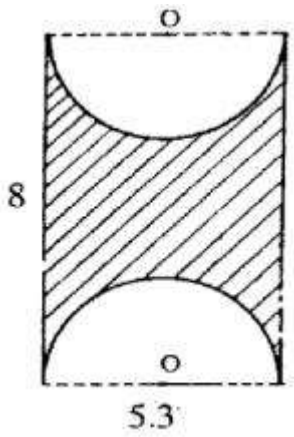

(3). Find the difference between the area swept out by the minute hand of a clock which is 3.5 cm long and the hour hand which is 4.9 cm long between a duration of 30minutes.

(4). The length of a minute hand of a clock is 3.5 cm. Find the angle it turns through if it sweeps an area of 44.8 cm^2. (Take $\pi = {}^{22}/_{7}$)

(5). The two arms of a pair of divider are spread so that the angle between them is 75°. Find the area of the sector formed if the length of each arm is 10.5 cm. (Take $\pi = {}^{22}/_{7}$)

(6). The area of the sector of a circle is 138.5 cm^2 . Find the radius of the circle if the angle subtended at the centre is 50°. (Take $\pi = {}^{22}/_{7}$).

(7). The perimeter of a quadrant of a circle is 50 cm. Find the radius of the quadrant (a quadrant is a quarter of a circle). Find the area of quadrant.

(8). The length of a minute hand of a clock is 10.5 cm. Find the angle it turns through if it sweeps an area of 4.8 cm^2. (Take $\pi = 3.142$)

(9). The difference between the area swept out by the minute hand of a clock is 3.6 cm^2. How long is the hour hand given the that the minute hand is 2.9 cm long and they both turn through an angle of 30°.

(10). Two equal sheets of metal in the shape of sectors and with radii 0.7 m are cut out from a rectangular sheet measuring 2 m by 3 m. Find the area of the remaining sheet. Given that the angle between their radii is 45°

Surface Area of a Prism

A PRISM

- A solid geometric figure whose two ends are similar, equal, and parallel rectilinear figures, and whose sides are parallelograms.

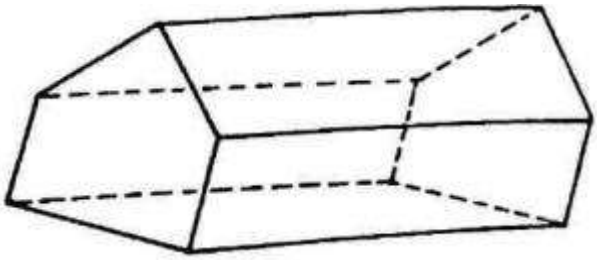

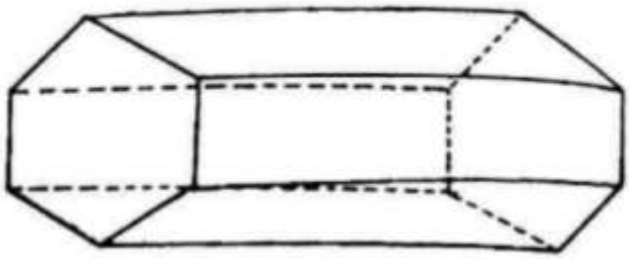

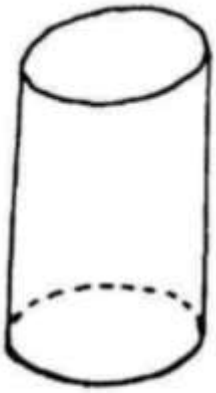

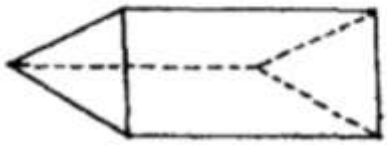

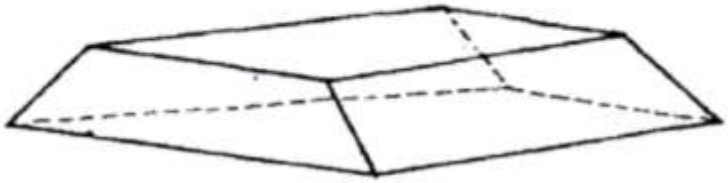

Total surface area of a prism is given by the formula:

A = 2(Cross sectional area) + Perimeter of cross section x Length of the prism.

Examples

Find the total surface of the triangular prism below.

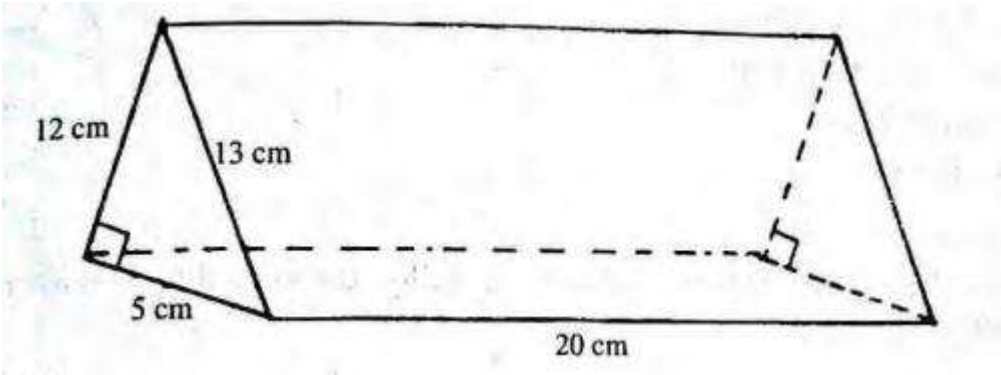

Solution

Cross sectional area = $\frac{1}{2} \times 5 \times 12$

= 30 cm^2

Perimeter of cross section

25. 5+12+13
26. 30 cm

22. 2(30) + 30 × 20

23. 60 + 600

24. 660 mcm^2

<u>Assignment</u>

(1). A right angled triangular prism has length 3 m, breadth 2 m and height 2.5 m. Find the total surface area of the prism.

(2). Find the total surface area of the prism below.

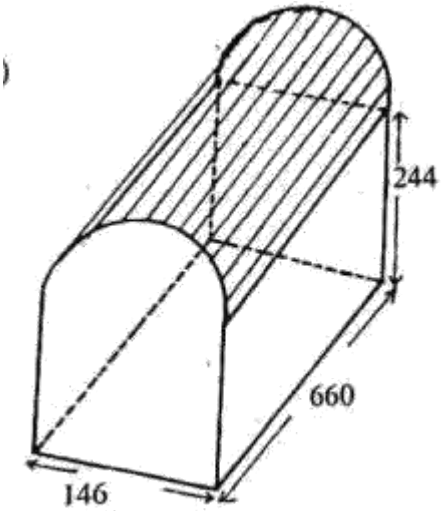

(3). Find the surface area of the prism

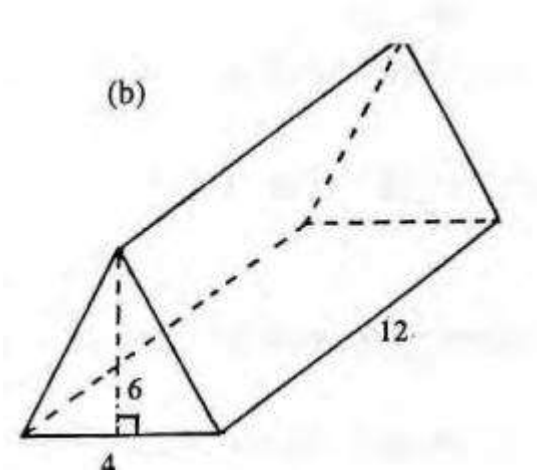

(4). Find the surface area of the prism.

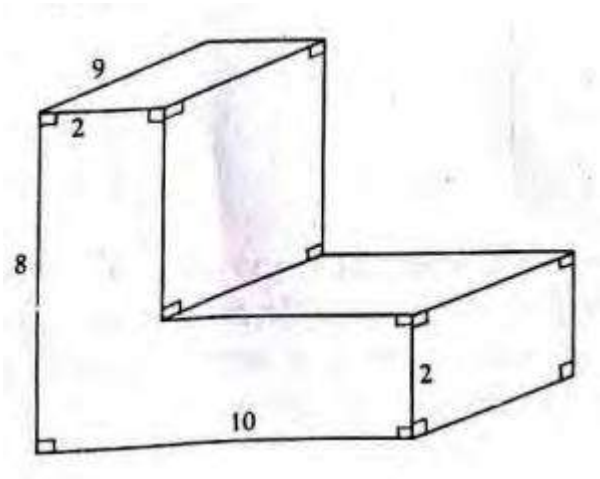

(5). What is the surface area of the solid below.

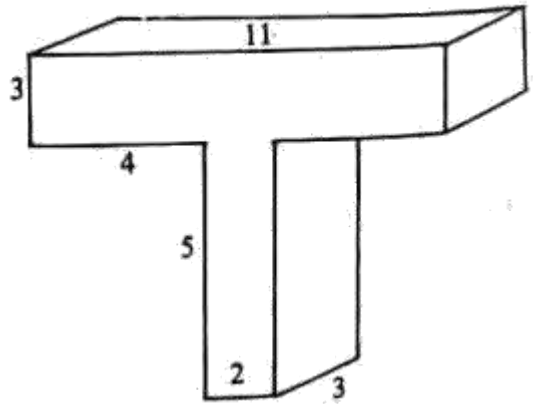

(6). Determine the surface area of the prism below.

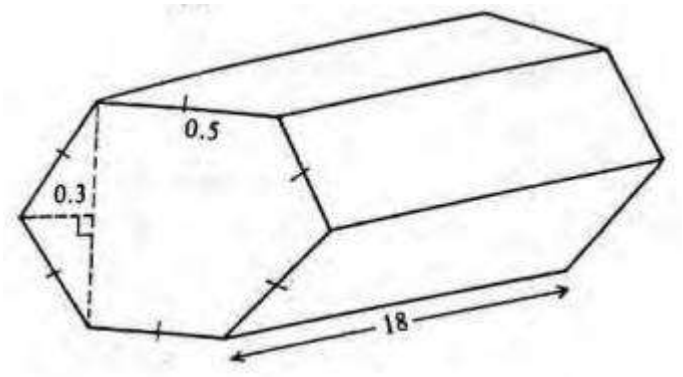

(7). Find the surface area of building block measuring 9 cm by 12 cm by 4 cm.

(8). What is the surface area of a rectangular eraser which measures 2.3 cm by 2 cm by 0.5 cm?

(9). An open chalk box is 15 cm long, 12 cm wide and 10 cm high. Find its external surface area.

(10). Find the surface area of a triangular prism of length 25 cm, height 4.5 cm and base 6 cm.

Surface Area of a Cylinder

A CYLINDER

- Cylinder is one of the basic 3d shapes, in geometry, which has two parallel circular bases at a distance. The two circular bases are joined by a curved surface, at a fixed distance from the center.

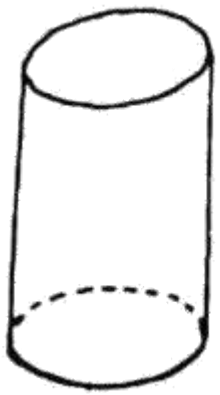

Total surface area of a cylinder is given by the formula:

A = 2(Cross sectional area) + Perimeter of cross section Length of the prism.

$= 2r^2 + 2rh$

Examples

Find the total surface of the closed cylinder below.

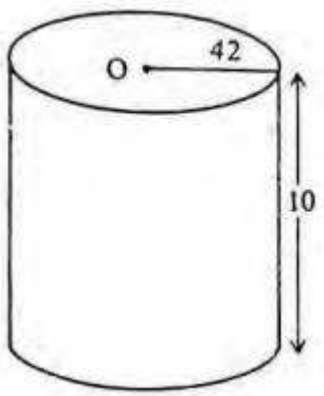

Solution

$A = 2r^2 + 2\pi rh$

(vi) $2 \times {}^{22}/_{7} \times 42^2 + 2 \times {}^{22}/_{7} \times 42 \times 10$

(vii) 11088 + 2640

(viii) $13720cm^2$

<u>Assignment</u>

(1). A cylindrical water-tank with no top was constructed at a dining hall corner. If the diameter of the tank was 2.8 m and height 4.8 m, what was its surface area?

(2). Find the number of revolutions made by a roller of diameter 1.02 m and thickness 1.3 m if it rolls over a surface of 291.72 m^2.

(3). Calculate the thickness of a disc of diameter 14 cm and surface area 352 cm^2.

(4). Two metallic pipes, each of length 3 m and external diameter 10 cm, are used as netball posts. Find their total external surface area.

(5). The diameter of a cylindrical unsharpened pencil is 8 mm and its length is 17.5 cm. Calculate its surface area.

(6). The Figure below shows cross-section of a ruler which is a rectangle of 2.5 cm by 0.2 cm on which is surmounted an isosceles trapezium (one in which the non-parallel sides area of equal length). The shorter of the parallel sides of the trapezium is 0.7 cm long. If the greatest height of the ruler is 0.4 cm and it is 33 cm long, calculate its surface area.

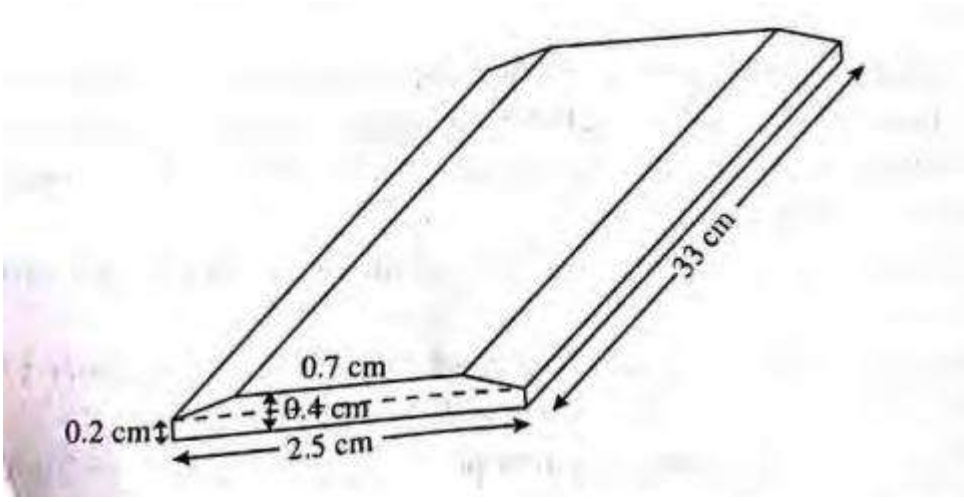

(7). Figure 13.24 shows a corrugated iron sheet made of sections, each of which is the minor are of a circle of radius 4.2 cm subtending an angle of 150° at the centre of the circle. If there are 50 sections and the sheet is 2 m long, calculate the area of the curved top surface of the sheet.

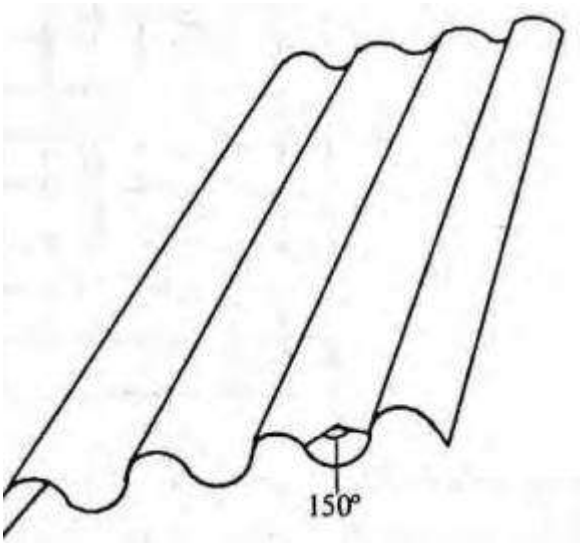

(8). A solid block in the shape of a cylinder has a height of 14 cm and a radius of 10cm, find the total surface area of the cylinder. (Take = $^{22}/_{7}$)

(9). A cylindrical container of diameter 14 cm and depth 20 cm is half full of juice. Calculate the area of the container not in contact with juice .

(10). The diameter of a cylindrical container, closed at both ends is 0.28 m and its height is 14 m. Find its surface area.

Area of Irregular Shapes

Area of Irregular Shapes

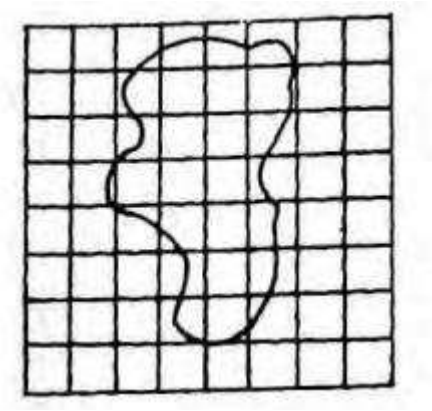

Area of irregular figure cannot be found accurately, but it can be the area of an estimated as follows:

- Draw a grid of unit squares on the figure or copy the figure on such a grid. As indicated in the figure below.
- Count all the unit squares fully enclosed within the figure.
- Count all the partially enclosed unit squares and divide the total by two, i.e., treat each one of them as half of a unit square.
- The sum of the numbers in (2) and (3) gives an estimate of the area of the figure.

From the figure,

The number of full squares is 9.

Number of partial squares = 18

Total number of squares = $9 + \frac{1}{2} \times 18$

7. 9 + 9

8. 18 Square units

Assignment

(1). Trace the outline of the palm of your hand on a graph paper and estimate its area and estimate the area of the outline using the counting technique.

(2). Trace the outline for your foot and estimate the area of the outline using the counting technique.

(3). Estimate the area of the shape below.

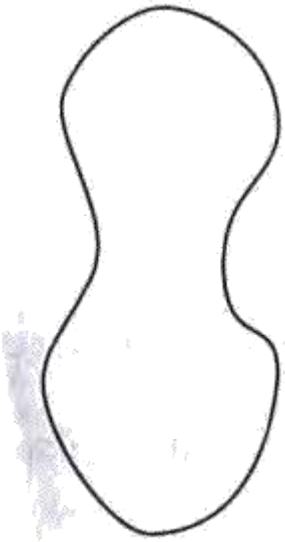

(4). Estimate the area of the figure below by drawing a grid of unit square on the figure below.

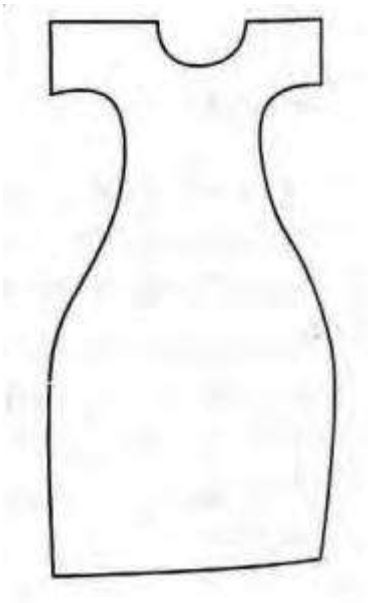

(5). Estimate the area of the outline below.

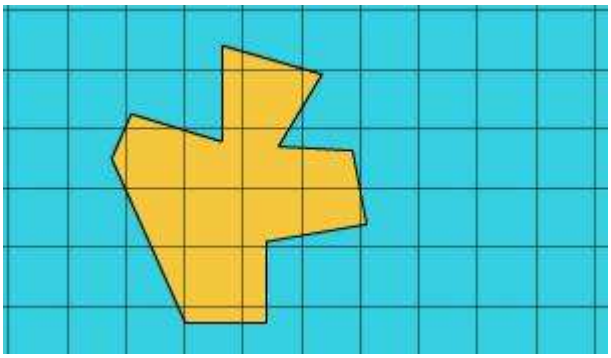

(6). Find the area of the outline in the figure below.

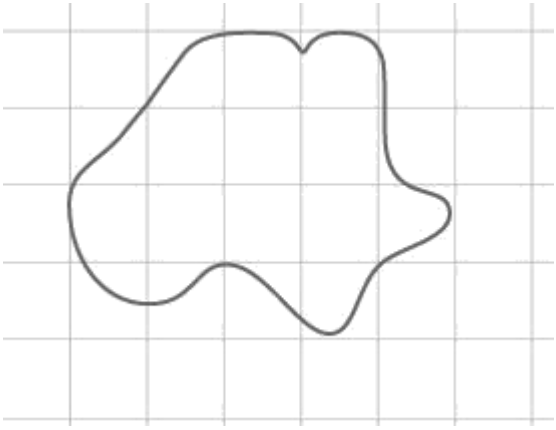

(7). Estimate the area of the figure below.

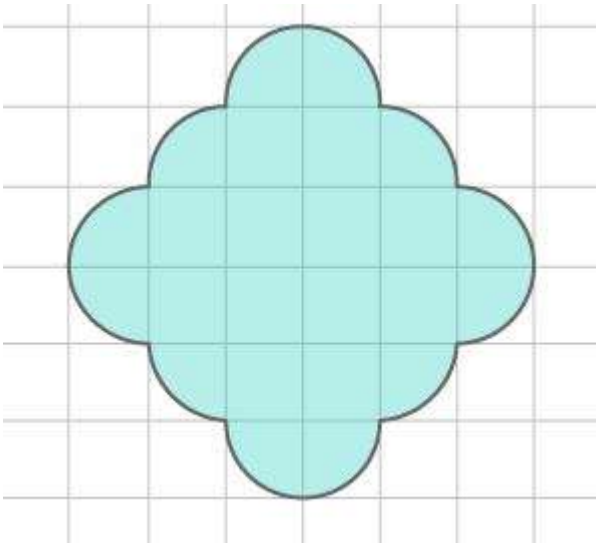

(8). Estimate the area of the outline.

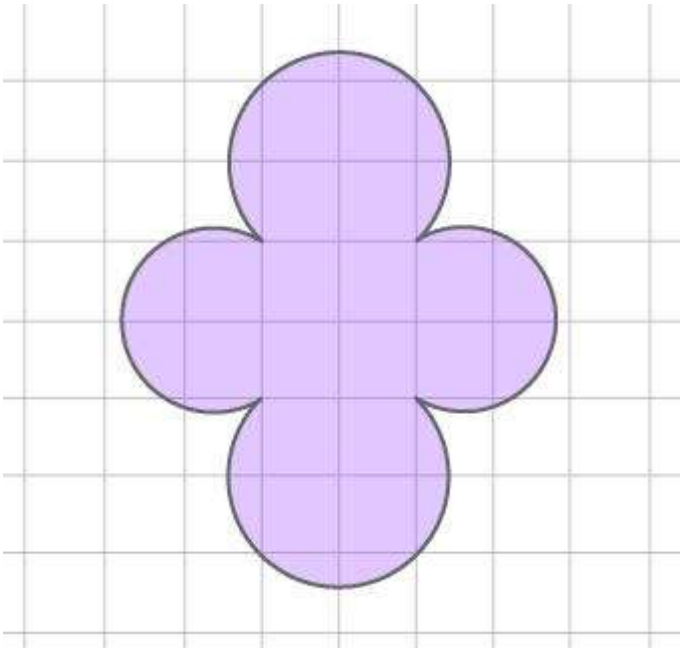

(9). Find the area of the figure in the outline.

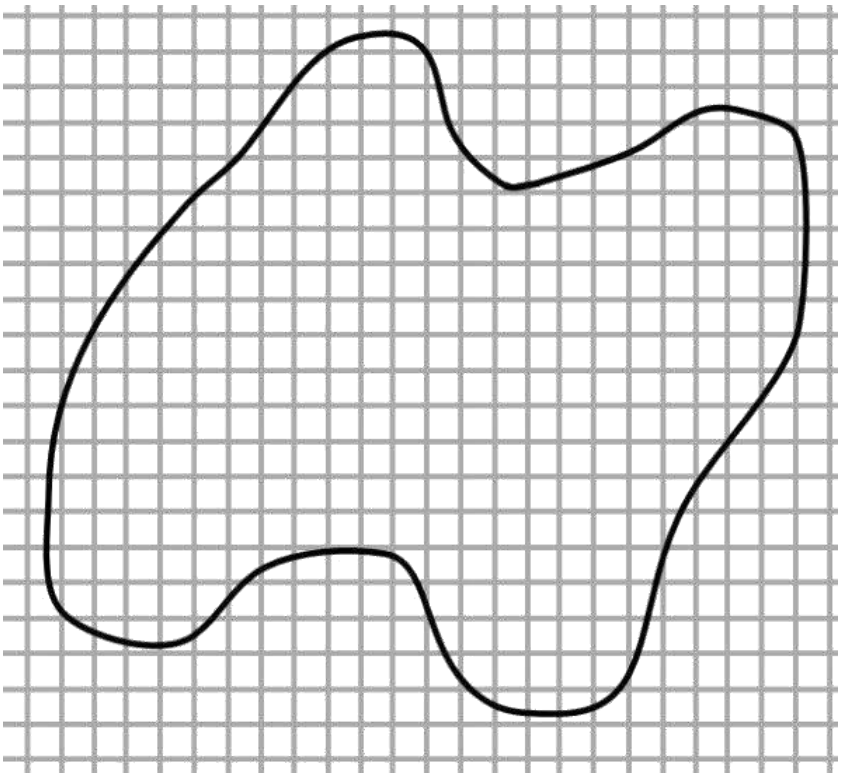

Common Solids

Introduction to Common Solids

Introduction to Common Solids.

- A solid is an object which occupies space and has a definite or fixed shape. Solids are either regular or irregular.

Definition of Terms.

Faces:

- A face is a flat surface of a three-dimensional object.
- It is a polygon that forms one of the sides of the solid shape.

Vertices (Vertex - singular):

- A vertex is a point where edges meet in a three-dimensional object.
- It is the intersection point of three or more edges.
- The plural form is vertices.

Edges:

- An edge is a line segment where two faces of a solid shape meet.
- It is the connection between vertices.

All solids have surfaces. Some have faces, edges and vertices. Such solids are called ***polyhedra (singular polyhedron)***.

<u>Types of Solids.</u>

(1). Cube

- A cube is a three-dimensional geometric shape that has six square faces, twelve straight edges, and eight vertices.

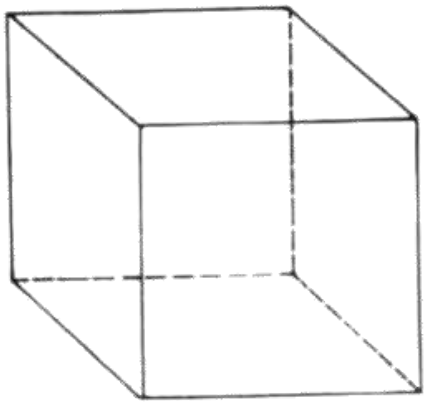

(2). Cuboid.

- A cuboid is a three-dimensional geometric shape with six rectangular faces, twelve straight edges, and eight

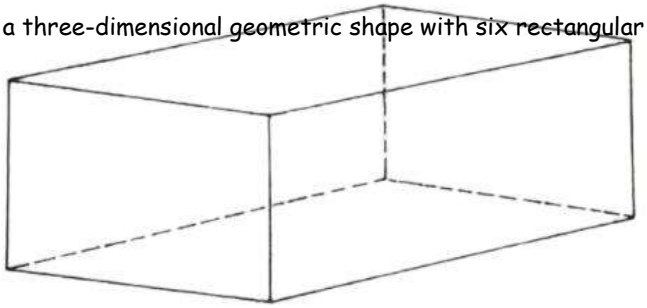

vertices.

(3). Cylinder.

- A cylinder is a three-dimensional geometric shape characterized by two parallel circular bases of equal size,

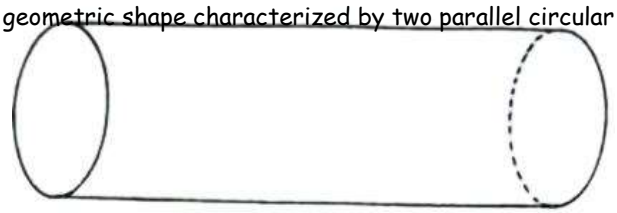

connected by a curved surface.

(4). Cone.

- A cone is a three-dimensional geometric shape that has a circular base and a single vertex (apex) located

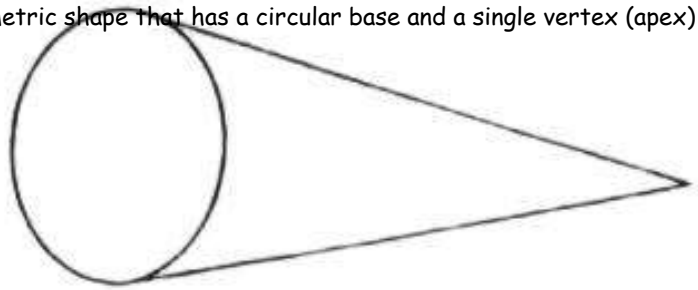

above the center of the base.

(5). Sphere.

- A sphere is a three-dimensional geometric shape that is perfectly round and symmetrical. It is defined as the set of all points in space that are equidistant from a common center.

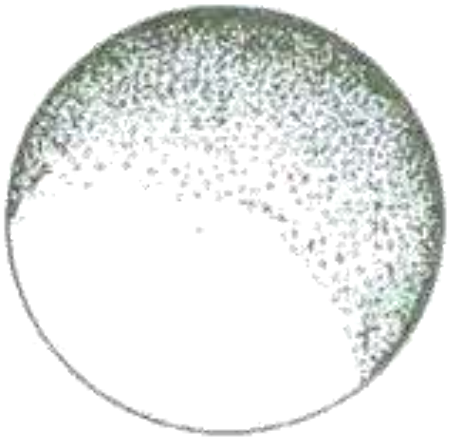

(6). Tetrahedron.

- A tetrahedron is a three-dimensional geometric shape with four triangular faces, four vertices, and six edges. Each triangular face of a tetrahedron is adjacent to every other face, and the faces are equilateral triangles.

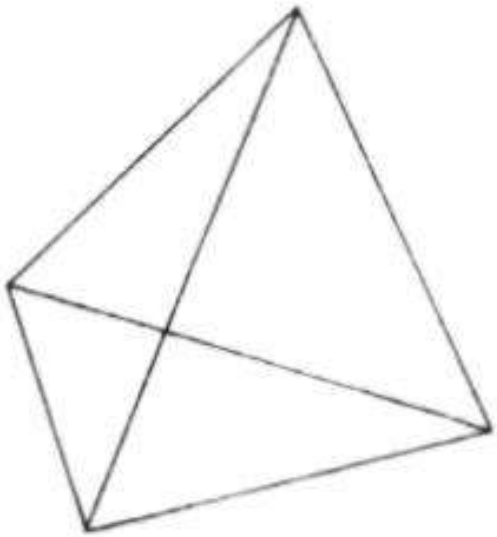

Example.

(1). The figure below shows a cuboid ABCDEFGH. How many faces, edges and vertices does it has.

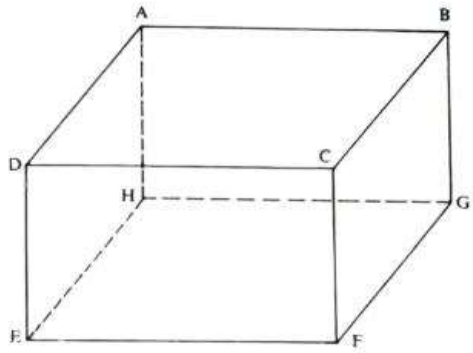

Solution

Faces = 6

Edges = 12

Vertices = 8.

<u>Assignment</u>

How many faces, edges and vertices does:

(1). a cuboid has?

(2). a triangular prism has?

(3). a cone has?

(4). a Tetrahedron has?

(5). a sphere has?

(6). Name some common solid that have no vertices.

(7). Name a common solid that has neither a vertex nor an edge. How many faces does that solid have?

- *Polyhedra are named according to the number of faces they have. State the number of faces in the figure below.*

(8).

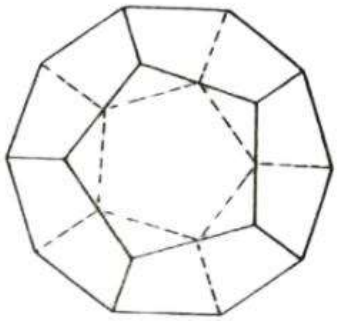

(9).

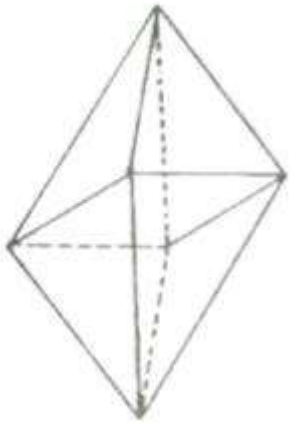

(10).

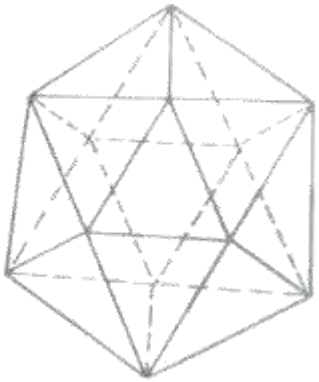

Sketching of Solids

Sketching of Solids.

- To draw a reasonable sketch of a solid on a plain paper, the following ideas are helpful:

(1). Use of Isometric Projection.

- In this method, the following points should be observed:

22. Each edge should be drawn to the correct length.

23. All rectangular faces must be drawn as parallelograms.

24. Horizontal and vertical edges must be drawn accurately to scale.

25. The base edges are drawn at an angle of 30° with the horizontal lines.

26. Parallel lines are drawn parallel.

Example.

(1). An isometric projection of a cuboid 5 cm long, 4 cm wide and 3 cm high is shown in figure below.

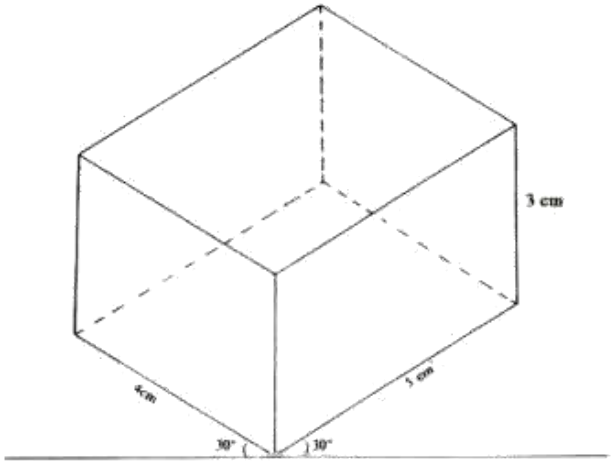

(2). The use of Perspective Projection

- In this method, solids are drawn bearing the following points in mind:

5. Parallel lines are not drawn parallel. Horizontal parallel lines appear to meet at a vanishing point.
6. Vertical lines are drawn vertical.

(iii) For a front view of a solid, the measurements of the visible face are accurately drawn to scale.

Example

A perspective projection of a cuboid 5 cm and 4 cm by 3 cm is shown in figure below.

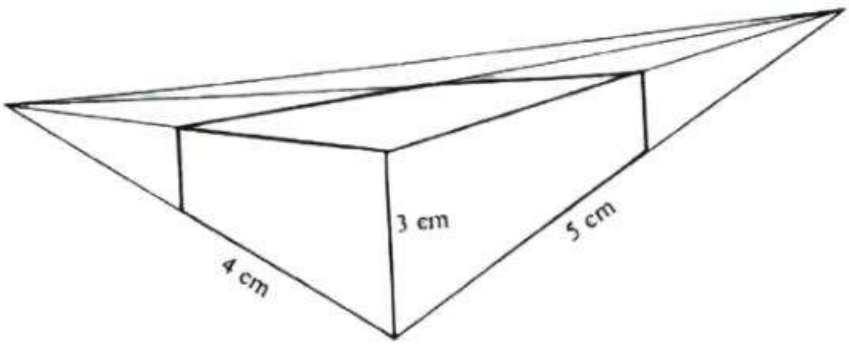

(3). Oblique Projection

12. Draw the horizontal line AB = 5 cm.
13. Draw the vertical line AF = 4 cm.
14. Draw AD and BC reduced to about of their true lengths, so that they make angles of 45° with AB.
15. Draw the vertical lines BG, CH and DE accurately.

16. Join EF, FG, GH and HE.

Example

An oblique drawing of a cuboid ABCDEFGH is obtained as in figure below in which AB = 5 cm, BC = 3 cm and BG =

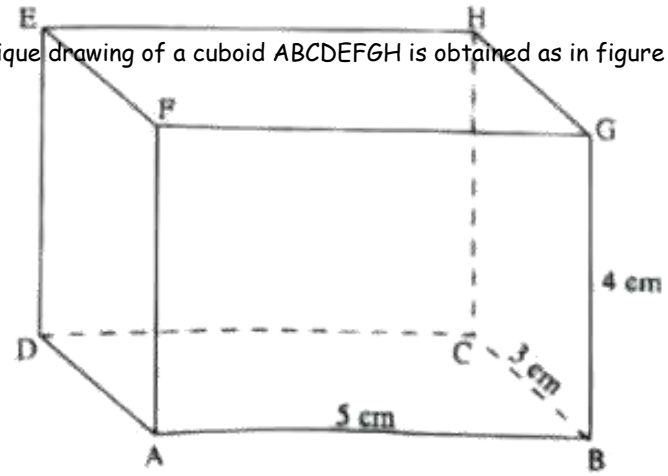

4 cm.

Assignment

(1). Draw an isometric projection of a pyramid 7 cm high on a square base of side 4 cm.

(2). A water tank is in the shape of a cuboid 3 m long, 2 m long wide and 3 m high. Draw:

(3). An isometric projection of the tank using a scale of 2 cm for 1 m.

(4). An oblique projection of the tank.

(5). A perspective drawing of the tank.

(6). Draw an oblique projection of a cube of edge 4 cm.

(7). Make a perspective drawing of a rail tunnel.

(8). Make a perspective drawing of a classroom door half open, as viewed from outside.

(9). Draw an oblique view of a long line of coffee trees, showing the vanishing points clearly.

(10). A pyramid 8 cm high on a square base of side 3 cm. Draw its isometric projection.

Nets of Solids

Nets of Solids.

- A geometry net is a two-dimensional shape that can be folded to form a three-dimensional shape or a solid. When the surface of a three-dimensional figure is laid out flat showing each face of the figure, the pattern obtained is the net.
- Infinite patterns like nets of models are called tessellations.

- A regular tessellation is a pattern of congruent regular polygons, all of one kind, filling a whole space, e.g., a squared paper. Tessellations are therefore widely used in the construction of models of solids.

Example.

(1). The figure below shows a sketch of a cardboard model of a right pyramid on a square base. Draw the net of the shape formed.

Solution

If the pyramid is cut along the edges VA, VB, VC and VD, the faces can be laid out

flat. The flat shape forms the net of the pyramid. This is as shown below.

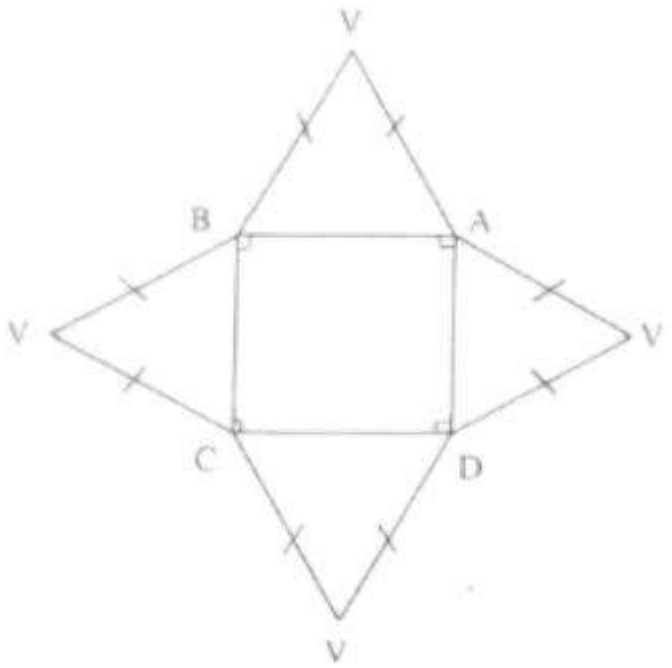

<u>Assignment</u>

(1). The net of a solid is as shown below. Sketch the solid if ABCD is the base.

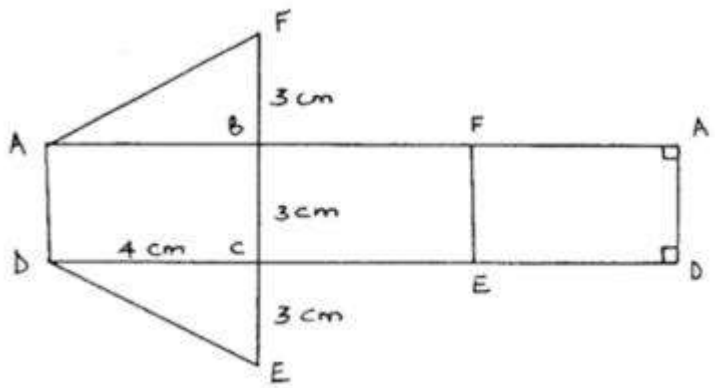

(2). On The Surface of a Cuboid ABCDEFGH A Continuous Path BFDHB Is Drawn as Shown by The Arrows Below.

Draw and label a net of cuboid showing the path.

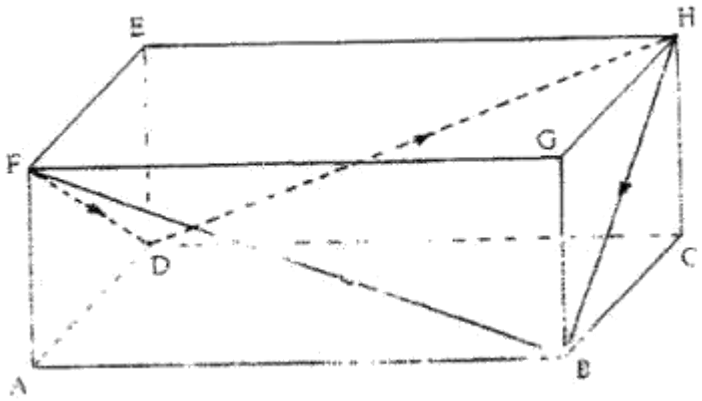

(3). The figure below is a triangular prism of uniform cross – section in which AF = 4 cm, AB = 5 cm and BC = 8 cm. Draw and clearly labelled net of the prisms.

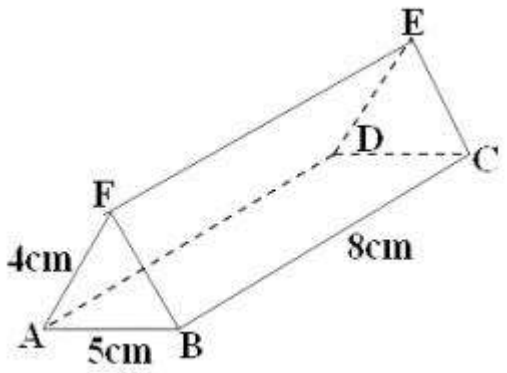

(4). The figure below shows a net of a solid (measurements are in centimeters). Complete the solid showing the hidden parts.

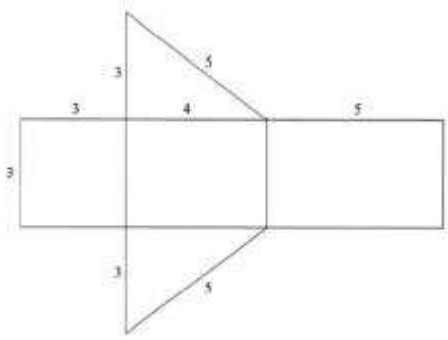

(5). The figure below represents below represents a prism of length 7 cm AB = AE = CD = 2 cm and BC – ED = 1 cm. Draw the net of the prism.

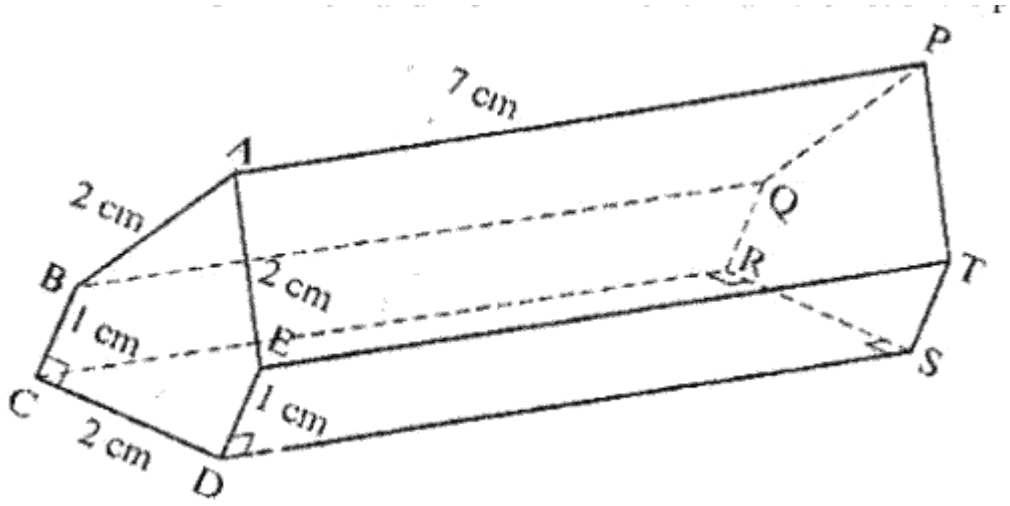

(6). The figure below represents a triangular prism ABCDEF. X is a point on BC. Draw a net of the prism.

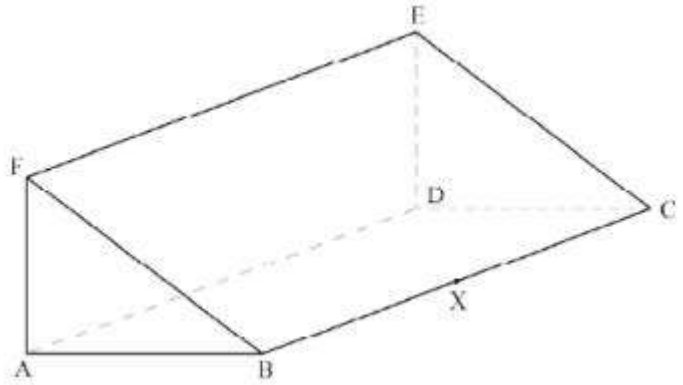

(7). The figure below shows a solid made by passing two equals regular tetrahedra. Draw a net solid.

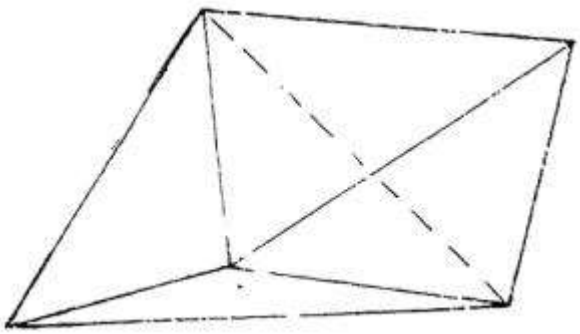

(8). The figure below represents a square based solid with a path marked on it. Sketch and label the net of the solid

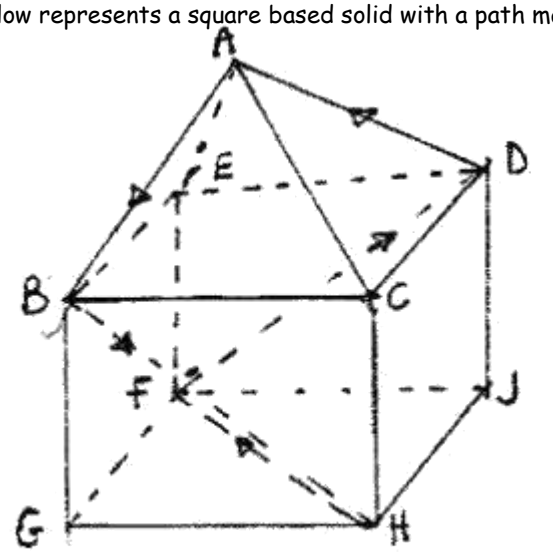

Draw the solids of each of each of the nets below:

(9).

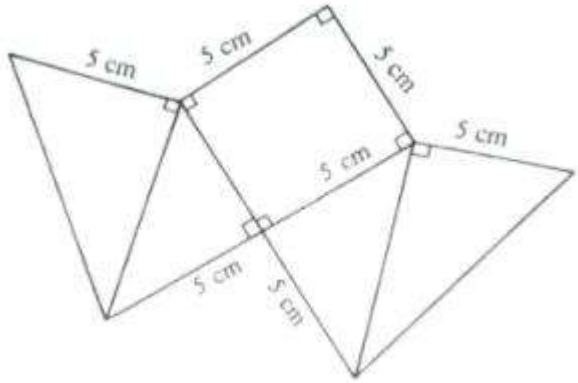

(10).

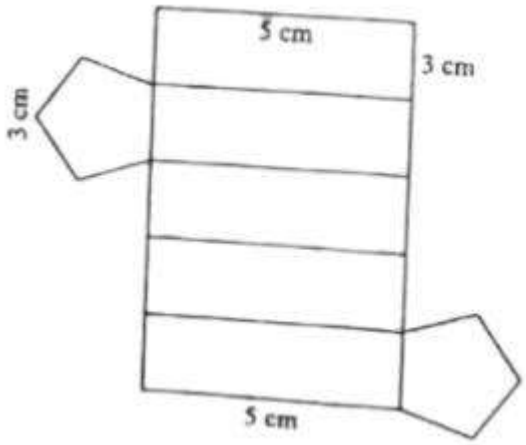

Models of Common Solids

Models of Common Solids

(a). Cardboard models

- It involves use of manilla papers.

Procedure.

(1). Draw accurately the net of a pyramid on whose base is a square of side 10 cm and slant edges are each 15 cm.

(2). Cut out the net, fold it to form a pyramid. Secure the edges using a cellotape.

The net of a pyramid can be cut out as shown. with tabs. Construct the net.

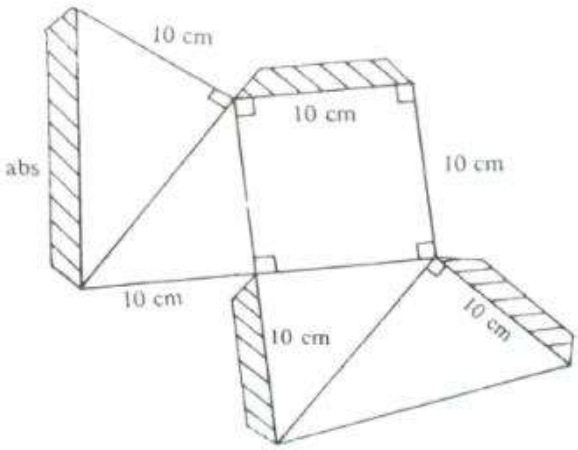

(b). Skeleton models

- To make skeleton models, the following can be used:

17. Wire of suitable thickness.
18. Plastic straws with an appropriate wire or string.
19. Pair of pliers for cutting and bending the wires.

- These models are advantageous over cardboard models because it is easier to see all the angles and edges. • A model of a tetrahedron as shown below can be made using six equals plastic straws, each 15 cm long and

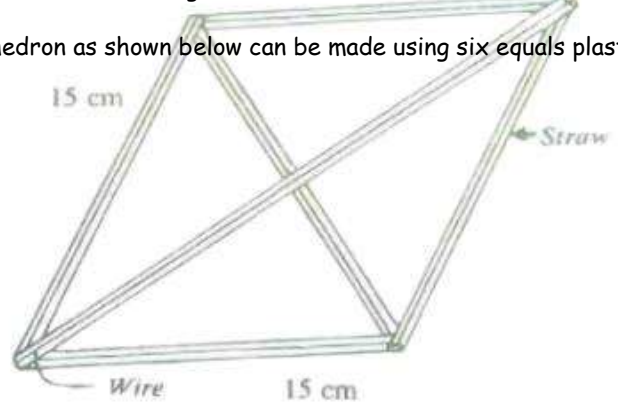

a wire.

Example.

Make a skeleton model of a reasonable pyramid with a square base using a straw of 15cm length.

Solution

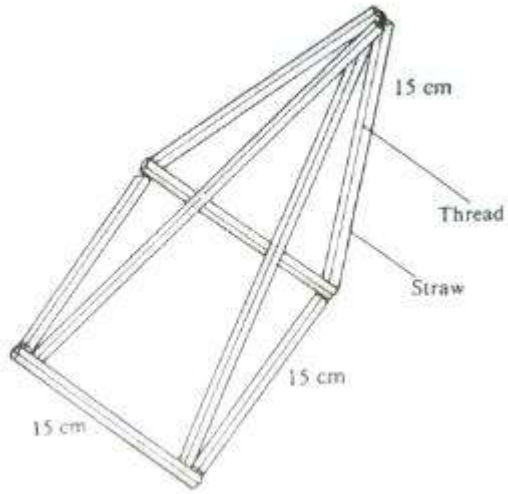

<u>Assignment</u>

(1). Make a model of a cube of side 10 cm.

Make a model of the following solids:

(2). Tetrahedron.

(3). Cylinder.

(4). Octahedron.

(5). Triangular prism.

(6). Draw a regular pentagon of side 5 cm. From each side, draw other regular pentagons so that you have six pentagons in total. Similarly obtain another set of six pentagons. Join any side of one set to the other. The net so formed is of a regular dodecahedron. Join all the sides to obtain the model of the solid.

(7). Make a skeleton model of a reasonable of an octahedron

(8). Make a skeleton model of a reasonable of a wedge

(9). Draw accurately the model of a pyramid on whose base is a square of side 5 cm and slant edges are each 15 cm.

(10). Draw a model of tetrahedron of sides 10 cm.

Surface Area of Common Solids From Nets

Surface Area of Solids from Nets.

- The surface area of a solid may be calculated by finding the area of its net.
- Find the area of all the faces of the solid.
- Add up the areas of all the faces to get the total surface area of the solid.

Example.

(1). The figure below shows a right pyramid whose base is a square of side 10 cm and its slant side 15 cm long. Calculate its surface area.

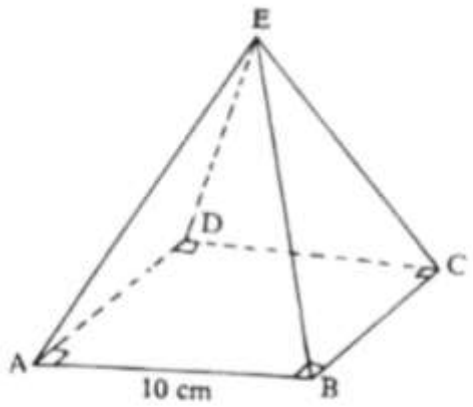

Solution

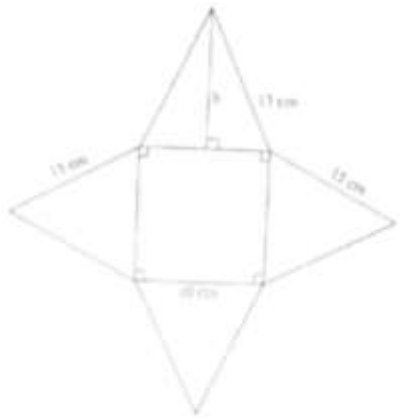

The net of the pyramid is shown in figure below.

Area of square = 10 x 10

= 100 cm²

Height of each triangle = √ (15² -5²)

= 14.1 (to l d p.)

Area of each triangle = ¹/₂ x 10 x 14.1

= 70.5 cm²

Thus, Surface area of the pyramid = 100 + 70.5 x 4

$= 382\ cm^2$

Assignment

(1). The figure below shows a solid made by passing two equal regular tetrahedral. Draw a net of the solid and hence find the surface area of the solid, if each face is an equilateral triangle of side 5cm.

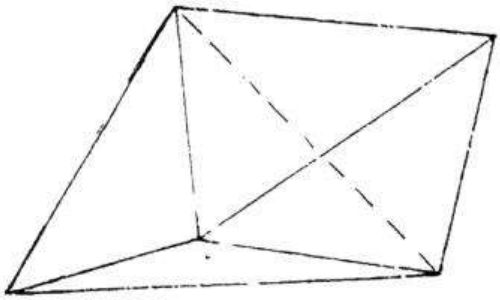

For each of the following solids, draw the net and hence use the net to calculate the surface area of the solid.

(2). A cube of side 8 cm.

(3). A cuboid measuring 12 cm by 6 cm by 8 cm.

(4). A tetrahedron whose faces are equilateral triangles of side 10 cm.

(5). A cylinder whose radius and height are 7 cm and 20 cm respectively.

(6). A polyhedron made up of a pyramid with isosceles triangles and a cuboid as shown in figure below.

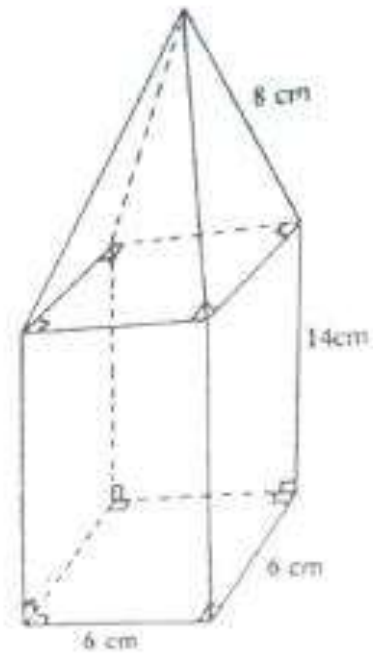

(7). A triangular prism. as shown in figure below.

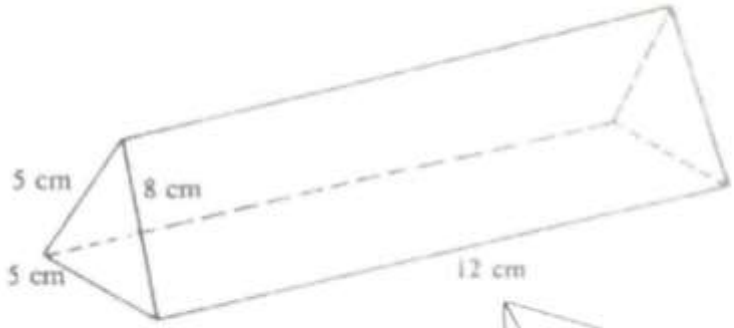

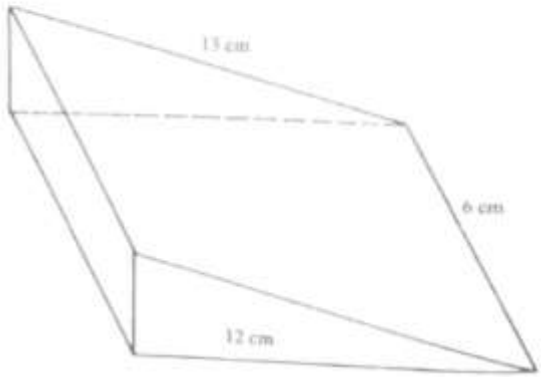

(8). The wedge shown in figure below.

(9). A cone of radius 7 cm and height 10 cm.

(10). The figure below represents a prism of length 7 cm AB = AE = CD = 2 cm and BC = ED = 1 cm. Draw the net

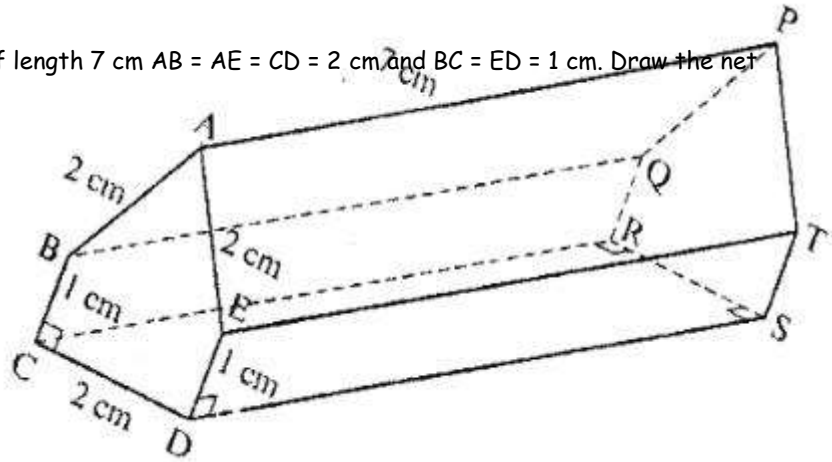

of the prism hence find its Surface Area.

Distance Between Two Points on the Surface of a Solid

Distance between Two Points on the Surface of a Solid.

- To find the distance between two points on the surface of a solid, first open up the solid into its net.

Example.

Find the distance between B and X through G and F in figure below, if BA = 5 cm, AD = 3 cm and DE = 4 cm.

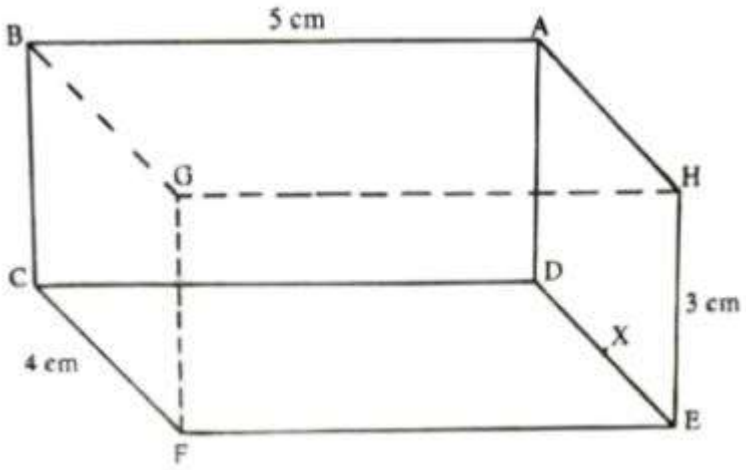

Solution

Open the cuboid into a net:

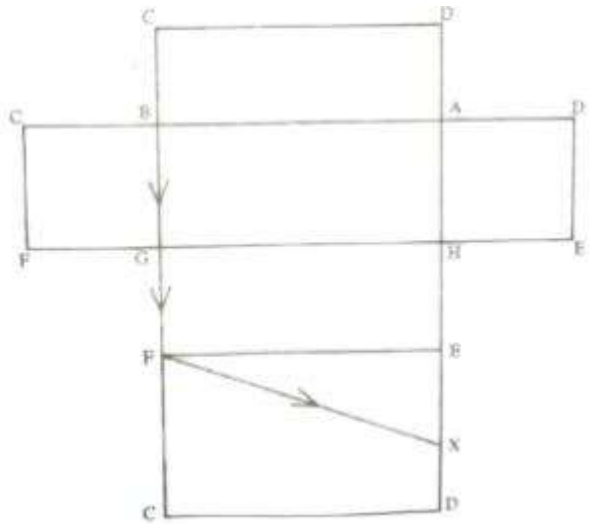

DA BG+GF+ FX

27. 4+3+√ (52+22)
28. 7+ √29
29. 7+5.385
30. 12.385

Thus, BX= 12.4 cm (to 1 d.p.)

<u>Assignment</u>

(1). The figure below shows a triangular prism ABCDEF. Its cross section is an equilateral triangle of side 10 cm and its length is 20 cm. A string runs from F to Q through R and D. Along what edges should the cube be opened so that

F, Q, R, and S lie on a straight line? What is the length of the straight

line?

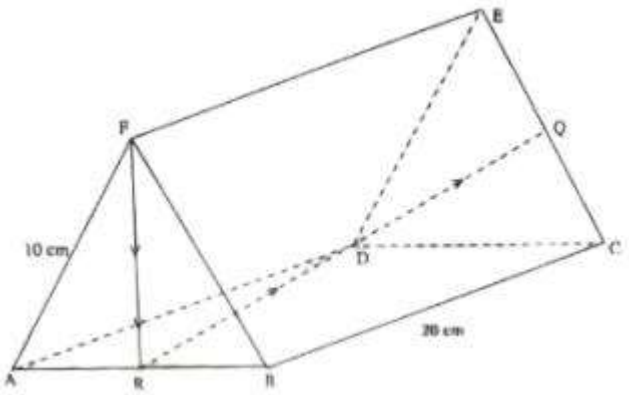

(2). The diagram below represents a right pyramid on a square base of side 3 cm. The slant of the pyramid is 4 cm. Draw a net of the pyramid and on the net drawn, measure the height of a triangular face from the top of the Pyramid.

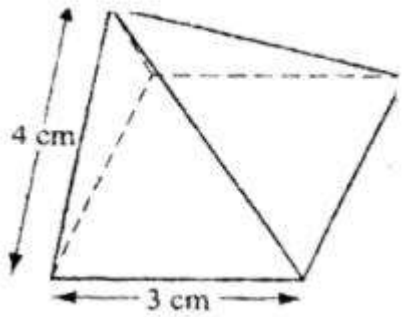

(3). The figure shows a cube of side 8 cm. The points Q, R and S are midpoints of EH, HC and BC respectively. A string runs from F to Q on face EFGH, Q to R on face CDEH, R to S on face BCHG and S to A on face ABCD. Along what edges should the cube be opened so that the points F, Q, R, S and A lie on a straight line? What is the length of the line?

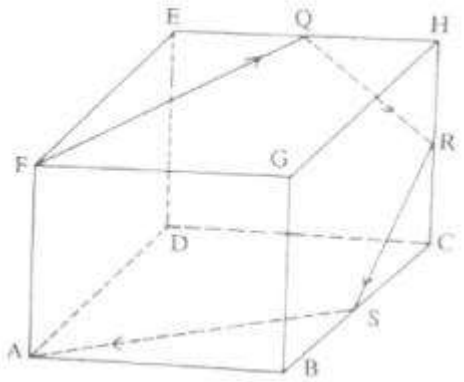

(4). The figure below shows a pyramid on a square base PQRS. Given that PV = QV = RV = SV = 5 cm, draw accurately the net of the pyramid. Use the net to calculate the distance PQ = QR = RS = SP of the pyramid.

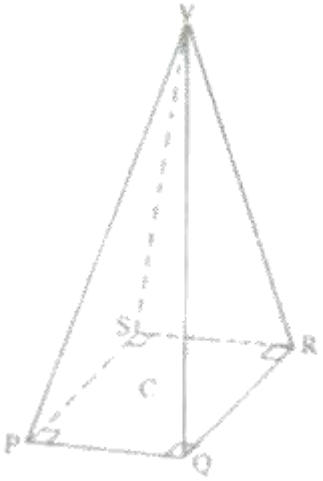

(5). The diagram below represents a right pyramid on a square base of side 3cm. The slant edge of the pyramid is 4cm. Draw a labelled net of the pyramid and on the net drawn, measure the height of a triangular face from the top of the pyramid.

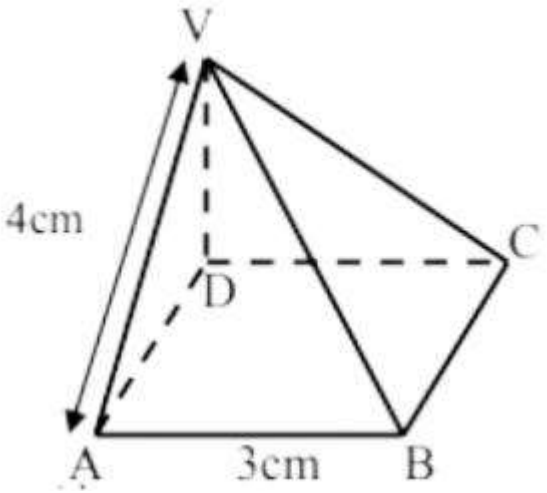

(6). A model of a tent consists of a cube and a pyramid on a square base, see the figure below. Draw accurately the net of the model. Use the net to calculate the total height of the model.

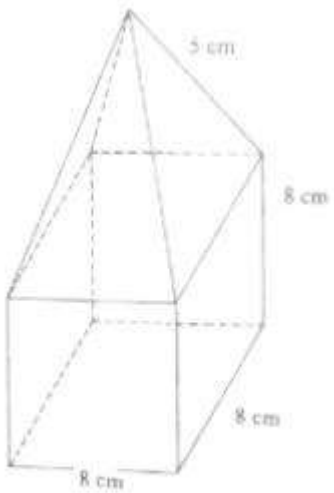

Volume of Prisms

- Volume is the amount of space occupied by an object. It's measured in cubic units.
- Generally volume of objects is base area x height

Volume of a Prism

- A prism is a solid with uniform cross section.
- The volume V of a prism with cross section area A and length l is given by V = AL

Example;

- A rectangular box has a length of 5cm, a width of 3cm, and a height of 2cm. Find its volume.

Solution:

- Find the area of the base: Base area = length × width = 5cm × 3cm = 15 sq cm
- Calculate the volume: V = B × h = 15 sq cm × 2 cm = 30 cubic cm (cm^3, read as cubic centimeters)

QUESTIONS

(1). A triangular prism has a base area of 24 sq cm and a height of 8cm. Find its volume.

(2). A regular hexagonal prism has a side length of 4cm and a height of 10cm. The base area of a regular hexagon can be calculated using a specific formula, but for this example, we can assume the base area (B) is provided as 24 sq cm.

(3).

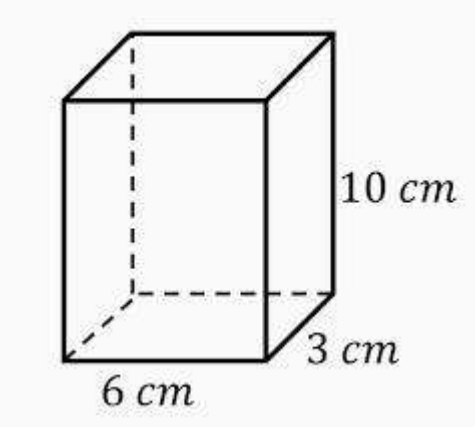

(4).

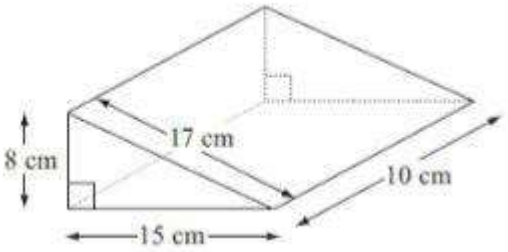

Volume of a Pyramid

Volume of a Pyramid

- Volume of a pyramid = $^1/_3$ Ah
- Where A = area of the base and h = vertical height

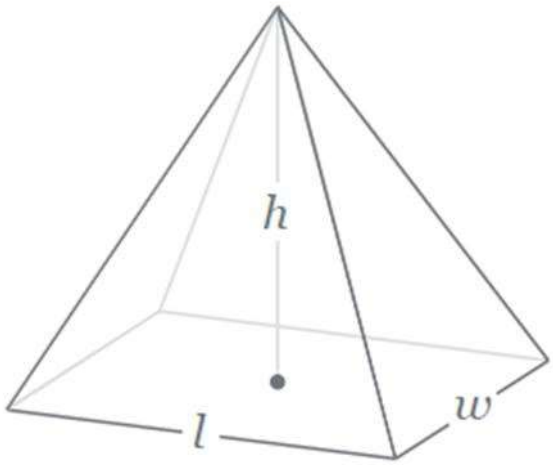

- A square-based pyramid has a base side length of 6cm and a height of 8cm. Find its volume.

Solution:

- Find the area of the base: Base area = side^2 = 6^2 cm^2 = 36 sq cm
- Calculate the volume: V = ($^1/_3$) × Base Area × Height = ($^1/_3$) × 36 sq cm × 8 cm = 96 cubic cm

QUESTIONS

(1). A triangular pyramid has a base with an area of 15 sq cm and a height of 10cm. Find its volume

(2). An irregular pyramid has a trapezoidal base with parallel bases of 4cm and 7cm and a height of 5cm. Find its volume.

(3). The figure below is a square based pyramid, ABCDV, such that AB= 7 cm,and VA=VB= VC = VD= 9cm.

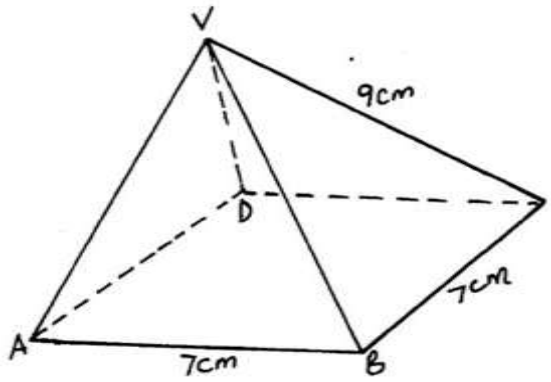

a. Find the height of the vertex V above the centre of the base.

(3). Find the volume of;

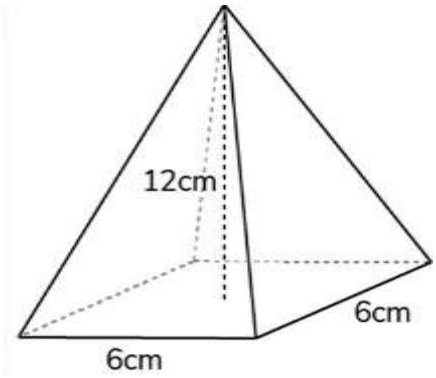

Volume of a Cone

<u>Volume of a Cone</u>

- Volume = $^1/_3$ area of base × height

  = $^1/_3\ \pi r^2 h$

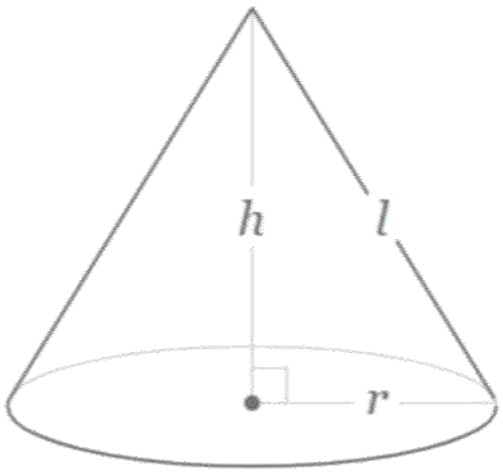

EXAMPLES

- An ice cream cone has a base diameter of 5cm and a height of 8cm. Find its volume (excluding the space occupied by the ice cream).

Solution:

- Find the radius: Radius (r) = diameter (d) / 2 = 5cm / 2 = 2.5cm
- Calculate the volume: $V = (1/3)\pi r^2 h = (^1/_3)\pi \times 2.5^2\ cm^2 \times 8\ cm \approx 33.51$ cubic cm (rounded to two decimal places)

QUESTIONS

(1). A party hat is shaped like a cone with a base radius of 3cm and a height of 12cm. Find the volume of the hat.

(2). A cone has a base radius of 4cm and a volume of 47.12 cubic cm. If the base area is 50.24 sq cm (which can be calculated using πr^2), find the height.

(3). Calculate the volume of a cone whose height is 12cm and length of the slant height is 13cm

Volume of a Frustum of a Cone

Volume of a Frustum of a cone

- Volume = volume of large cone – volume of smaller cone

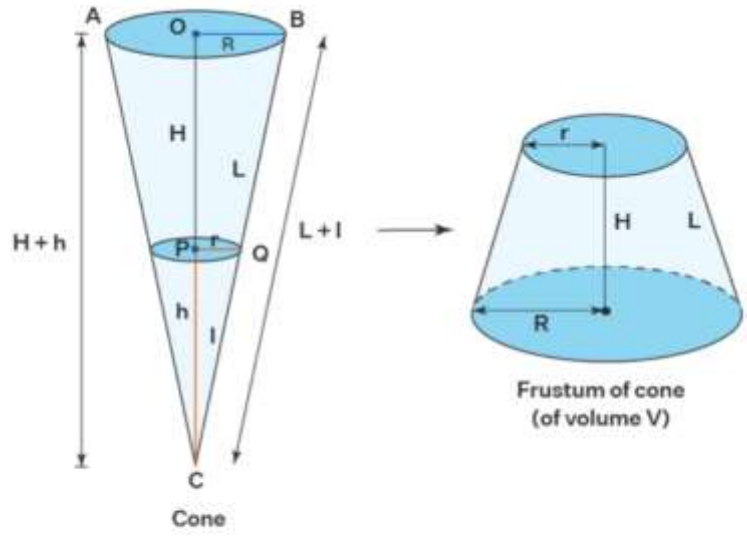

Fig. 7.35

Now, Volume = $^1/_3\pi\,[R^2 + Rr + r^2]h$ cu.units

27. $^1/_3 \times {}^{22}/_7 \times [28^2 + (28 \times 7^2) \times 45$

28. $^1/_3 \times {}^{22}/_7 \times 1029 \times 45 = 4810$

QUESTIONS

(1). A watering can has the shape of a frustum with a base diameter of 12cm (R = 6cm) and a top diameter of 8cm (r = 4cm). The slant height is 10cm. Find the volume of the can.

(2). A traffic cone has the shape of a frustum with a base diameter of 50cm (R = 25cm), a top diameter of 20cm (r = 10cm), and a height of 70 cm. Find the volume of the cone.

(3). A frustum of a cone has a base radius of 10cm, a top radius of 5cm, and a height of 12cm. The volume is 261.8 cubic cm. Find the larger base radius (R).

Volume of a frustum of a pyramid

Volume of a Frustum of a pyramid

- Volume = volume of large pyramid – volume of smaller pyramid

Volume of a pyramid = $^1/_3$ Ah

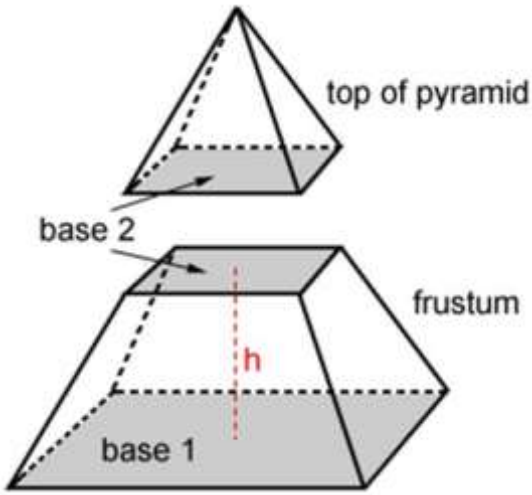

It is given that

- The height of the frustum = H =15cm
- The Radius of the larger base = R = 5cm
- The radius of the smaller base = r = 2.5cm
- The volume of the pyramid is V = $\frac{\pi H}{3}$ $(R^2 + Rr + r^2)$

V = $\frac{\pi \times 15}{3}$ $(5^2 + 5 \times 2.5 + 2.5^2)$

V = 687.22cm^3

QUESTIONS

(1). A square-based frustum has a base side length of 8 cm, a height of 10 cm, and the top is cut off such that the remaining top side length is 4 cm. Find the volume.

(2). A triangular-based frustum has a base with side lengths of 6 cm, 8 cm, and 10 cm. The height of the frustum is 12 cm. The top is cut off parallel to the base, removing the top 4 cm from each side length. Find the volume.

(3). The figure below represents a frustum of a right pyramid on a square base. The vertical height of the frustum is 3cm. Given that EF = FG = 6 cm and that AB = BC + 9cm

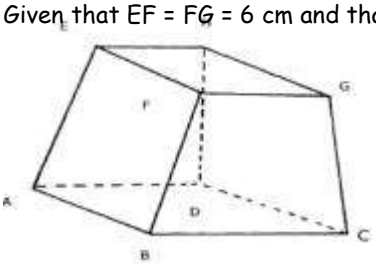

Volume of a Sphere

Volume of a Sphere

- $V = {}^{4}/_{3}\pi r^{3}$

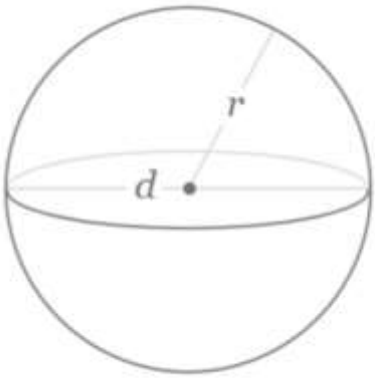

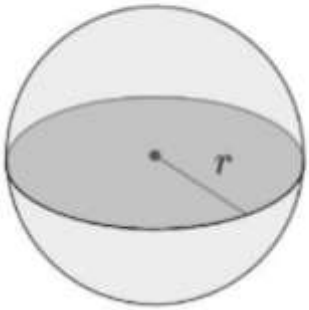

$$V = \frac{2}{3}\tau r^{3}$$

Example;

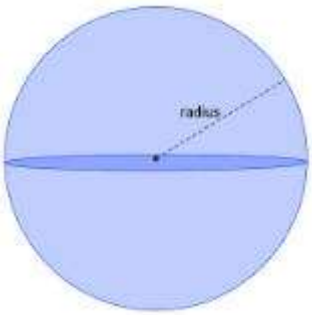

r = 7.7

Volume of a sphere = ${}^{4}/_{3}\ \pi r^{3}$ units^{3}

7. ${}^{4}/_{3}\ \pi 7.7^{3}$
8. 1912.32 units^{3}

Volume of Hemisphere =

$\frac{\frac{4}{3}\pi r^3}{2}$ units^3

$= \frac{\frac{4}{3}\pi 7.7^3}{2}$

= 956.16 units^3

QUESTIONS

(1). A basketball has a diameter of 24 cm. Find its volume.

(2). A bowl has the shape of a hemisphere with a radius of 8 cm. Find the volume of water it can hold.

(3). A spherical container which is 30 cm in diameter is $^3/_4$ full of water. The water is emptied into a cylindrical container of diameter 12 cm. What is the depth of the water in the cylindrical container?

Mass, Weight and Density

MASS

Mass as a Unit of Measurement

- The mass of an object is the quantity of matter in it. Mass is constant quantity, wherever the object is, and matter is anything that occupies space. The three states of matter are solid, liquid and gas.
- The SI unit of mass is the kilogram. Other common units are tonne, gram and milligram.

The following table shows units of mass and their equivalent in kilograms.

Unit	*Abbreviation*	*Equivalence in kg*
1 hectogram	Hg	0.1 kg
1 decagram	Dg	0.01 kg
1 gram	g	0.001 kg
1 decigram	dg	0.000i kg
1 centigram	cg	0.00001 kg
1 milligram	mg	0.000001 kg
1 microgram	µg	0.000000001 kg
1 megagram	Mg	1 000 kg
1 tonne (1 megagram)	t	1 000 kg

Exercise

(1). A car has a mass of 1500 kilograms. If a passenger with a mass of 70 kilograms gets into the car, what is the total mass of the car and the passenger?

(2). A bakery uses 4.5 kilograms of flour to make one batch of bread. If the bakery wants to make 12 batches of bread, how much flour in total will they need?

(3). A package contains three items with masses of 0.75 kg, 1.2 kg, and 0.5 kg. What is the total mass of the items in the package?

(4). A swimming pool is filled with water, which has a mass of 1000 kilograms per cubic meter. If the pool has dimensions of 10 meters by 5 meters by 2 meters, what is the total mass of the water in the pool?

(5). Sarah has a bag of apples that weighs 3.6 kilograms. If each apple weighs 0.2 kilograms, how many apples are in the bag?

(6). Mary bought 2 kg of meat. Half of the meat was cooked for supper and a quarter of the remainder used to make burgers for the following days breakfast. How much meat in grams was left?

(7). John requires 2 100 kg of sand to construct his house. How many lorries of sand will he buy if 1 lorry carries 7 tonnes of sand?

(8). Express each of the following masses in kilograms; 20 Hg,

(9). A textbook has 268 leaves. Each leaf has a mass of 50 g and the cover 20g find the mass of the book in kilograms.

(10). Express each of the following in grams: 4538 μg

WEIGHT

Weight as a Unit of Measurement - Video Lesson and Notes PDF

Density

Density as a Unit of Measurement

DENSITY

- The density of a substance is the mass of a unit cube of the substance. A body of mass (m) kg and volume (V) m^3 has

(i).

$$\text{Density (d)} = \frac{\text{mass (m)}}{\text{volume (v)}}$$

(ii) Mass (m) = density (d) x volume (v)

(iii)

$$\text{Volume (v)} = \frac{\text{mass}}{\text{density}}$$

Units of Density

- The SI unit of density is kg/m^3. The other common unit is g/cm^3 •

1 g/cm^3 = 1000 kg/m^3

Example;

Find the mass of an ice cube of side 6 cm, if the density of ice is 0.92 g/cm^3

Solution:

Volume of cube = 6 x 6 x 6 = 216 cm^3

Mass density x volume

29. 216 × 0.92

30. 198.72g

EXCERCISE

(1). What is the mass of water that can fill a cylindrical tank whose diameter and height are 2.8 m and 3 m respectively? (Take density of water as 1 kg/l)

(2). A cylindrical milk churn contains 15 litres of milk. Find the density of milk in g/cm^3 if the total mass of milk in the churn is 14 kg.

(3). The reading of liquid in a measuring cylinder is 45 cm^3. A solid of mass 150 g is put into the container. If the density of the solid i 8.6 g/cm^3, find the new reading.

(4). A right-angled triangular prism has length 3 m, breadth 2 m and height 2.5 m. If the mass of the prism is 3.4 kg, find its density.

(5). The density of a certain type of wood is 0.48 g/cm^3. Find the mass of a log of this wood with diameter 49 cm and length 3 m.

(6). A wooden block measuring 20 cm by 30 cm cm by 50 cm has a mass of 22.5 kg. Find the density of this wood in g/cm^3.

(7). Find the density in kg/m^3 of petrol if the mass of 1.5 litres of petrol is 1.2 kg.

(8). Calculate the mass in grams of 205 cm^3 of steel if it has a density of 97 800 kg/m^3.

(9). The density of gold is 19.3 g/cm^3, Calculate the volume, in m^3, of a golden ring mass of 57.9 g.

(10). 2 000 cm^3 of a mixture consists of 2.5 kg of substance A and 7.5 kg of substance B. Find the density of the mixture.

Volume and Capacity

What is Unit Conversion for Volume?

Unit Conversion for Volume

- Volume is the amount of space occupied by a solid object. The unit of volume is cubic units.

Conversion of Units of Volume

A cube of edge 1 cm has a volume of 1 cm x 1 cm x 1 cm = 1 cm^3 A cube

of side m has a volume of 1 m^3 But 1m = 100cm

Therefore 1m × 1m × 1m = 100cm × 100cm × 100cm

Thus; 1m^3 = 1000000cm^3

Example;

Convert 20 m^3 to cm^3

Sol

20m^3 = 20 × 1000000

= 20000000 cm^3

Exercise

(1). Conver 19.7 cm^3 in to m^3

(2). Convert 750 mm^3 into cm^3

(3). Convert 105 cm^3 into cm^3

(4). Convert 750 mm^3 into cm^3

(5). Convert 0.2 Hm^3 into cm^3

(6). Convert 0.01 km^3 into cm^3

(7). Convert 7.5 dm^3 into cm^3

(8). A rectangular tin measures 20 cm by 20 cm by 30 cm. What is its volume in m^3

(9). A school water tank has a radius of 2.1 m and a height of 450 cm. How many cm^3 of water does it carry when full?

(10). Cylindrical solid of radius 7 cm has a conical top of the same radius. The height of the cylindrical part of the solid is 17 cm. The conical top has a vertical height of 9 cm. Calculate the volume of the solid in m^3

Volume of a Cube

- A cube is a solid having six plane square faces in which the angle between two adjacent faces is a right-angle.

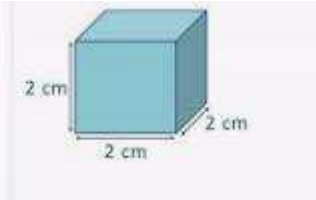

Volume of a cube = area of base x height

31. $l^2 \times l$

32. l^3

Example;

Find the volume of a cube of side 6cm

Sol

V=66×6

= 216cm^3

Exercise;

(1). A cubic tin measures 20 cm by 20 cm by 20 cm. What is its volume?

(2). Find the volume of water in a full cubic tank 4-m long, 4 m wide and 4 m deep?

(3). A school water tank has a square base of side of 450m and a height of 450 cm. Determine the maximum quantity of water it can carry

(4). A cubic container can hold 120 cm^3 of liquid. Find its length.

(5). 150 cm^3 of milk is poured into a cubic container of length 10 cm. Calculate the depth of the milk.

(6). A cubic room contains 1200 cm^3 of air. Find the length of the room.

(7). Find the volume of a cube of length 2.5 cm.

(8). Find in term of x the volume of a cube of side (x-4) cm.

(9). A school water tank is in the shape of a cube. Given that the volume of water in the tank when full is 369 cm^3 Calculate the surface area of the tank when closed, correct to 2 decimal places.

(10). The base of a cube are of length 80 cm and width 80 cm. Calculate the volume of the cube.

Volume of a Cuboid

- A cuboid is a solid wit six faces which are not necessarily square.

Volume of a cuboid = length x width x height

= A sq.units × h

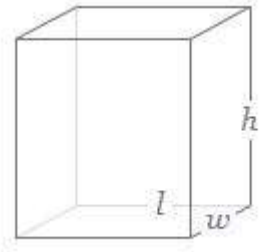

= Ah units cubic

Example;

Find the volume of a cuboid of sides 6cm by 8cm by 10cm

Sol

V=LWH

9. 6810

    a. 480cm ^{3}

<u>Exercise</u>

(1). A cuboid tin measures 20 cm by 25 cm by 30 cm. What is its volume?

(2). Find the volume of water in a full cuboid tank 4-m long, 8m wide and 7m deep?

(3). A school water tank has a square base of side of 450m and a height of 4050 cm. Determine the maximum quantity of water it can carry

(4). A cuboid container can hold 120cm ^{3} of liquid. Find its height given that it has a square base of length 10cm.

(5). 150cm ^{3} of milk is poured into a cuboid container of length 10cm and width 3cm. Calculate the depth of the milk.

(6). A cuboid room contains 1200cm ^{3} of air. Find the height of the room given that the room measures 30cm by 20cm.

(7). Find the volume of a cube of length 2.5cm .

(8). Find in term of x the volume of a cube of side (x-4) cm.

(9). A school water tank is in the shape of a cuboid. Given that the volume of water in the tank when full is 369m3 Calculate the surface area of the tank when closed , correct to 2 decimal places given that the tank has a square base of side 5m .

(10). A cuboid measures 80 cm by width 100 cm by 300cm. Calculate the volume of the cuboid.

Volume of a Cylinder

- A cylinder is a three-dimensional solid that holds two parallel bases joined by a curved surface, at a fixed distance. These bases are normally circular in shape (like a circle) and the center of the two bases are joined by a line segment, which is called the axis.

Volume of a cylinder = area of base x height

20. $\pi r^2 h$

21. $\pi r^2 h$ units

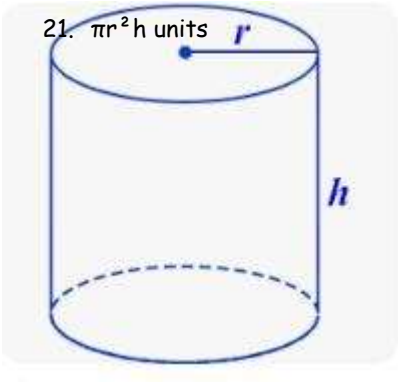

Example;

Find the volume of a cylinder of of radius 7cm and height 10cm.

Volume of a cylinder = $\pi r^2 h$

22. $^{2\,2}/_{7} \times 7 \times 7 \times 10$

23. 1540 cm^3

<u>EXCERISE</u>

(1). A cylindrical tin has a height of 20, a radius of 7 cm contains a liquid of volume 1540 cm^3. What is the height of the tin that is not in contact with the liquid ?

(2). Find the volume of water in a full cylindrical tank of radius 14 m long, and 17 m deep?

(3). A school water tank has a radius 50 m and a height of 4050 cm. Determine the maximum quantity of water it can carry

(4). A cylindrical container can hold 120 cm^3 of liquid. Find its height given that it has a square base of length 10cm.

(5). 150 cm^3 of milk is poured into a cuboid container of length 10 cm and width 3 cm. Calculate the depth of the milk.

(6). A cylindrical container contains 1200 cm^3 of air. Find the height of the room given that the room has a radius 20cm.

(7). Find the volume of a cylinder of radius 2.5 cm and height 2.5 m .

(8). Find in term of x the volume of a cylinder of diameter (x-4) cm and height 10 m.

(9). A school water tank is in the shape of a cylinder. Given that the volume of water in the tank when full is 369 m^3

Calculate the surface area of the tank when closed, correct to 2 decimal places given that the tank has a radius of 5 m.

(10). A cylinder has a radius of 80 cm and height of 30 m. Calculate the volume of the cylinder.

Volume of a Prism

Meaning of a prism

- A solid geometric figure whose two ends are similar, equal, and parallel **rectilinear** figures, and whose sides are **parallelograms**.

Volume of a prims = Cross sectional area × Length

Example;

Find the volume of the prism below.

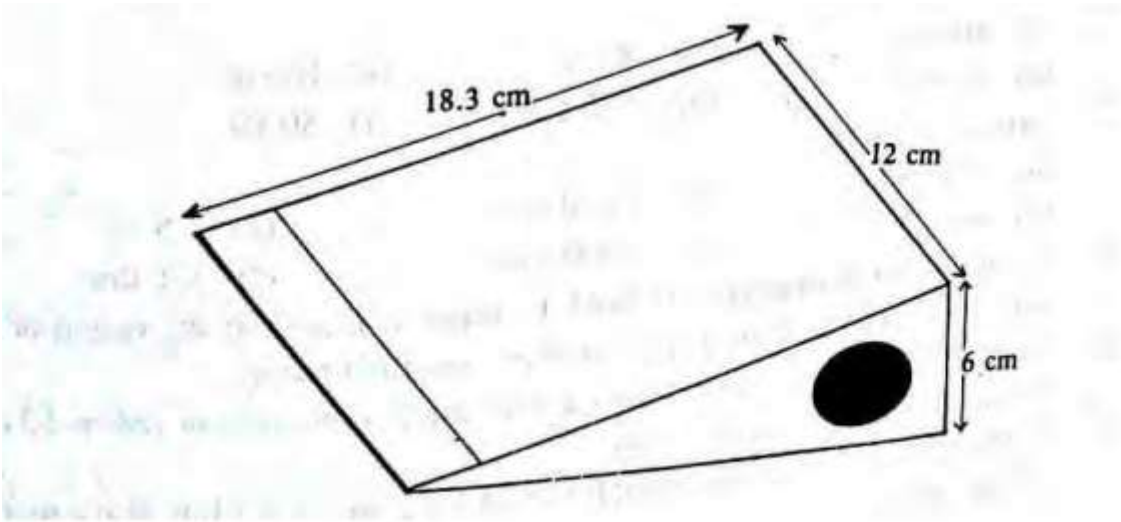

Cross sectional area $=\sqrt{s(s-a)(s-b)(s-c)}$ $s = \frac{1}{2}(18.3+18.3+6)$

31. $\frac{1}{2} \times 42.6$

32. 21.3

Cross sectional area= $\sqrt{s(s-a)(s-b)(s-c)}$

33. 21.3(21.3-18.321.3-18.321.3-6)

$$= \sqrt{21.3 \times 3 \times 3 \times 15.3}$$

$$= \sqrt{2933.01}$$

a. 54.16 cm^2

Volume of the prism = Cross sectional area × length

34. **54.16 × 12**

35. **649.92cm^3**

EXERCISE

(1). Find the volume of the prism below

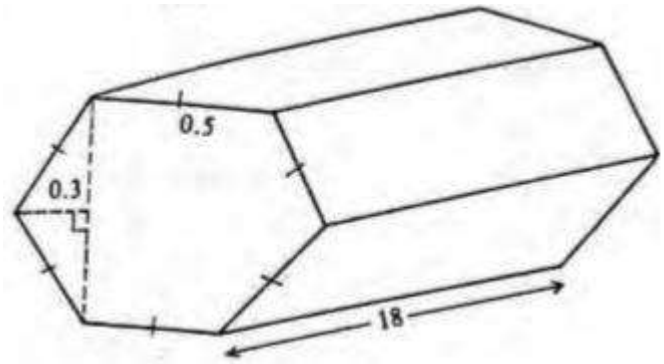

(2). Determine the volume of the prism below

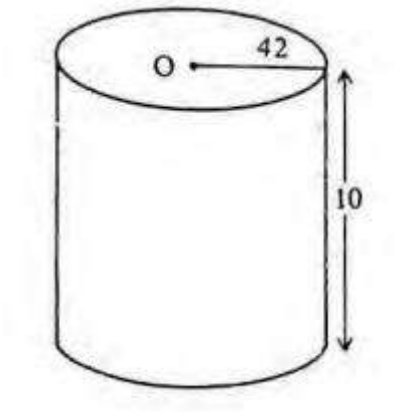

(3). A rectangular tin measures 20 cm by 20 cm by 30 cm. What is its volume in cubic meters?

(4). How many cubic centimetre of water are there in a full rectangular tank 4m long, 4 m wide and 2 m deep?

(5). Figure 13.23 shows cross-section of a ruler which is a rectangle of 2.5 cm by 0.2 cm on which is surmounted an isosceles trapezium (one in which the non-parallel sides area of equal length). The shorter of the parallel sides of the trapezium is 0.7 cm long. If the greatest height of the ruler is 0.4 cm and it is 33 cm long, calculate its volume.

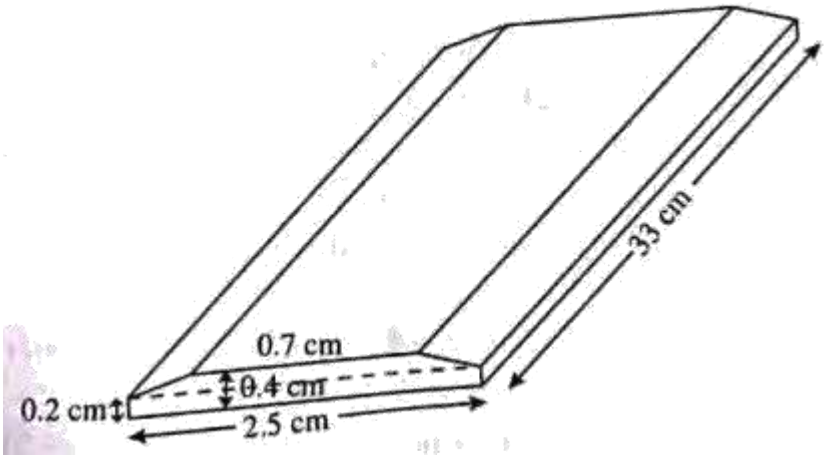

(6). A rectangular slab of glass measures 8 cm by 2 cm by 14 cm. Calculate its volume.

(7). Find the volume of the prism below. The measurements are in metres.

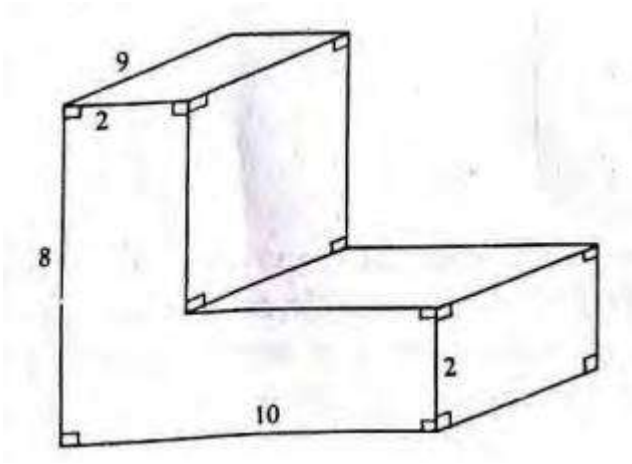

(8). Determine the volume of the prism below. The measurements are in milimetres.

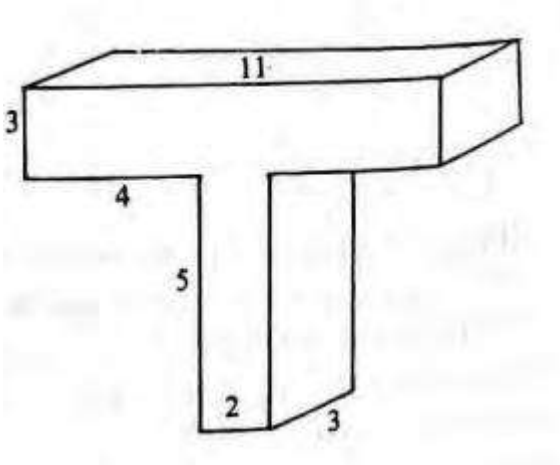

(9). Find the volume of the prism below given that the measurements are in metres.

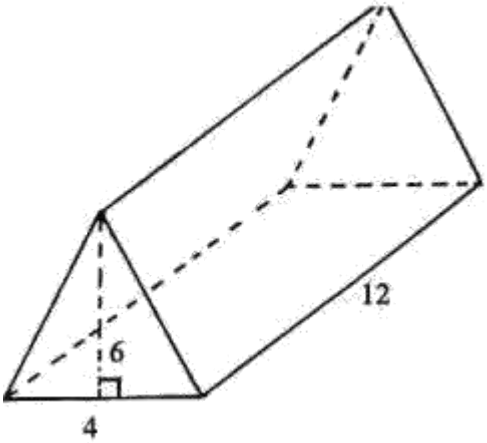

(10). What the volume of the prism below given that the measurement are in cubic centimetres.

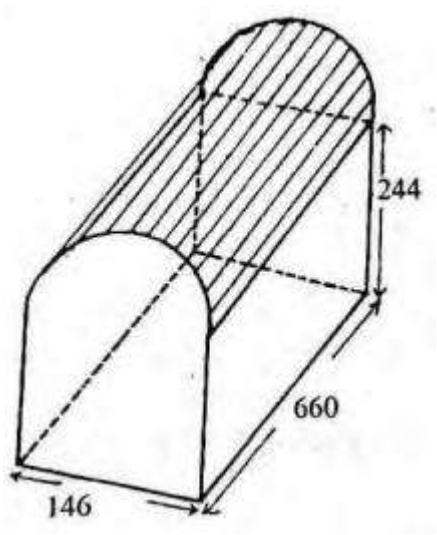

Units Conversion of Capacity

Meaning of capacity

- Volume indicates the total amount of space covered by an object in three-dimensional space. Capacity refers to the ability of something (like a solid substance, gas or liquid) to hold, absorb or receive by an object. Both solid and hollow objects have volume. Only hollow objects have the capacity.
- Units used for capacity include: Litres, milliliteres etc.

Capacity

- Capacity is the ability of a container to hold fluids. The SI unit of capacity is the litre (1).

Conversion of Units of Capacity;

- 1 centilitre (c/) = 10 millilitres (ml)
- 1 decilitre (d/) = 10 centilitres (c/)
- 1 litre (1) = 10 decilitres (d/)
- 1 Decalitre (D/) = 10 litres (7)
- 1 hectolitre (HI) = 10 Decalitres (DI)
- 1 kilolitre (kl) = 10 Hectolitres (HI)
- 1 kilolitre (kl) = 1000 litres (1)
- 1 litre (1) = 1000 millilitres (ml)

Relationship between Volume and Capacity

- A cube of edge 10 cm holds 1 litre of liquid. 1 litre = 10 cm x 10 cm x 10 cm = 1000 cm^3 1 m^2 = 10 cm^3 1 m^2 = 10 litres

EXERCISE

Express in litres:

(1). 400 ml

(2). 536 ml

(3). 375 Hl

(4). 100 dl

(5). A cylindrical container can hold 12 litres of liquid. If the height of the container is 0.4 m, find its radius to one decimal place.

(6). One litre of milk is poured into a cylindrical container of radius 10 cm. Calculate the depth of the milk

(7). A rectangular tin measures 20 cm by 20 cm by 30 cm. What is its capacity in litres?

(8). How many kilolitres of water are there in a full rectangular tank 4-m long, 4 m wide and 2 m deep?

(9). A school water tank has a radius of 2.1 m and a height of 450 cm. How many litres of water does it carry when full?

(10). A school uses 5, 000 litres of water a day, approximately how many days will a full cubic tank of side 5 m last?

Applications of volume and capacity

EXCERCISE

(1). A cylindrical container can hold 12 litres of liquid. If the height of the container is 0.4 m, find its radius to one decimal place.

(2). The British government hired two planes to airlift football fans to South Africa for the World cup tournament. Each plane took 10 $\frac{1}{2}$ hours to reach the destination. Boeng 747 has carrying capacity of 300 people and consumes fuel at 120 litres per minute. It makes 5 trips at full capacity. Boeng 740 has carrying capacity of 140 people and consumes fuel at 200 litres per minute. It makes 8 trips at full capacity. If the government sponsored the fans one way at the cost of 800 dollars per fan, calculate the total cost of fuel used if one litre costs 0.3 dollars.

(3). One litre of milk is poured into a cylindrical container of radius 10 cm. Calculate the depth of the milk

(4). A village water tank is in the form of a frustrum of a cone of height 3.2 m. The top and bottom radii are 18 m and 24 m respectively (a) Calculate The capacity of the water tank

(5). 15 families each having 15 members use the water tank in question 4 above and each person uses 65 litres of water daily. How long will it take for the full tank to be emptied

(6). A rectangular water tank measures 2.6 m by 4.8 m at the base and has water to a height of 3.2 m. Find the volume of water in litres that is in the tank

(7). A rectangular tin measures 20 cm by 20 cm by 30 cm. What is its capacity in litres?

(8). How many kilolitres of water are there in a full rectangular tank 4-m long, 4 m wide and 2 m deep?

(9). A school water tank has a radius of 2.1 m and a height of 450 cm. How many litres of water does it carry when full?

(10). A rectangular tank whose internal dimensions are 2.2 m by 1.4 m by 1.7 m is three fifth full of milk.

a. Calculate the volume of milk in litres

b. The milk is packed in small packets in the shape of a right pyramid with an equilateral base triangle of sides 10 cm. The vertical height of each packet is 13.6 cm. Full packets obtained are sold at Shs. 30 per packet. Calculate:

25. The volume in cm^3 of each packet to the nearest whole number

26. The number of full packets of milk

27. The amount of money realized from the sale of milk 12. An 890 kg culvert is made of a hollow cylindrical material with

Time,distance and speed

Parameters of Motion

<u>Introduction</u>

- Distance between the two points is the length of the path joining them while displacement is the distance in a specified direction Speed
- Average speed = distance covered time taken

Example

A man walks for 40 minutes at 60 km/hour, then travels for two hours in a minibus at 80 km/hour.

Finally, he travels by bus for one hour at 60 km/h. Find his speed for the whole journey.

Solution

Average speed = distance covered

time taken

Total distance = (40/60 × 60)km + (2 × 80)km + (1 × 60)km = 260 km

Total time = 4 /6 + 2 + 1 = 32 /3 hrs

Average speed = 260

32 /3

33. 260 x 3 = 70.9 km/h

11

QUESTIONS

(1). Anne takes two hours to walk from home to her place of work, a distance of 8km. On a certain day, after walking for 30 minutes, she stopped for ten minutes to talk to a friend. At what average speed should she walk to reach on time?

(2). A motorist drove for 1 hour at 100 km/hr. She then travelled for 1 $^{1}/_{2}$ hours at a different speed. If the average speed for the whole journey was 88 km/hr, what was the average speed for the latter part of the journey?

(3). A commuter train moves from station A to station D via stations B and C in that order. The distance from A to C via B is 70 km and that from B to D via C is 88 km. Between the stations A and B, the train travels at an average speed of 48 km/h and takes 15 minutes. Between the stations C and D, the average speed of the train is 45 km/h. Find:

a. This distance from B to C

b. The time taken between C and D

Velocity and Acceleration

Velocity and Acceleration

- For motion under constant acceleration;
- Average velocity = initial velocity + final velocity /2

Example

A car moving in a given direction under constant acceleration. If its velocity at a certain time is 75 km/h

and 1 0 seconds later its 90 km/hr.

Solution

Acceleration = change in velocity /time taken

=(90 – 75)km/h 10s

21. (90 – 75) x 1000 m/s^2

10 x 60 x 60

22. 5 /12 m/s^2

<u>QUESTIONS</u>

(1). The initial velocity of a car is 10 m/s. The velocity of the car after 4 seconds is 30 m/s. Find its acceleration.

(2). A bus accelerates from a velocity of 12 m/s to a velocity of 25 m/s. Find the average velocity during this interval.

(3). A car moves with constant acceleration of $8m/s^2$ for 5 seconds. if the final velocity is 40 m/s, find the initial velocity.

(4). A train driver is moving 40 km/h applies brakes so that there is a constant retardation of $0.5\ m/s^2$. Find the time taken before the train stops.

Distance Time Graphs

Distance Time Graph

- When distance is plotted against time, a distance time graph is obtained.

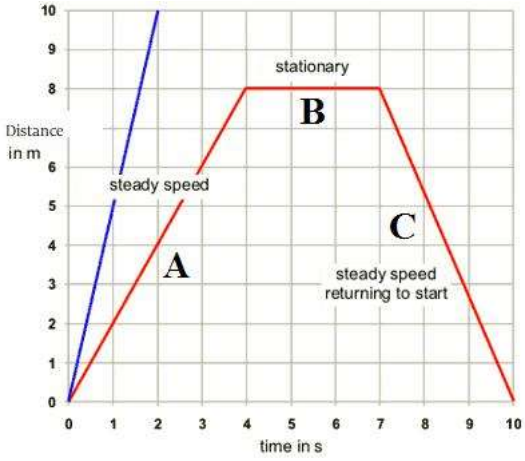

- When describing the motion of an object try to be as detailed as possible. For instance...
- During 'Part A' of the journey the object travels +8 m in 4s. It is travelling at a constant velocity of $+2ms^{-1}$
- During 'Part B' of the journey the object travels 0m in 3s. It is stationary for 3 seconds
- During 'Part C' of the journey the object travels -8m in 3s. It is travelling at a 'constant velocity' of '$-2.7ms^{-1}$' back to its starting point, our reference point 0

QUESTIONS

Example

(1). Table 17.1 shows the distance covered by a motorist from Limuru to Kisumu:

Time	9.00 a.m.	10.00 a.m.	11.00 a.m.	11.30 a.m.	12.00 noon	1.00 p.m.
Distance (km)	0	80	160	160	210	310

a. Draw the distance-time graph

b. Use the graph to answer the following questions:

i. How far was the motorist from limuru at 10.30 am?

ii. What was the average speed during the first part of the journey?

46. What was the average speed for the whole journey?

(2). A man leaves home at 9.00 am, and walks to a bus stop 6 km away at an average speed of 4 km/h. He then waits at the bus stop for 25 minutes before boarding a bus to a town 105 km away. The bus travels at an average speed of 60 km/h. Draw a distance time-graph for the journey and use it to answer the following questions

29. At what time was the man 100 km from home?

30. How far away from home was he at 10.15 am?

Velocity Time Graph

Velocity—time Graph

- When velocity is plotted against time, a velocity time graph is obtained.

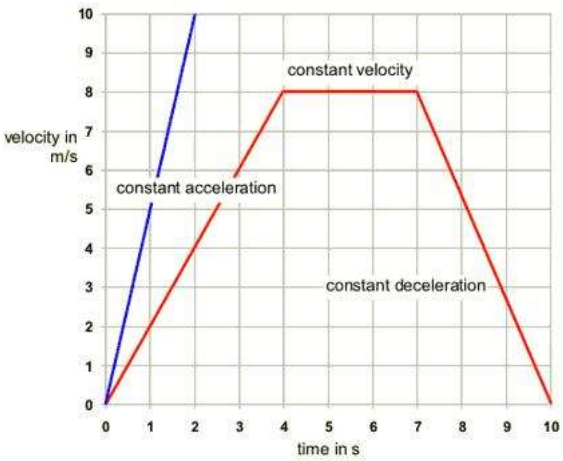

- The distance travelled is the area under the graph
- The acceleration and deceleration can be found by finding the gradient of the lines.

QUESTIONS

(1). The figure below is a velocity time graph for a car.

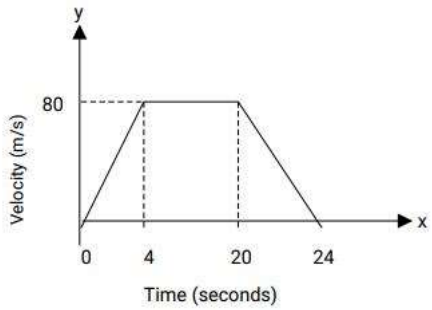

a. Find the total distance traveled by the car. (2 marks)

b. Calculate the deceleration of the car. (2 marks)

(2). A car is travelling at 40 m/s. its brakes are applied and it then decelerates at 8 m/s^2. Use a velocity-time graph to find the distance it travels before stopping

(3). A particle is projected vertically upwards with a velocity of 30 m/s. If the retardation to motion is 10 m/s^2, use a graphical method to find the maximum height reached by the particle.

Approaching Bodies

Relative Speed

- Consider two bodies moving in the different direction at different speeds. Their relative speed is the sum of the individual speeds.

Example

A truck left Nyeri at 7.00 am for Nairobi at an average speed of 60 km/h. At 8.00 am a bus left Nairobi for Nyeri at speed of 120 km/h .How far from Nyeri did the vehicles meet if Nyeri is 160 km from Nairobi?

Solution

Distance covered by the lorry in 1 hour = 1 x 60 = 60 km

Distance between the two vehicle at 8.00 am = 160 – 1 00

= 100km

Relative speed = 60 km/h + 120 km/h

Time taken for the vehicle to meet = $^{100}/_{180}$

= $^{5}/_{9}$ hours

Distance from Nyeri = 60 x $^{5}/_{9}$ x 60

22. 60 + 33.3

23. 93.3 km

<u>QUESTIONS</u>

(1). A matatus left town A at 7 a.m. and travelled towards a town B at an average speed of 60 km/h.

A second matatus left town B at 8 a.m. and travelled towards town A at 60 km/h. If the distance between the two towns is 400 km, find;

i. The time at which the two matatus met

ii. The distance of the meeting point from town A

(2). Two towns P and Q are 400 km apart. A bus left P for Q. It stopped at Q for one hour and then started the return journey to P. One hour after the departure of the bus from P, a trailer also heading for Q left P. The trailer met the returning bus $\frac{3}{4}$ of the way from P to Q. They met hours after the departure of the bus from P.

a. Express the average speed of the trailer in terms of t

b. Find the ratio of the speed of the bus to that of the trailer.

Overtaking Bodies

Relative Speed

- Consider two bodies moving in the same direction at different speeds. Their relative speed is the difference between the individual speeds.

Example

A van left Nairobi for kakamega at an average speed of 80 km/h. After half an hour, a car left Nairobi for Kakamega at a speed of 100 km/h.

a. Find the relative speed of the two vehicles.

b. How far from Nairobi did the car over take the van

Solution

Relative speed = difference between the speeds

10. 100 – 80

11. 20 km/h

Distance covered by the van in 30 minutes

Distance = $^{30}/_{60}$ x 80 = 40 km

Time taken for car to overtake matatu = $^{40}/_{20}$ = 2 hours

Distance from Nairobi = 2 x 100 = 200 km

QUESTIONS

(1). Two Lorries A and B ferry goods between two towns which are 3120 km apart. Lorry A traveled at km/h faster than lorry B and B takes 4 hours more than lorry A to cover the distance. Calculate the speed of lorry B

(2). Nairobi and Eldoret are each 250 km from Nakuru. At 8.1 5 am a lorry leaves Nakuru for Nairobi. At 9.30 am a car leaves Eldoret for Nairobi along the same route at 100 km/h. Both vehicles arrive at Nairobi at the same time.

a. Calculate their time of arrival in Nairobi

b. Find the cars speed relative to that of the lorry.

c. How far apart are the vehicles at 1 2.45 pm.

Determining time

LONGITUDES

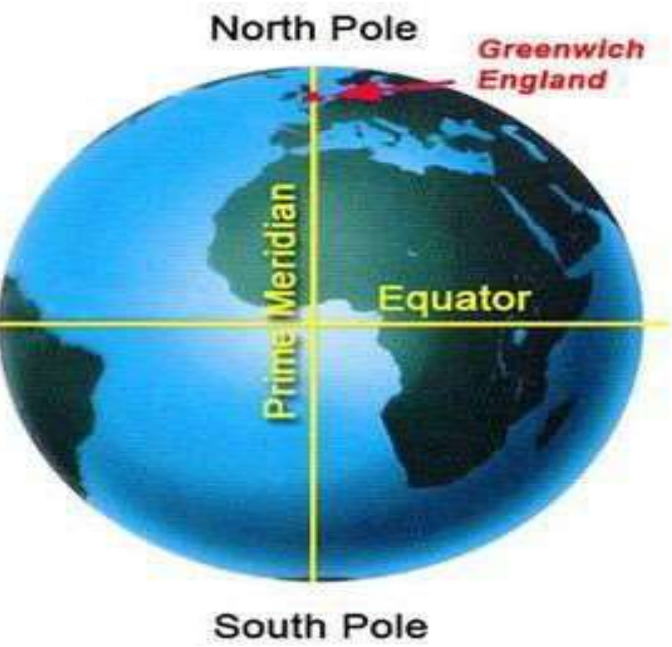

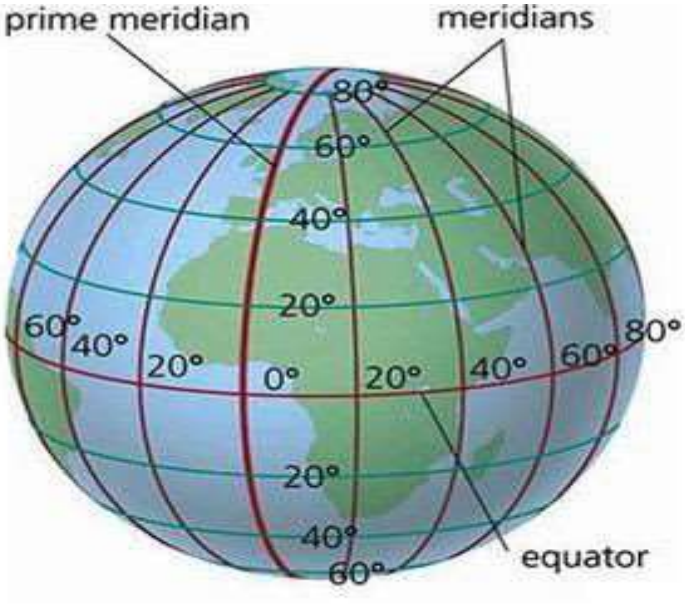

Calculating the time of different places in the world using longitudes

- Rotation of the earth- This is movement of earth on its own axis
- Distance between longitudes is measured in degrees
- There are 360 meridians or longitudes. That is, 180^0 to the East and 180^0 to the west.
- One complete rotation is 360°
- The direction of the rotation is from west to east i.e. anticlockwise direction.
- One complete rotation takes 24 hours
- All places found in the east of the Greenwich meridian will see sunrise first and therefore they are one hour ahead of those to the west
- If it takes 24 hours for the earth to rotate, it means in 1 hour, the earth covers 15^0 and 4 minutes to cover 1^0.
- when calculating time to the east of Greenwich Meridian, we add the time difference to the local time.
- When calculating time to the West of Greenwich Meridian, we subtract the time difference to the local time.

24hrs = 360°
1hr = ?
360×1 ÷24 =15
Therefore 1hr =15° or (24×60)minutes=1440min
360 °=
°= 1440÷360 ×1=4min
I Hr the earth covers 15° and 1° it covers 4 minutes

Calculating time of places found to the east of Greenwich Meridian

Example 1

The time in Accra 0° is 7.00am. Calculate time in bermbera 45° E

1hr =15°

? = 45° = 45÷15×1 =3hrs

So 3hrs is equivalent to 45° then add 3hrs to 7.00am to get 10.00am

Example 2

Suppose the time at GWM is 12 noon what is the local time at Watamu 40° E?

Time gained=40×4=160min=2 hours 40min

Local time at Watamu is 12.00+2.40=14.40-1200=2.40pm.

Example 3

At Dar-es-Salaam 40◦E time is 12pm what is the time at Ecuador 40◦E?

40◦+20◦=60◦

60×4=240min=4hours

Ecuador is behind in time =12.00-4=8 am.

NB

When calculating time to the east of Greenwich meridian, we add the time difference to the local time.

<u>Calculating time of places found to the west of Greenwich Meridian</u>

- When calculating time to the west of Greenwich meridian we subtract the time difference to the local time.

Example 1

If the time in Accra is 12.00 noon, what is the time in Dakar 17^0 W?

Find the difference in degree.

17^0-0^0

=17^0.

Calculate the difference in time between the two cities.

If 360 =24 hours

17^0 =?

17x24 ÷ 360

= 1 hr 08 minutes.

If the time in Accra 0^0 is 12.00 noon, then subtract the time difference to get the local time in Dakar.

12.00 noon

- 1. 08 mins

10. 52 am Dakar local time.

<u>Calculating time of places found to the East and west of Greenwich Meridian</u>

<u>Example 1</u>

A plane took off in Freetown 15^0 W at 7am local time.

What is the local time in Cape Town, 18^0 E

Calculate the number of degrees between Freetown and Cape town.

15^0 + 18^0 =33^0.

Calculate the time difference between the two cities.

If 360^0 = 24 hrs

Then 33^0 =?

33x24÷ 360

=2 hrs 12 minutes.

Since cape town is to the east of the Greenwich meridian, it means the city is a head of Freetown.

Therefore, to get time in Cape town, add the time difference to Freetown local time.
am + 2hrs 12 minutes= 9.12 am (Cape Town local time

MONEY

Calculating Profit

Profit

- The difference between the **cost price** and the **selling price** is either **profit or loss**. If the selling price is **greater than** the cost price, the difference is a **profit**.

Note:

- Selling price – cost price = profit

  Percentage profit = profit cost price x 100

Example:

Profit

Tirop bought a cow at Sh. 18 000 and sold it at sh. 21 000. What percentage profit did he make?

Solution

Selling price = Sh. 21 000

Cost price = Sh. 18 000

Profit = Sh. (21 000 – 18 000)

= sh. 3 000

Percentage profit = 3000/18000 x 10

= 1623%

EXCERCISE

(1). Abdi bought a pair of trousers for Sh. 650 and later sold it at Sh. 720. What profit did he make?

(2). A trader bought a 50 kg bag of sugar at Sh. 2 100. She sold the sugar at Sh. 50 per kilogram. What was the percentage profit?

(3). Parpai bought a textbook at Sh. 450 and later sold it at Sh. 500. What was the percentage profit?

(4). A businessman bought a bag containing 50 mangoes for Sh. 250. He sold the mangoes at sh. 10 each. If 5 mangoes were bad, what was his percentage profit?

(5). A lady Sold blouses at Sh. 1 500 each. She made a profit of sh. 150 for each blouse. How much did she pay for each?

(6). Tina bought a bag containing 80 tomatoes for Sh. 270. She sold the tomatoes in piles of four, making a profit of 50%. For how much did she sell each pile?

(7). A trader sold an article at Sh. 4800 after allowing his customer a 12% discount on the marked price of the article. In so doing he made a profit of 45%.

a. Calculate the price at which the trader had bought the

b. If the trader had sold the same article without giving a discount. Calculate the percentage profit he would have made.

(8). A man imported a vehicle at Shs. 600,000 and sold it at Sh. 1,080,0000. Find his percentage profit if he spent Sh. 60,000 for clearing the vehicle from the port and a further Sh. 40,000 for shipping.

(9). A farmer made a profit of 28% by selling a goat for Sh.1440. What percentage profit would he have made if he had sold the goat for Sh. 2100?

(10). Mr. Sitienei sold a house to Mr. Lagat at a profit of 10%. Mr. Lagat then sold it to Mr. Rotich at a profit of 5%. Mr. Rotich paid Ksh 110,000 more than Mr. Lagat for the house. Find how much Mr. Rotich paid for the house.

Calculating Loss

Loss

- This is the difference between the **cost price** and the **selling price** when the cost price is **greater than** the selling price.

Formula

Loss = Cost price - selling price

Percentage Loss =

$$\frac{Loss}{Cost\ price} \times 100\ \%$$

Example;

(i). Abdi bought a pair of trousers for Sh 720 and sold it at Sh 650. What percentage loss did he make?

Solution

Cost price = sh. 720

Selling price = sh. 650

Loss = sh. 720 – sh. 650

= sh. 70

34. Loss =

$$\frac{sh.\ 70}{sh.\ 720} \times 100\% = 9.722\%$$

(ii). Calculate the loss incurred if Juma bought a 60 kg bag of sugar at Sh. 2 100. She sold the sugar at sh. 30 per kilogram.

Solution

Loss = Cost price – selling price

Selling Price for 60 kg = Selling Price per kg × Weight (kg)

Selling Price for 60 kg = Sh 30 × 60 kg = Sh 1800

Selling Price for 60 kg = Sh 30 × 60kg = Sh 1800

Now, we can calculate the loss:

Loss = Cost Price – Selling Price

Loss = Cost Price – Selling Price

Loss = Sh 2100 – 1800

Loss = Sh 2100 – 1800

Loss = Sh 300

EXERCISE;

(1). An entrepreneur purchased a bag that held 50 apples for Sh. 250. He charged sh. 8 for each apple. What loss did he make if 15 apples were bad?

(2). Jane sold a dress she had purchased for Sh. 2 800 after paying Sh. 3 500 for it. What was her percentage loss?

(3). A retailer bought a batch of 50 shirts for Sh 1,000. Due to some defects, 5 shirts were unsellable. If the retailer sold the remaining shirts at Sh 25 each, find the overall loss.

(4). There is a 25 % loss when an article is sold at Sh. 200. At what price should it be sold to reduce the loss to 5 %?

(5). Parpai bought a textbook at Sh. 450 and later sold it at Sh. 400. What was the percentage loss?

(6). A shopkeeper made a loss of 30% by selling an electric iron at Sh 700. What loss would he have made had he sold it at Sh 500?

(7). A man bought 10 mangoes at Sh. 10.00 each. He ate four of the mangoes and sold the remainder, making an overall loss of Sh. 16.00 Calculate his selling price per mango, hence the percentage loss on each mango.

(8). A book seller sold Distinction Mathematics text book for Sh. 720 making a 10% loss. How much would he have sold the book to reduce the loss to 2% ?

(9). Kombo bought a bull for Sh. 28 000 and later sold it for Sh. 26 600. What percentage loss did he make?

(10). A trader bought 500 oranges for Sh 4 000. During the transportation 20 of them got spoilt. She sold the remaining in piles of 5 at Sh 20. What percentage loss did she make?

What is Discount?

Discount

- A shopkeeper may decide to sell an article at a reduced price. The difference between the marked price and the reduced price is referred to as the discount.
- Discount is usually expressed as a percentage of the actual marked price.

Example:

The price of an article is marked at Sh. 120.00. A discount is allowed and the article sold at Sh. 96.00 Calculate the percentage discount.

Solution

Actual price = Sh. 120.00

Reduced price = Sh. 96.00

Discount

10. Sh. (120.00 – 96.00)
11. Sh. 24

Percentage discount

$$= \frac{24 \times 100}{120}$$

= 20%

EXERCISE

(1). The marked price of a shirt was Sh. 500.00. The shopkeeper offered a discount and sold it at Sh. 480. Calculate the percentage discount.

(2). Mama Mwanyumba bought the following goods from a supermarket: 3 kg of sugar @Sh. 46.00

2 loaves of bread @Sh. 22.50

4 packets of milk @Sh. 25.50

a. How much did she pay, for the goods?

b. How much would she have paid for the goods had she been allowed a 10% discount?

(3). Jane paid Sh. 12 000 for a T.V. set after she was allowed a discount of 16%. What was the marked price of the T.V?

(4). A school bought textbooks worth Sh. 27 027 from a bookseller. If the bookseller allowed a discount of 10%, what was the cost of the books without the discount?

(5). A farmer was allowed a cash discount of Sh. 175 on farm implements worth Sh. 3 500. What was the percentage discount?

(6). Calculate the marked price on a bag of cement selling at Sh. 570 after a discount of 5% is offered.

(7). An umbrella and a pen are sold at a discount of 8% and 3% respectively. Calculate the overall discount offered on the two commodities, if the cost of the umbrella is four times that of the pen.

(8). One day Mr. Makori bought some oranges worth Ksh 45, on another day of the same week his wife Mrs. Makori spent the same amount of Money but bought the oranges at a discount of 75 cents per orange

a. If Mr. Makori bought an orange at Ksh. x, write down and simplify an expression for the total number of oranges bought by the two in the week.

b. If Mrs. Makori bought 2 oranges more than her husband, find how much each spent on an orange.

(9). The marked price of a shirt is Sh. 800. A customer buys the shirt after being given a discount of 13%. The seller then realizes that he made a profit of 20% on this sale. Find how much the seller had bought the shirt.

(10). A trader sold an article at Sh. 4800 after allowing his customer a 12% discount on the marked price of the article. In so doing he made a profit of 45%. Calculate the marked price of the article.

What is a Commission?

<u>Commission</u>

- A commission is an agreed rate of payment, usually expressed as a percentage, to an agent for his services. Some employers offer a commission as an additional reward on top of a fixed salary, whereas others provide a commission-based salary only.
- Commission can be an excellent tool for motivating employees to meet performance objectives in terms of sales and profit growth. It can be especially beneficial to small businesses, as the wages they pay out are proportional to the performance outcomes of their workforce.

Formula

Commission Rate = $\frac{Commission}{sales} \times 100$

Example:

Mr. Nyongesa, a salesman in a soap industry, sold 250 pieces of toilet soap at Sh. 45.00 and 215 packets of detergent at Sh. 75.00 per packet. If he got a 5% commission on the sales, how much money did he get as commission?

Solution

Sales for the toilet soap was 250 x 45 = Sh. 11,250

Sales for the detergent was 215 x 75 = Sh. 16,125

Commission = $^{5}/_{100}$ (11,250+ 16,125)

24. $^{5}/_{100}$ x 27,375

25. Sh. 1368.75

EXERCISE

(1). Miss Onyango sold goods worth Sh. 12 000 at a commission of 5%. How much commission did she get?

(2). Chris works as a salesman. He is paid a salary of Sh. 24 000 per month plus a commission of 2% of his sales. In one month, he sold goods worth Sh. 100 000. How much did he earn altogether during that month?

(3). A salesman is paid a salary of Sh. 12 000 per month. He is also paid a commission of 2% on sales up to Sh. 15 000 and 21% on sales above that amount. In one month, he sold goods worth Sh. 2 500. How much was he paid that month?

(4). Simon earned Sh. 400 as a commission for a sale of goods worth Sh. 16 000. What would be his commission for a total sale of Sh. 7 000?

(5). A saleswoman was paid a monthly salary of Sh. 20 000 plus commission on goods sold. In one month, she sold goods worth Sh. 40 000. At the end of that month, her total earnings were Sh. 21 200. What percentage commission was she given?

(6). A saleslady was paid a monthly salary plus a commission of 8% on goods sold. In one month, she sold goods worth Sh. 64 000 and her total earnings were Sh. 23 120. What was her basic salary without commission?

(7). A salesman earns 25% commission. His sales amounted to Sh. 2 450 after giving buyers a 2% discount. Calculate his commission. Suppose all the goods were sold at the marked price, what would be his earnings?

(8). A company saleslady sold goods worth Kshs 240,000 from this sale she earned a commission of Kshs 4 000. Calculate the rate of commission;

a. If she sold good whose total marked price was Kshs 360 000 and allowed a discount of 2% calculate the amount of commission she received.

(9). A car dealer charges 5% commission for selling a car. He received a commission of Kshs17 500 for selling car. How much money did the owner receive from the sale of his car?

(10). A salesman gets a commission of 2.4 % on sales up to Kshs 100 000. He gets an additional commission of 1.5% on sales above this. Calculate the commission he gets on sales worth Kshs 280 000.

Simple Interest

- Interest is the money charged for the use of borrowed money for a specific period of time.
- If money is borrowed or deposited it earns interest, Principle is the sum of money borrowed or deposited P, Rate is the ratio of interest earned in a given period of time to the principle.
- The rate is expressed as a percentage of the principal per annum (P.A).
- When interest is calculated using only the initial principal at a given rate and time, it is called **simple interest** (I).

Simple Interest Formulae

Simple interest = principle x $\frac{\text{rate}}{100}$ x time

Example

Franny invests ksh 16,000 in a savings account. She earns a simple interest rate of 14%, paid annually on her investment. She intends to hold the investment for $1\frac{1}{2}$years. Determine the future value of the investment at maturity.

Solution

35. = $\frac{PRT}{100}$
    12. sh. 16000 x $\frac{14}{100}$ x $\frac{3}{2}$
    13. sh 3360

    26. sh.16000 + sh 3360
    27. sh.19360

Example

Calculate the rate of interest if sh 4500 earns sh 500 after $1\frac{1}{2}$years.

Solution

From the simple interest formulae

28. =

P

R

T

1

0

0

$R = \frac{100 \times I}{P \times T}$

P = sh 4500

I = sh 500

T = $1\frac{1}{2}$years

Therefore $R = \frac{100 \times 500}{4500 \times 3/2}$

R=7.4%

Example

Esha invested a certain amount of money in a bank which paid 1 2% p.a. simple interest. After 5 years, his total savings were sh 5600.Determine the amount of money he invested initially.

Solution

Let the amount invested be sh P

T = 5 years

R = 12 % p.a.

A =sh 5600

But A = P + I

Therefore $5600 = P + P \times \frac{12}{100} \times 5$

36. P+0.60P
37. 1.6 P

Therefore $P = \frac{5600}{1.6}$

= sh 3500

Compound Interest

- Suppose you deposit money into a financial institution, it earns interest in a specified period of time.
- Instead of the interest being paid to the owner it may be added to (compounded with) the principle and therefore also earns interest.
- The interest earned is called compound interest. The period after which its compounded to the principle is called interest period.
- The compound interest maybe calculated annually, semi-annually, quarterly, monthly etc.
- If the rate of compound interest is R% p.a and the interest is calculated n times per year, then the rate of interest per period is $(R/n)\%$

Example

Moyo lent ksh.2000 at interest of 5% per annum for 2 years. First we know that simple interest for 1 st year and 2nd year will be same

i.e. = 2000 x 5 x $^{1}/_{100}$ = Ksh. 100

Total simple interest for 2 years will be = 100 + 100 = ksh. 200

In Compound Interest (CI) the first year Interest will be same as of Simple Interest (SI) i.e. Ksh.100.

But year II interest is calculated on P + SI of 1 st year i.e. on ksh. 2000 + ksh. 100 = ksh. 2100. So,

year II interest in Compound Interest becomes

$= 2100 \times 5 \times {}^{1}/_{100} =$ Ksh. 105

So it is Ksh. 5 more than the simple interest. This increase is due to the fact that SI is added to the principal and this ksh.

105 is also added in the principal if we have to find the compound interest after 3 years.

Direct formula in case of compound interest is

$$A = P\left(1 + \frac{r}{100}\right)^{t}$$

Where A = Amount

P = Principal

r = Rate % per annum

t = Time

A=P+CI

$$P\left(1 + \frac{r}{100}\right)t = P + CI$$

Types of Question

- Type I: To find CI and Amount
- Type II: To find rate, principal or time
- Type III: When difference between CI and SI is given.
- Type IV: When interest is calculated half yearly or quarterly etc.
- Type V: When both rate and principal have to be found.

Type 1

Example

Find the amount of ksh. 1000 in 2 years at 10% per annum compound interest.

Solution.

$A = P\left(1 + {}^{r}/_{100}\right)^{t}$

$=1000\left(1 + {}^{10}/_{100}\right)^{2}$

$= 1000 \times {}^{121}/_{100}$

=ksh. 1210

Example

Find the amount of ksh. 6250 in 2 years at 4% per annum compound interest.

Solution

$A = P\left(1 + {}^{r}/_{100}\right)t$

38. $6250\left(1 + {}^{4}/_{100}\right)^{2}$
    $=6250 \times {}^{676}/_{625}$
39. ksh. 6760

Example

What will be the compound interest on ksh 31 250 at a rate of 4% per annum for 2 years?

Solution.

$CI = P\,(1 + {}^{r}/_{100})^{t} - 1$

$= 31250\,\{\,(1 + {}^{4}/_{100})^{2} - 1\,\}$

$= 31250\,(\,{}^{676}/_{625} - 1\,)$

$= 31250 \times {}^{51}/_{625} =$ ksh. 2550

Example

A sum amounts to ksh. 24200 in 2 years at 10% per annum compound interest. Find the sum ?

Solution.

24200 = P (1 + 10/100)2

40. $P\left(\frac{11}{10}\right)^2$
41. $24200 \times \frac{100}{121}$
42. ksh. 20000

Type II

Example.

The time in which ksh. 15625 will amount to ksh. 17576 at 4% compound interest is?

Solution

$A = P\left(1 + \frac{r}{100}\right)^t$

$17576 = 15625\left(1 + \frac{4}{100}\right)^t$

$\frac{17576}{15625} = \left(\frac{26}{25}\right)^t$

$\left(\frac{26}{25}\right)^t = \left(\frac{26}{25}\right)^3$

t = 3 years

Example

The rate percent if compound interest of ksh. 15625 for 3 years is Ksh. 1951.

Solution.

A=P+CI

= 15625 + 1951 = ksh. 1 7576

$A = P\left(1 + \frac{r}{100}\right)^t$

$17576 = 15625\left(1 + \frac{r}{100}\right)^3$

$17576/1\,5625 = \left(1 + \frac{r}{100}\right)^3$

$\left(\frac{26}{25}\right)^3 = \left(1 + \frac{r}{100}\right)^3$

$\frac{26}{25} = 1 + \frac{r}{100}$

$\frac{26}{25} - 1 = \frac{r}{100}$

$\frac{1}{25} = \frac{r}{100}$

r = 4%

Type IV

1. Remember

   - When interest is compounded half yearly then Amount = $P\left(1 + \frac{R}{2}\right)^{2t}$ 100
     I.e. in half yearly compound interest rate is halved and time is doubled.

28. When interest is compounded quarterly then rate is made $\frac{1}{4}$ and time is made 4 times. Then A = P [(1 +R/4)/100]4t

29. When rate of interest is R_1%, R_2%, and R_3% for 1st, 2nd and 3rd year respectively; then $A = P(1 + R_1/100)(1 + R_2/100)(1 + R_3/100)$

Example

Find the compound interest on ksh.5000 at 20% per annum for 1.5 year compound half yearly.

Solution.

Amount = 5000 [(1 + 20/2)/100]3/2 × 2

(ix) 5000 $(1 + {}^{10}/_{100})^{3}$

=5000 × ${}^{1331}/_{1000}$

(x) ksh 6655

CI = 6655 – 5000 = ksh. 1655

Example

Find compound interest ksh. 47145 at 12% per annum for 6 months, compounded quarterly.

Solution.

A = 471 45 [(1 + 12/4)/100]½ x 4

9. 47145 $(1 + {}^{3}/_{100})^{2}$

10. 47145 × ${}^{103}/_{100}$ × ${}^{103}/_{100}$

11. ksh. 50016.13

CI = 50016.13 – 471 45

= ksh. 2871.13

Example

Find the compound interest on ksh. 1 8750 for 2 years when the rate of interest for 1st year is 4% and for 2nd year 8%.

Solution.

A = P $(1 + {}^{R1}/_{100})$ $(1 + {}^{R1}/_{100})$

= 18750 × ${}^{104}/_{100}$ × ${}^{108}/_{100}$

=ksh. 21060

CI = 21060 – 18750

= ksh. 2310

Type V

Example

The compound interest on a certain sum for two years is ksh. 52 and simple interest for the same period at same rate is ksh. 50, find the sum and the rate.

Solution.

We will do this question by basic concept. Simple interest is same every year and there is no difference between SI and CI for 1 st year.

The difference arises in the 2nd year because interest of 1 st year is added in principal and interest is now charged on principal + simple interest of 1 st year.

So in this question

2 year SI = ksh. 50

1 year SI = ksh. 25

Now CI for 1 st year = 52 - 25 = Ksh. 27

This additional interest 27 -25 = ksh. 2 is due to the fact that 1 st year SI i.e. ksh. 25 is added in principal.

It means that additional ksh. 2 interest is charged on ksh. 25. Rate % = $^{2}/_{25}$ x 100 = 8%

Shortcut:

Rate % = [(CI - SI)/(SI/2)] x 1 00

6. [($^{2}/_{50}$)/2] x

100 $^{2}/_{25}$ x 100

=8%

P = SI x $^{100}/_{R}$ x T = 50 x $^{100}/_{8}$ x 2

= ksh. 312.50

Example

A sum of money lent CI amounts in 2 year to ksh. 8820 and in 3 years to ksh. 9261 . Find the sum and rate.

Solution.

Amount after 3 years = ksh. 9261

Amount after 2 years = ksh. 8820

By subtracting last year's interest ksh. 441

It is clear that this ksh. 441 is SI on ksh. 8820 from 2nd to 3rd year i.e. for 1 year.

Rate % = 441 x $^{100}/_{8820}$ x 1

=5 %

Also A = P (1 + $^{r}/_{100}$)^{t}

8820 = P (1 + $^{5}/_{100}$)^{2}

= P ($^{21}/_{20}$)^{2}

P = 8820 x 400/441

= ksh. 8000

Appreciation and Depreciation

Appreciation is the gain of value of an asset while depreciation is the loss of value of an asset.

Example

An iron box cost ksh 500 and every year it depreciates by 1 0% of its value at the beginning of that that year. What will its value be after value 4 years?

Solution

Value after the first year = sh (500 – $\frac{10}{100}$ x 500)

= sh 450

Value after the second year = sh (450 – $\frac{10}{100}$ x 450)

= sh 405

Value after the third year = sh (405 – $\frac{10}{100}$ x 405)

= sh 364.50

Value after the fourth year = sh (364.50 – $\frac{10}{100}$ x 364.50)

= sh 328.05

In general if P is the initial value of an asset, A the value after depreciation for n periods and r the rate of depreciation per period.

$A=P(1 - {}^{r}/100)^{n}$

Example

A minibus cost sh 400000.Due to wear and tear, it depreciates in value by 2 % every month. Find its value after one year,

Solution

$A=P(1 - {}^{r}/_{100})^{n}$

Substituting P= 400,000 , r = 2 , and n =12 in the formula ;

A =sh.400000 $(1 - 0.02)^{12}$

=sh.400,000$(0.98)^{12}$

= sh.313700

Example

The initial cost of a ranch is sh.5000, 000.At the end of each year, the land value increases by 2%.What will be the value of the ranch at the end of 3 years?

Solution

The value of the ranch after 3 years =sh 5,000, 000$(1 + {}^{2}/_{100})^{3}$

68. sh. 5,000,000$(1.02)^{3}$
69. sh 5,306,040

Hire Purchase

- Method of buying goods and services by instalments. The interest charged for buying goods or services on credit is called carrying charge.
  Hire purchase = Deposit + (instalments x time)

Example

Achieng wants to buy a sewing machine on hire purchase. It has a cash price of ksh 7500. She can pay a cash price or make a down payment of sh 2250 and 15 monthly instalments of sh.550 each. How much interest does she pay under the instalment plan?

Solution

Total amount of instalments = sh 550 x 15 = sh 8250

Down payment (deposit) = sh 2250

Total payment = sh (8250 + 2250) = sh 10500

Amount of interest charged = sh (10500-7500)

= sh3000

Note;

- Always use the above formula to find other variables.

Income Tax

- Taxes on personal income is income tax. Gross income is the total amount of money due to the individual at the end of the month or the year.
  Gross income = salary + allowances / benefits

- Taxable income is the amount on which tax is levied. This is the gross income less any special benefits on which taxes are not levied. Such benefits include refunds for expenses incurred while one is on official duty. - In order to calculate the income tax that one has to pay, we convert the taxable income into Kenya pounds K£ per annum or per month as dictated by the by the table of rates given.

Relief

- Every employee in kenya is entitled to an automatic personal tax relief of sh.12672 p.a (sh.1 056 per month) • An employee with a life insurance policy on his life, that of his wife or child, may make a tax claim on the premiums paid towards the policy at sh.3 per pound subject to a maximum claim of sh .3000 per month.

Example

Mr. John earns a total of K£ 12300 p.a.Calculate how much tax he should pay per annum.Using the tax table below.

Income tax K£ per annum	Rate (sh per pound)
- 1 5808	2
5809 - 1 1 280	3
1 1 289 - 1 6752	4
6753 1 - 22224	5
Excess over 22224	6

Solution

His salary lies between £ 1 and £1 2300.The highest tax band is therefore the third band.

For the first £5808, tax due is	sh 5808 x 2 = sh 11616
For the next £5472, tax due is	sh 5472 x 2 = sh 16416
Remaining £1020, tax due	sh. 1020 x 4 = sh 4080 +
Total tax due	sh 32112
Less personal relief of	sh.1056 x 12 = sh.12672 –
	Sh 19440

Therefore payable p.a is sh.19400.

Example

Mr. Ogembo earns a basic salary of sh 15000 per month.in addition he gets a medical allowance of sh 2400 and a house allowance of sh 12000.Use the tax table above to calculate the tax he pays per year.

Solution

Taxable income per month = sh (15000 + 2400 + 12000) = sh.29400

Converting to K£ p.a = K£ $\frac{29400}{20}$ x 12

= K£ 1 7640

Tax due

First £ 5808 = sh.5808 x 2 =	sh. 11616
Next £ 5472 = sh.5472 x 3 =	sh. 16416
Next £ 5472 = sh.5472 x 4 =	sh. 21888
Remaining £ 888 = sh.888 x 5 = sh	4440+
Total tax due	sh 54360
Less personal relief	sh 12672 –
Therefore, tax payable p.a	sh 41688

PAYE

- In Kenya, every employer is required by the law to deduct income tax from the monthly earnings of his employees every month and to remit the money to the income tax department.
- This system is called Pay As You Earn (PAYE).

Housing

- If an employee is provided with a house by the employer (either freely or for a nominal rent) then 15% of his salary is added to his salary (less rent paid) for purpose of tax calculation.
- If the tax payer is a director and is provided with a free house, then 1 5% of his salary is added to his salary before taxation.

Example

Mr. Omondi who is a civil servant lives in government house who pays a rent of sh 500 per month. If his salary is £9000 p.a, calculate how much PAYE he remits monthly.

Solution

Basic salary £ 9000

Housing £ $\frac{15}{100} \times 9000$ = £1350

Less rent paid = £1350 – £ 300 = £ 1050

Taxable income

Tax charged;

First £ 5808, the tax due is sh.5808 x 2 = sh 11616

Remaining £ 4242, the tax due is sh 4242 x 3 = sh 12726 +

sh 24342

Less personal relief sh 12672 –

sh 11670

PAYE = sh $\frac{11670}{12}$

= sh 972.50

Example

Mr. Odhiambo is a senior teacher on a monthly basic salary of Ksh. 1 6000.On top of his salary he gets a house allowance of sh 1 2000, a medical allowance of Ksh.3060 and a hardship allowance of Ksh 3060 and a hardship allowance of Ksh.4635.He has a life insurance policy for which he pays Ksh.800 per month and claims insurance relief.

10. Use the tax table below to calculate his PAYE.

Income in £ per month	Rate %
1-484	10
485 - 940	15
941 - 1 396	20
1397- 1 852	25
Excess over 1 852	30

11. In addition to PAYEE the following deductions are made on his pay every month

    WCPS at 2% of basic salary

    HHIF ksh.400

    Co – operative shares and loan recovery Ksh 4800.

Solution

113. Taxable income = Ksh (16000 + 12000 + 3060 + 4635) =

    ksh 35695

Converting to K£ = K£ $\frac{35695}{20}$

= K£ 1784.75

Tax charged is:

First £ 484 = £484 x $\frac{10}{100}$ = £ 48.40

Next £ 456 = £456 x $\frac{15}{100}$ = £ 68.40

Next £ 456 = £456 x $\frac{10}{100}$ = £ 91 .20

Remaining £ 388 = £388 x $\frac{25}{100}$ = £ 97.00.

Total tax due = £305.00

= sh 61 00

Insurance relief = sh $\frac{800}{20}$ x 3 = sh 120

Personal relief = sh 1056

Total relief 120 + 1056 = sh 1176

Tax payable per month is sh 6100

less total relief sh 1176 –

sh 4924

Therefore, PAYE is sh 4924.

Note;

- For the calculation of PAYE, taxable income is rounded down or truncated to the nearest whole number.
- If an employee's due tax is less than the relief allocated, then that employee is exempted from PAYEE

15. Total deductions are

Sh ($\frac{2}{}$ x 16000 + 400 + 4800 + 800 + 4924) = sh 11244 100

Net pay = sh (35695 – 11244) =

sh 24451

Questions

16. A business woman opened an account by depositing Kshs. 12,000 in a bank on 1st July 1995. Each subsequent year, she deposited the same amount on 1st July. The bank offered her 9% per annum compound interest. Calculate the total amount in her account on 30

    30th June 1 996

    30th June 1 997

17. A construction company requires to transport 1 44 tonnes of stones to sites A and B. The company pays Kshs 24,000 to transport 48 tonnes of stone for every 28 km. Kimani transported 96 tonnes to a site A, 49 km away.

    Find how much he paid

    Kimani spends Kshs 3,000 to transport every 8 tonnes of stones to site.

    Calculate his total profit.

    Achieng transported the remaining stones to sites B, 84 km away. If she made 44% profit, find her transport cost.

18. The table shows income tax rates

Monthly taxable pay	Rate of tax Kshs in 1 K£

1-435	2
436 – 870	3
168. -1305	4
1306 – 1740	5
Excess Over 1740	6

A company employee earn a monthly basic salary of Kshs 30,000 and is also given taxable allowances amounting to Kshs 1 0, 480.

Calculate the total income tax

The employee is entitled to a personal tax relief of Kshs 800 per month.

Determine the net tax.

If the employee received a 50% increase in his total income, calculate the corresponding percentage increase on the income tax.

11. A house is to be sold either on cash basis or through a loan. The cash price is Kshs.750, 000. The loan conditions area as follows: there is to be down payment of 10% of the cash price and the rest of the money is to be paid through a loan at 1 0% per annum compound interest. A customer decided to buy the house through a loan.

    i. Calculate the amount of money loaned to the customer.
    ii. The customer paid the loan in 3 year's. Calculate the total amount paid for the house.

    Find how long the customer would have taken to fully pay for the house if she paid a total of Kshs 891,750.

12. A businessman obtained a loan of Kshs. 450,000 from a bank to buy a matatu valued at the same amount. The bank charges interest at 24% per annum compound quarterly

    Calculate the total amount of money the businessman paid to clear the loan in 1 $\frac{1}{2}$ years.

    The average income realized from the matatu per day was Kshs. 1 500. The matatu worked for 3 years at an average of 280 days year. Calculate the total income from the matatu.

    During the three years, the value of the matatu depreciated at the rate of 1 6% per annum. If the businessman sold the matatu at its new value, calculate the total profit he realized by the end of three years.

13. A bank either pays simple interest as 5% p.a or compound interest 5% p.a on deposits. Nekesa deposited Kshs P in the bank for two years on simple interest terms. If she had deposited the same amount for two years on compound interest terms, she would have earned Kshs 210 more. Calculate without using Mathematics Tables, the values of P

7.

    a. A certain sum of money is deposited in a bank that pays simple interest at a certain rate. After 5 years the total amount of money in an account is Kshs 358400. The interest earned each year is 12 800

       Calculate

       i. The amount of money which was deposited
       ii. The annual rate of interest that the bank paid

    b. A computer whose marked price is Kshs 40,000 is sold at Kshs 56,000 on hire purchase terms

       i. Kioko bought the computer on hire purchase terms. He paid a deposit of 25% of the hire purchase price and cleared the balance by equal monthly installments of Kshs 2625. Calculate the number of installments (3mks)
       ii. Had Kioko bought the computer on cash terms he would have been allowed a discount of 1 $2\frac{1}{2}$ % on marked price. Calculate the difference between the cash price and the hire purchase price and express as a percentage of the cash price
       iii. Calculate the difference between the cash price and hire purchase price and express it as a percentage of the cash price.

8. The table below is a part of tax table for monthly income for the year 2004

	Monthly taxable income In (Kshs)
	Under Kshs 9681

Tax rate percentage ch shillings 10%
(%) i
n

e
a

From Kshs 9681 but under 1 8801 15%

From Kshs 1 8801 but 27921	20%

In the tax year 2004, the tax of Kerubo's monthly income was Kshs 1916. Calculate Kerubo's monthly income

9. The cash price of a T.V set is Kshs 1 3, 800. A customer opts to buy the set on hire purchase terms by paying a deposit of Kshs 2280. If simple interest of 20 p. a is charged on the balance and the customer is required to repay by 24 equal monthly installments. Calculate the amount of each installment.

10. A plot of land valued at Ksh. 50,000 at the start of 1 994. Thereafter, every year, it appreciated by 1 0% of its previous years value find:
    a. The value of the land at the start of 1 995
    b. The value of the land at the end of 1 997
11. The table below shows Kenya tax rates in a certain year.

Income K £ per annum	Tax rates Kshs per K £
1 -4512	2
451 3 - 9024	3
9025 - 1 3536	4
1 3537 - 1 8048	5
1 8049 - 22560	6
Over 22560	6.5

In that year Muhando earned a salary of Ksh. 1 651 0 per month. He was entitled to a monthly tax relief of Ksh. 960,

Calculate

    a. Muhando annual salary in K £
    b. The monthly tax paid by Muhando in Ksh
12. A tailor intends to buy a sewing machine which costs Ksh 48,000. He borrows the money from a bank. The loan has to be repaid at the end of the second year. The bank charges an interest at the rate of 24% per annum compounded half yearly. Calculate the total amount payable to the bank.
13. The average rate of depreciation in value of a water pump is 9% per annum. After three complete years its value was Ksh 1 50,700. Find its value at the start of the three year period.
14. A water pump costs Ksh 21 600 when new, at the end of the first year its value depreciates by 25%. The depreciation at the end of the second year is 20% and thereafter the rate of depreciation is 1 5% yearly. Calculate the exact value of the water pump at the end of the fourth year

Approximation and Errors

Approximation

Approximation involves rounding off and truncating numbers to give an estimation

Rounding Off

In rounding off the place value to which a number is to be rounded off must be stated.

The digit occupying the next lower place value is considered.

The number is rounded up if the digit is greater or equal to 5 and rounded down if it's less than 5.

Example

Round off 395.184 to:

36. The nearest hundreds
37. Four significant figures
38. The nearest whole number
39. Two decimal places

Solution

14. 400
15. 395.2
16. 395
17. 395.18

Truncating

Truncating means cutting off numbers to the given decimal places or significant figures, ignoring the rest.

Example

Truncate 3.2465 to

29. 3 decimal places
30. 3 significant figures

Solution

31.3.246

32. 3.24

Estimation

Estimation involves rounding off numbers in order to carry out a calculation faster to get an approximate answer .This acts as a useful check on the actual answer.

Example

Estimate the answer to $\frac{152 \times 269}{32}$

Solution

The answer should be close to $\frac{150 \times 270}{30} = 1350$

The exact answer is 1 277.75. 1 277.75 writen to 2 significant figures is 1 300 which is close to the estimated answer.

Accuracy and Error

Absolute Error

The absolute error of a stated measurement is half of the least unit of measurement used.

When a measurement is stated as 3.6 cm to the nearest millimeter, it lies between 3.55 cm and 3.65 cm.

The least unit of measurement is milliliter, or 0.1 cm.The greatest possible error is 3.55 - 3.6 = -0.05 or 3.65 - 3.6 = + 0.05.

To get the absolute error we ignore the sign. So the absolute error is 0.05 thus,|-0.05| =| +0.05|= 0.05.

When a measurement is stated as 2.348 cm to the nearest thousandths of a centimeters (0.001) then the absolute error is $^{1}/_{2} \times 0.001 = 0.0005$.

Relative Error

$$\text{Relative error} = \frac{\text{absolute}}{\text{actual measurements}}$$

Example

An error of 0.5 kg was found when measuring the mass of a bull.if the actual mass of the bull was found to be 200kg.

Find th relative error

Solution

$$\text{elative error} = \frac{\text{absolute}}{} = \frac{0.5\text{ kg}}{} = 0.0025$$

actual measurements 200

Percentage Error

Percentage error = relative error x 1 00%

$$= \frac{\text{absolute error}}{\text{actual measurment}} \times 100\%$$

Example

The thickness of a coin is 0.20 cm.

43. The percentage error
44. What would be the percentage error if the thickness was stated as 0.2 cm ?

Solution

The smallest unit of measurement is 0.01

Absolute error = $^{1}/_{2} \times 0.01 = 0.005$

Percentage error = $\frac{0.005}{0.20} \times 100\% = 2.5\ \%$

The smallest unit of measurement is 0.1

Absolute error = $^{1}/_{2} \times 0.1 = 0.05$ cm

Percentage error = $^{0.05}/_{0.2} \times 100\% = 25\ \%$

Rounding Off Error

An error found when a number is rounded off to the desired number of decimal places or significant figures, for example when a recurring decimal 1.6 is rounded to the 2 significant figures, it becames 1.7 the rounded off error is;

$1.7 - 1.6 = {}^{17}/_{10} - {}^{5}/_{3} = {}^{1}/_{30}$

Note;

1.6 which is a recurring decimal converted to a fraction is $^{5}/_{3}$

Truncating Error

The error introduced due to truncating is called a truncation error.in the case of 1.6 truncated to 2 S.F., the truncated error is; $|1.6 - 1.6| = |1{}^{6}/_{10} - 1{}^{2}/_{3}| = {}^{1}/_{15}$

Propagation of Errors

Addition and subtraction

What is the error in the sum of 4.5 cm and 6.1 cm, if each represent a measure measurement.

Solution

The limits within which the measurements lie are 4.45, i.e. ., 4.55 or 4.5 ± 0.005 and 6.05 to 6.1 5, i.e. 6.1 ±0.05.

The maximum possible sum is 4.55 + 6.15 =10.7cm

The minimum possible sum is 4.45 + 6.05 =10.5 cm

The working sum is 4.5 + 6.1 = 10.6

The absolute error = maximum sum – working sum

$=|10.7 - 10.6|$

$=0.10$

Example

What is the error in the difference between the measurements 0.72 g and 0.31 g?

Solution

The measurement lie within 0.72 ± 0.005 and 0.31 ± 0.005 respectively

The maximum possible difference will be obtained if we substract the minimum value of the second measurement from the maximum value of the first, i.e ;

0.725 – 0.305 cm

The minimum possible difference is 0.71 5 – 0.31 5 = 0.400.the working difference is 0.72 – 0.31 =0.41, which has an absolute error of |0.420 -0.41 | or |0.400 – 0.41 | = 0.1 0.

Since our working difference is 0.41, we give the absolute error as 0.01 (to 2 s.f)

Note:

In both addition and subtraction, the absolute error in the answer is equal to the sum of the absolute errors in the original measurements.

Multiplication

Example

A rectangular card measures 5.3 cm by 2.5 cm. find

45. The absolute error in the rea of the card
46. The relative error in the area of the cord

Solution

47. The length lies within the limits 5.3 ± 0.05 cm
48. The length lies within the limits 2.5 ± 0.05 cm

The maximum possible area is 2.55 x 5.35 =13.6425 cm^2
The minimum possible area is 2.45 x 5.25 =12.8625 cm^2
The working area is 5.3 x 2.5 = 13.25 cm^2
Maximum area – working area = 13.6425 – 13.25 = 0.3925.
Working area – minimum area = 13.25 – 12.8625 = 0.3875
We take the absolute error as the average of the two.

Thus, absolute error = $\frac{0.3925 + 0.3875}{2}$ = 0.3900

The same can also be found by taking half the interval between the maximum area and the minimum area $^1/_2$(13.6425-12.8625) = 0.39
The relative error in the area is :

$\frac{0.39}{13.25}$ = 0.039 (to 2 S.F)

Division

Given 8.6 cm ÷ 3.4 cm.Find:

30. The absolute error in the quotient
31. The relative error in the quotient

Solution

(xi) 8.6 cm has limits 8.55 cm and 8.65 cm. 3.4 has limits 3.35 cm and 3.45 cm.

The maximum possible quotient will be given by the maximum possible value of the numerator and the smallest possible value of the denominator, i.e.,

$\frac{8.65}{3.35}$ = 2.58 (to 3 s.f)

The minimum possible quotient will be given by the minimum possible value of the numerator and the biggest possible value of the denominator, i.e.

$\frac{8.65}{3.45}$ = 2.48 (to 3 s.f)

The working quotient is;

$\frac{8.6}{3.4}$= 2.53 (to 3 .f.)

The absolute error in the quotient is;

$\frac{2.53 \times 2.48}{2} = {}^{1}/_{2} \times 0.10$

0.050 (to 2 s.f)

(xii) Relative error in the working quotient ;

$\frac{0.05}{2.53} = \frac{5}{253}$

12. 0.01 97

13. 0.020 (to 2 s.f)

Alternatively

Relative error in the numerator is $\frac{0.05}{8.6}$ = 0.00581

Relative error in the denominator is $\frac{0.05}{3.4}$ = 0.0147

Sum of the relative errors in the numerator and denominator is

0.00581 + 0.01 47 = 0.02051 s

=0.021 to 2 S.F

Questions

1.

a. Work out the exact value of R = $\frac{1}{0.003146 - 0.003130}$

An approximate value of R may be obtained by first correcting each of the decimal in the denominator to 5 decimal places

The approximate value

The error introduced by the approximation

70. The radius of circle is given as 2.8 cm to 2 significant figures

If C is the circumference of the circle, determine the limits between which C/π lies

By taking Π to be 3.142, find, to 4 significant figures the line between which the circumference lies.

71. The length and breadth of a rectangular floor were measured and found to be 4.1 m and 2.2 m respectively. If possible error of 0.01 m was made in each of the measurements, find the:

Maximum and minimum possible area of the floor

Maximum possible wastage in carpet ordered to cover the whole floor

72. In this question Mathematical Tables should not be used

The base and perpendicular height of a triangle measured to the nearest centimeter are 6 cm and 4 cm respectively.

Find

The absolute error in calculating the area of the triangle

The percentage error in the area, giving the answer to 1 decimal place

12. By correcting each number to one significant figure, approximate the value of 788 x 0.006. Hence calculate the percentage error arising from this approximation.
13. A rectangular block has a square base whose side is exactly 8 cm. Its height measured to the nearest millimeter is 3.1 cm

    Find in cubic centimeters, the greatest possible error in calculating its volume.
14. Find the limits within the area of a parallegram whose base is 8cm and height is 5 cm lies. Hence find the relative error in the area
15. Find the minimum possible perimeter of a regular pentagon whose side is 1 5.0cm.
16. Given the number 0.237

    Round off to two significant figures and find the round off error

    Truncate to two significant figures and find the truncation error

16. The measurements a = 6.3, b= 1 5.8, c= 1 4.2 and d= 0.001 73 have maximum possible errors of 1%, 2%, 3% and 4% respectively. Find the maximum possible percentage error in ad/bc correct to 1 sf.

Commonly Used Terms in Coordinates and Graphs

Terms used in coordinates and graphs

- The position of a point in a plan is located using an ordered pair of numbers called **coordinates** and is written in the form **(x, y)**.
- The first number represents distance along the x-axis and is called **x coordinates**.
- The second number represents distance along the y-axis and is called the **y coordinates**.
- The x and y axes intersect at the point (0, 0), called **the origin**.
- The coordinate graph is divided into four quarters called **quadrants**. These quadrants are labeled in the **Figure below;**

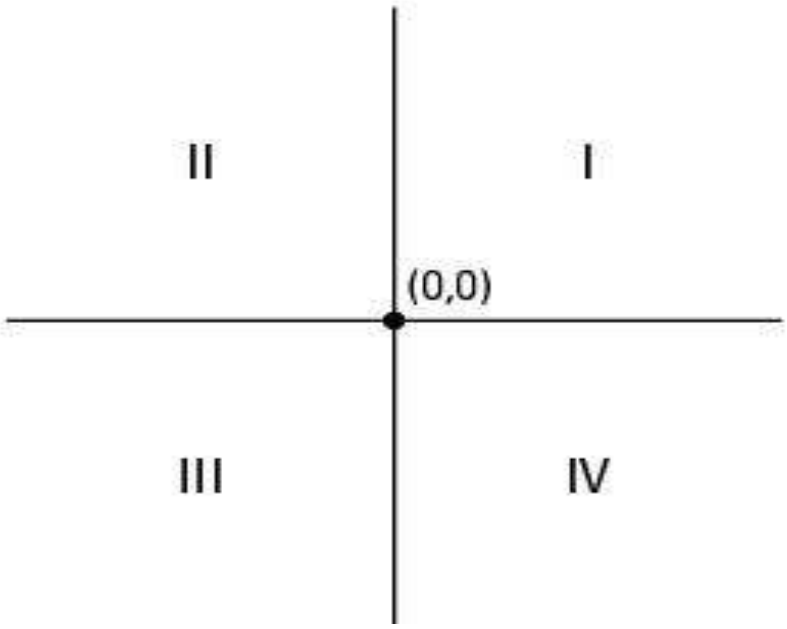

Notice the following:

- In quadrant I, x is always positive and y is always positive.
- In quadrant II, x is always negative and y is always positive.
- In quadrant III, x and y are both always negative.
- In quadrant IV, x is always positive and y is always negative

EXCERCISE

(1). What is meant by the term coordinates?

(2). What is the meaning of the following terms?

a. y coordinates

b. x coordinates

40. y-axes

41. x-axes

(3). Explain why in the I quadrant, **x** and **y** are always positive

(4). In the iv quadrant, why is **x** positive and **y** negative?

(5). What is meant by the term **the origin?**

(6). Explain why in the iii quadrant, both **x** and **y** are negative

(7). What is the meaning of intersection?

How to Find Coordinates of Points on a Cartesian Plane

Coordinates of points on a cartesian plane

- The position of a point in a plane is located using an ordered pair of numbers called **coordinates** and is written in the form **(x, y)**.
- Each point in the plane is identified by its x-coordinate, or horizontal displacement from the origin, and its y-coordinate, or vertical displacement from the origin. Together we write them as an ordered pair indicating the combined distance from the origin in the form (x, y). An ordered pair is also known as a coordinate pair because it consists of x and y-coordinates.

Example;

The position of the point P is (3, 2). the position of the points Q, R, S, U and V.

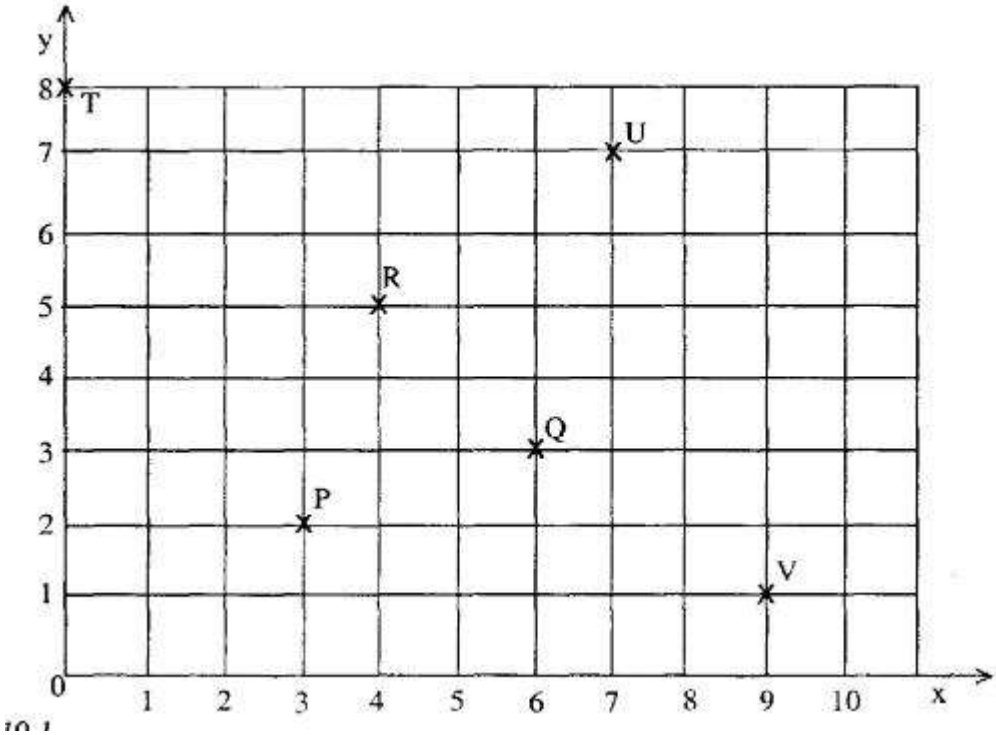

Q (6, 3) R (4, 5) U(7, 7) and V(9, 1) T(0, 8)

EXCERISE

(1). What are the coordinates of point A

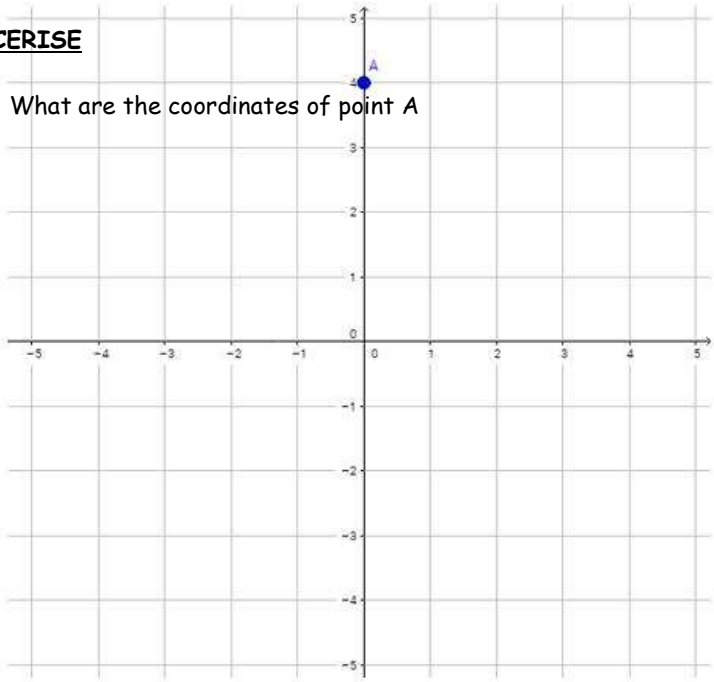

(2). Which of the points has coordinates (-2, 4)?

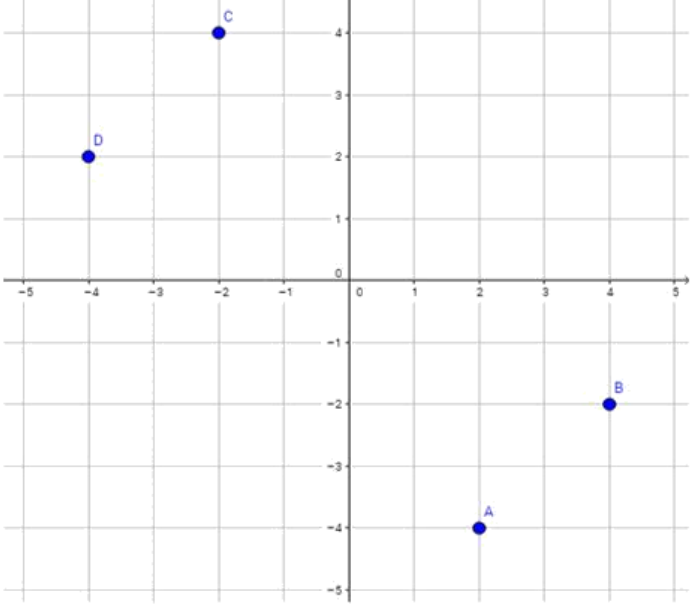

(3). The coordinates of which points are entered correctly?

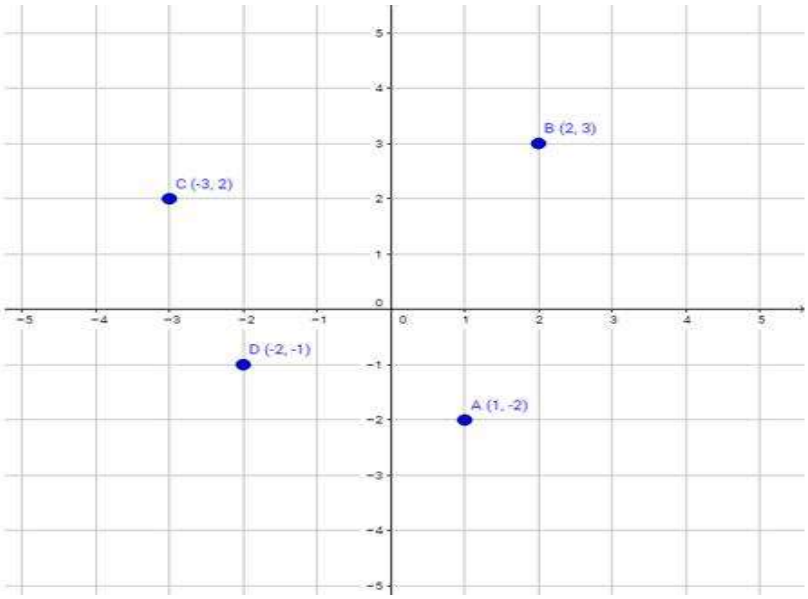

(4). State the coordinates of points A, B, C and D on the Cartesian plane below.

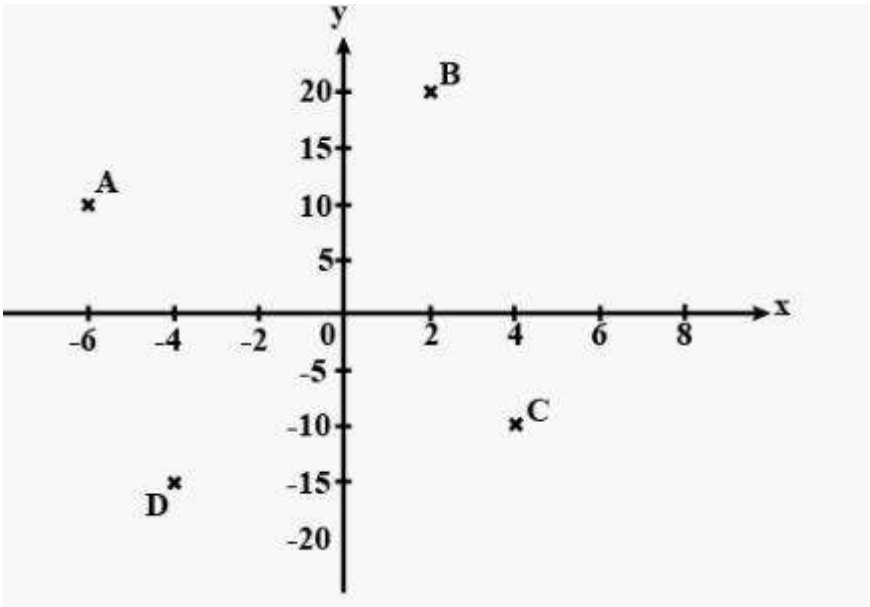

(5). Write the coordinates of points A, B, C, D, E and F on the Cartesian plane.

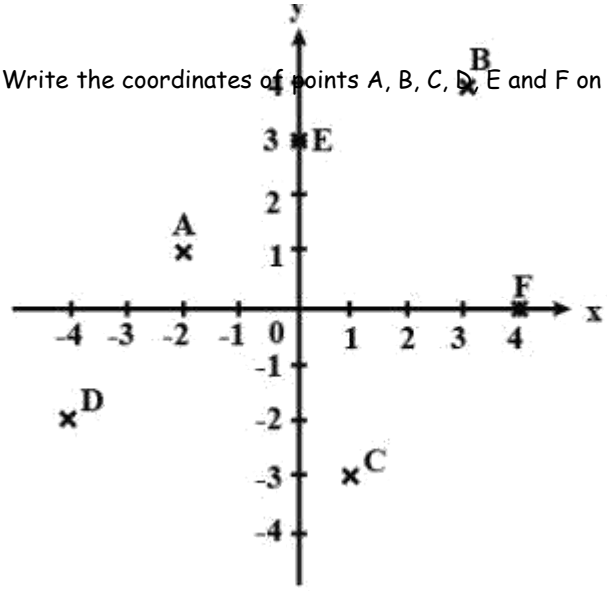

(6). ABCD is a square on the cartesian plane with A, B, and C having coordinates (2, 2), (3, 2), and (3, 1) respectively. Find the coordinates of D.

(7). The diagram is drawn on a Cartesian plane. The x- coordinate of point R is -10. Which of the points A, B, C and D is likely to be R?

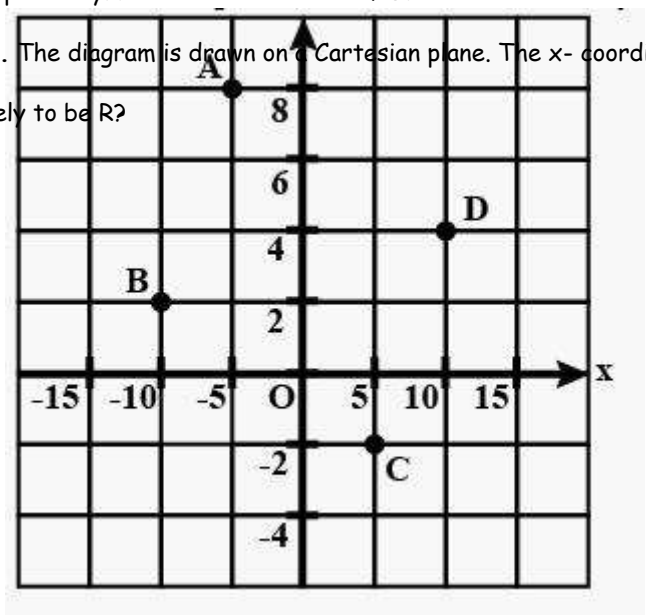

(8). The diagram shows a Cartesian plane. Then y-coordinate of point D is?

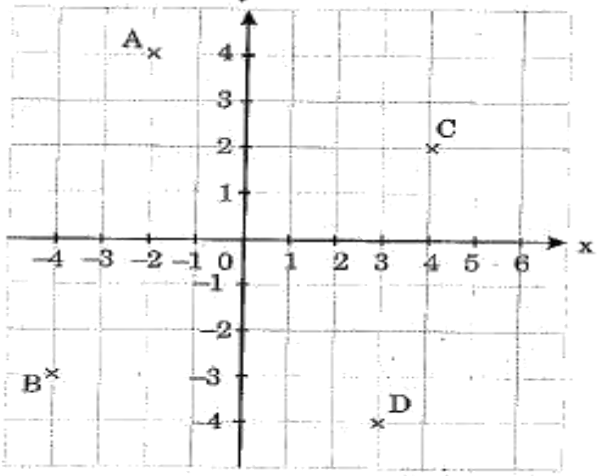

(9). Write down the coordinates of points, *A*, *B*, and *C* seen below.

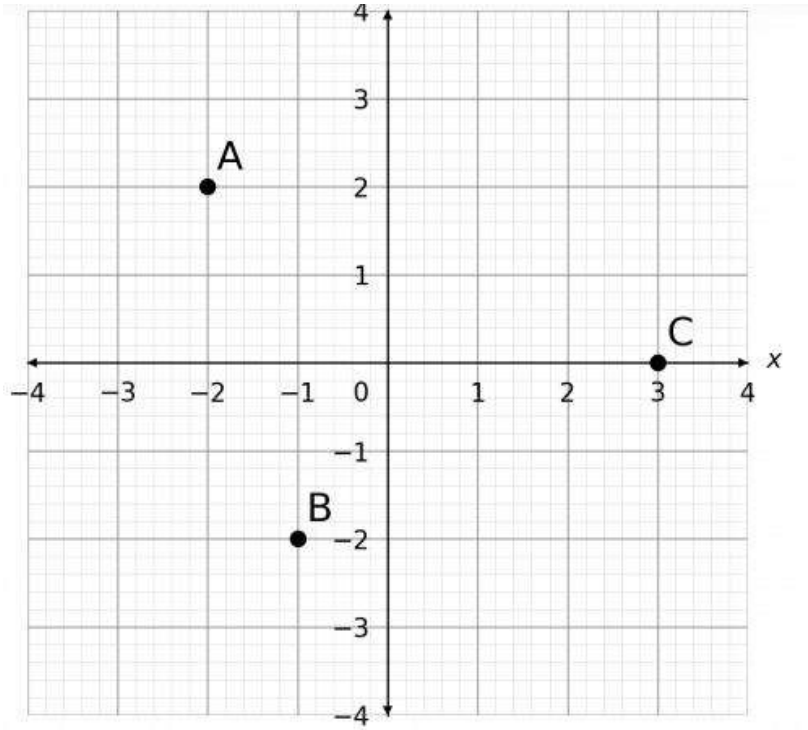

(10). What are the coordinates of points *A*, B and *C*.

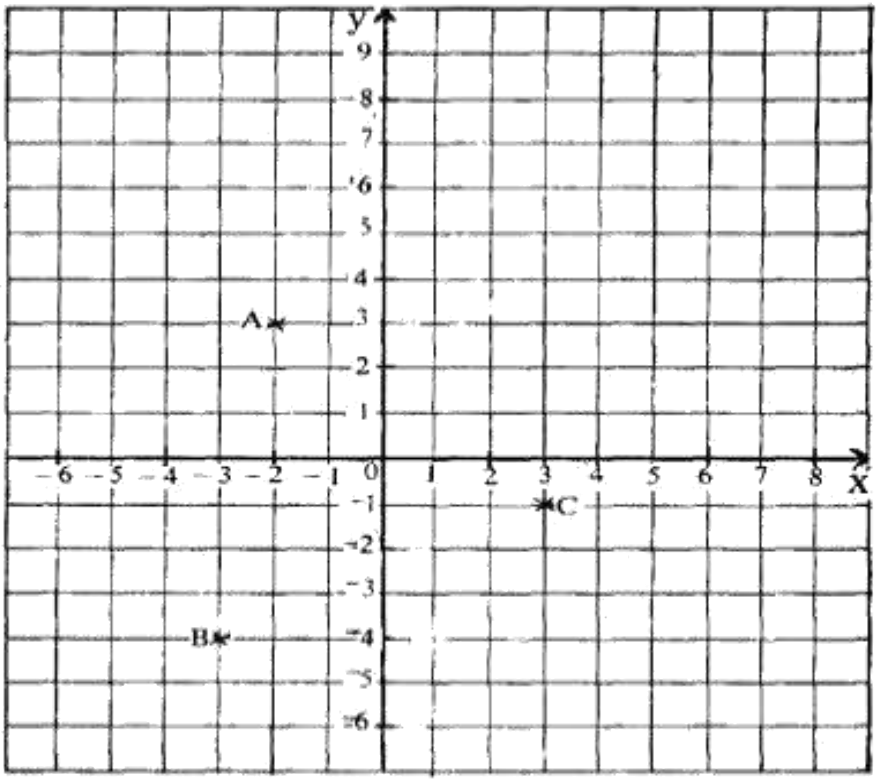

How to Plot Points on a Cartesian Plane Given Coordinates

Plotting points on a cartesian plane given the coordinates

- Coordinates are the numbers in a point's name. For instance, the point (−3, 4) has an x-coordinate −3 and y-coordinate 4. The x-coordinate is the first coordinate; the y-coordinate is the second coordinate.

The two important rules to plot a point in the Cartesian plane are given below:

18. The first coordinate in the ordered pair (x) represents the left/right movement of a point from the origin.
19. The second coordinate in the ordered pair (y) represents the up/down movement of the point from the origin.

Example;

Plot the following points on a cartesian plane given the coordinates A(– 2, 3), B(–3, – 4) and C(3, – 1).

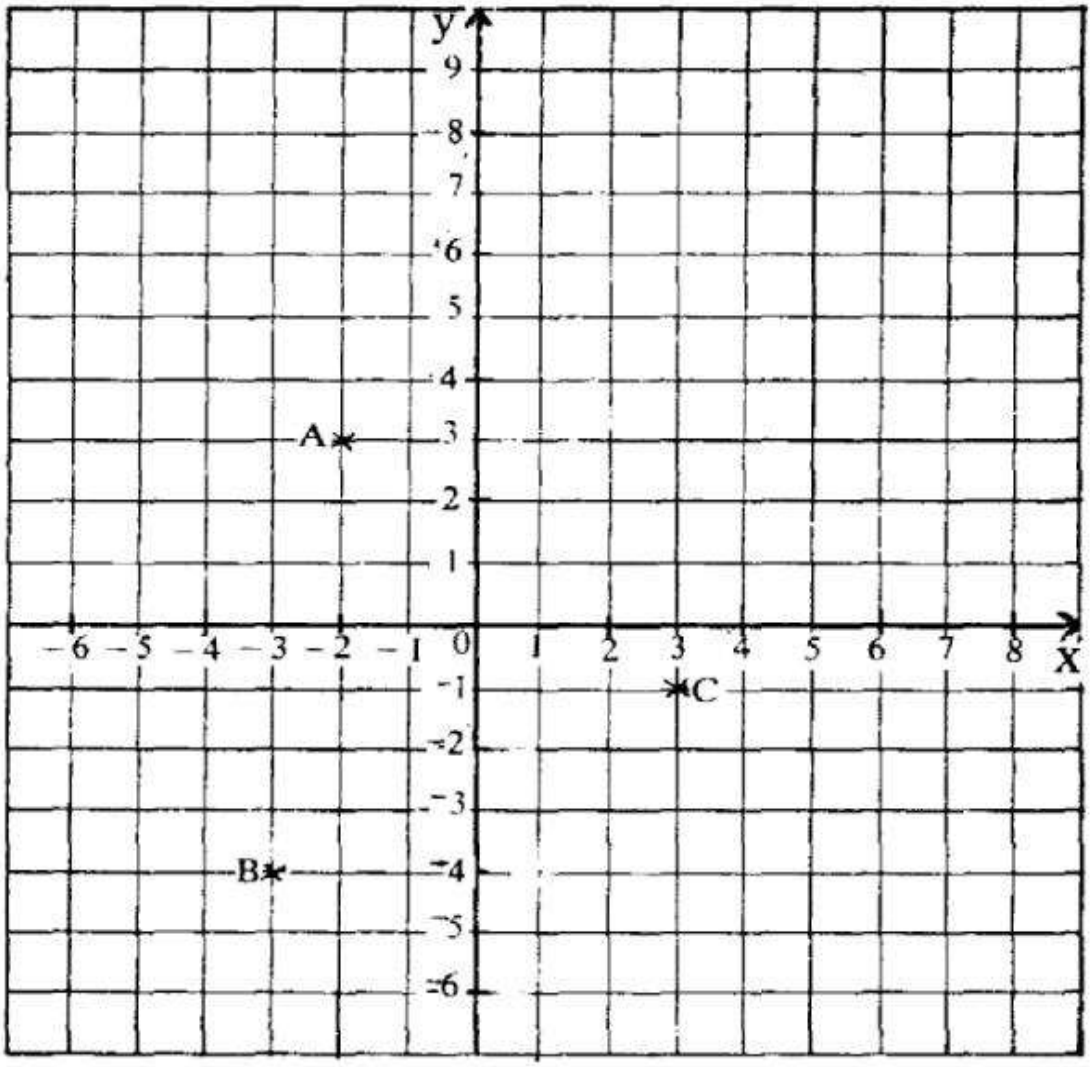

EXERCISE

(1). Plot the coordinates (3, 5) and (5, –4) in the cartesian coordinate system

(2). Plot the following points in the cartesian plane (Use the scale: x-axis = 1 cm and y-axis = 1 cm)

x	-3	0	-1	4	2
y	7	-3.5	-3	4	-3

(3). Plot the following on a Cartesian coordinate plane:

a. (1, 2)

b. (–3, 4)

c. (2, –1)

(4). Plot the point (4, 2) and identify which quadrant or axis it is located.

(5). Draw a pair of axes on a squared paper and plot the following points: L (4, 2), M (–4, –2), N (2.72, 3.25)

(6). Plot the points of a triangle with vertices A(4,–1), B(4,–4), and C(–3,–4).

(7). Plot the following points on the graph and name the quadrant in which each point lies:

a. A (–7, –8)

b. B (–8, 7)

c. C (–5, 0)

d. D (1, 5)

(8). Plot the points (3, 4), (–3,–3), (–7, 6), and (0, –6) on the Cartesian plane and give their positions in quadrants/axes.

(9). In which quadrant or on which axis do each of the points (–2, 4), (3, –1), (–1, 0), (1, 2), and (–3, –5) lie? Verify

your answer by locating them on the Cartesian plane.

(10). Plot the point (2, 3) on a cartesian plane.

Graphs of Straight Lines (y= h and x = k)

Graphs of straight lines(y =h and x =k)

- To **plot straight line graphs** we need to substitute values for x into the equation for the graph and work out the corresponding values for y.
- We often put these values in a table to make our work clearer. Once we have calculated the coordinates, we can plot these as a graph.

Example;

Y = 4

A horizontal line crossing y-axis at 4

X=-4

A vertical line crossing x-axis at -4

EXCERCISE

(1). Plot a graph of **y = -6**

(2). Using a suitable scale, come up with a graph of **x = +2**

(3). Draw a straight line graph **y = + 10**

(4). For each of the following pair of lines, draw their graphs

a. y = 5

b. y+3 = 0

(5).

a. y - 6 = 0

b. y = 3+0

(6). By choosing any two suitable points, draw a graph of **x = 0**

(7). Draw a graph of **y – 4 = 0** using any two points

(8). Plot a graph of **y = +4** .

(9). Using -3 to 3 as the point, plot a graph of **y = +3**

(10). Draw the graph of the line **y-3 = 7**

Graphs of Straight Lines (y= mx +c)

<u>Graphs of straight lines(y =h and x =k)</u>

- To **plot straight line graphs** we need to substitute values for x into the equation for the graph and work out the corresponding values for y.
- We often put these values in a table to make our work clearer. Once we have calculated the coordinates, we can plot these as a graph.

Example;

Y = 4

A horizontal line crossing y-axis at 4

X=-4

A vertical line crossing x-axis at -4

<u>EXCERCISE</u>

(1). Plot a graph of **y = -6**

(2). Using a suitable scale, come up with a graph of **x = +2**

(3). Draw a straight line graph **y =+ 10**

(4). For each of the following pair of lines, draw their graphs

a. y = 5

b. y + 3 = 0

(5).

a. y - 6 = 0

b. y = 3 + 0

(6). By choosing any two suitable points, draw a graph of **x = 0**

(7). Draw a graph of **y – 4 = 0** using any two points

(8). Plot a graph of **y = +4** .

(9). Using -3 to 3 as the point, plot a graph of **y = +3**

(10). Draw the graph of the line **y - 3 = 7**

Graphical Solution of Simultaneous Equations

Graphical solution of simultaneous equations

- So far we have seen that equations of the form ax + by = c represents a straight line. When two such linear equations are graphically represented, their graphs may or may not intersect. The coordinates of the point of intersection represent the solution to the linear simultaneous equations.

Example;

In solving the simultaneous equations x + 3y = 5 and 5x + 7y = 9 graphically, the graph of two equations are drawn as

shown below;

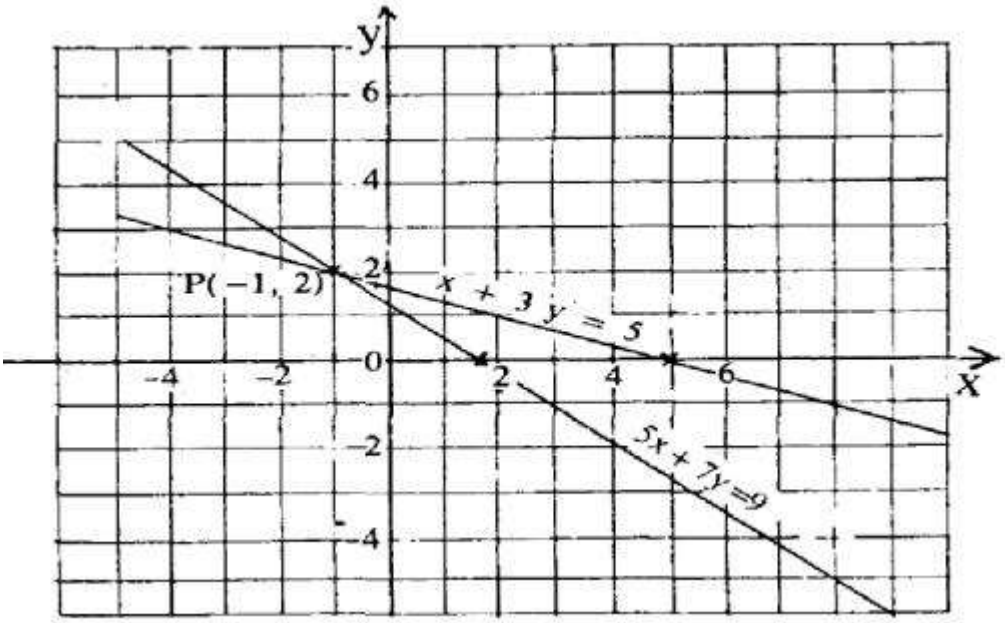

The two lines intersect at P (-1, 2). The solution to the simultaneous equations is, therefore, x = -1 and y = 2

EXCERCISE

Solve each of the following pairs of simultaneous equations graphically;

(1).

a. $y = 3x - 1$

b. $2y + 2x = 3$

(2).

a. $2x - y = 3$

b. $7x - 2y = 16$

(3).

a. $2x - y = 3$

b. $x + 2y = 14$

(4).

a. $5x + y = 7$

b. $3x + 2y = 0$

(5).

a. $y = 2x + x + 7 = 0$

b. $y = 2x - 1$

(6).

a. $3y - x - 4 = 0$

b. $2x - 5y + 7 = 0$

Using graphical method, solve the following:

(7).

a. $3x + 4y = 3.5$

b. $7x - 6y = 0.2$

(8).

a. $2y + 3x + 7 = 0$

b. $3y - x + 2 = 0$

(9).

a. $4x - y = 2$

b. $6x + 4y = 25$

(10).

a. $4x - 2y = 4$

b. $2x - 3y = 0$

General Graphs

General graphs

- Graphs find a wide application in science and many other fields. It is therefore important to master the techniques of drawing graphs that convey information easily and accurately. Of these techniques, one of the most important is the choice of appropriate scales.

We illustrate this by considering the following situations:

(i). A man walks for four hours at an average speed of 5km/h. table (a) below shows the distance covered at a given times.

(ii). A motorist drives for four hours at an average speed of 80km/h. table (b) illustrates the situation.

(a)

Time in hours (t)	1	2	3	4
Distance in km (S)	5	10	15	20

(b)

Time in hours (t)	1	2	3	4
Distance in km (S)	80	160	240	320

The corresponding graph for table(a)is drawn below

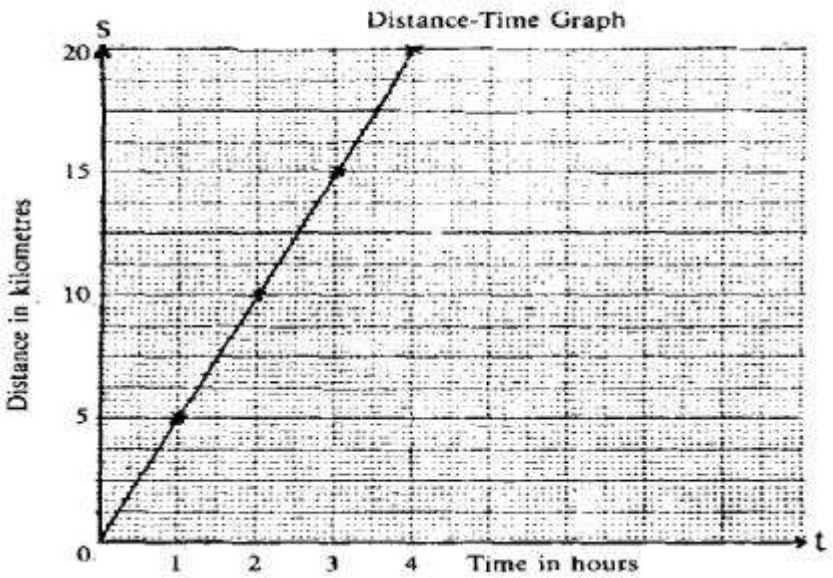

Similarly, the corresponding graph for table(b) is shown below

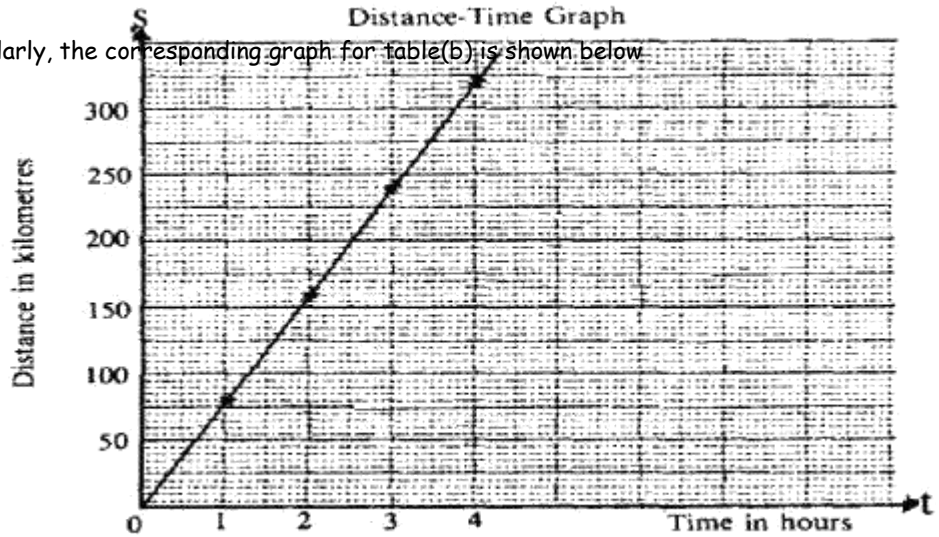

- In both graphs, the scale on the horizontal axes are the same.
- A good scale is one which uses most of the graph page and enable us to plot points and read off values easily and accurately. Avoid scales which:

(i). Give tiny graphs

(ii). Cannot accommodate all the data in the table

It also good practice to:

(i). Label the axes clearly

(ii). Give the title of the graph.

<u>EXCERCISE</u>

(1). A certain quality of gas is heated from 0°C and the volume measured at different temperatures. The table below gives the corresponding values:

Temperature (°C)	20	40	60	80	100
Volume (litres)	1.82	1.95	2.07	2.20	2.32

a. Draw a graph of volume against temperature using a suitable scale

b. Use your graph to find:

(i). The initial volume of gas

(ii). The volume of the gas when the temperature is 50°C and 64°C.

(iii) The temperature of the gas when the volume is 2.3 and 2litres.

(2). A man deposited a certain amount of money in a bank. The following table shows the amount of money due to

him at the end of every year.

Time (years)	1	2	3	4	5
Amount (shillings)	45 000	50 000	55 000	60 000	65 000

a. Using a suitable scale, plot the graph of the amount of money in the bank against time

b. From your graph, estimate his initial deposit in the bank

c. Supposing at the end of $3\frac{1}{2}$ years he withdrew some amount of money such that the balance was sh. 40,000, how much did he withdraw?

d. If he had not withdrawn the money, what would be the amount in the bank after 66 months?

(3). If y = x2, make a table of values of y against values of x from x = -4 to x = 4. Draw a curve passing through the point. from the graph find:

33. (3.1)2

34. (2.9)2

(4). The surface area of an animal may be obtained from the mass of the animal. The following table gives the corresponding values of mass and surface area.

Mass in kg	50	100	150	200	250	300	350	400
Area in m^2	1.4	2.1	2.8	3.4	4.0	4.5	4.9	5.4

Draw the graph of the surface area against mass and use it to answer the following questions:

a. Find the surface area of an animal weighing;

(i). 155kg

(ii). 215kg

(iii). 370kg

b. A butcher A slaughters two animals weighing 155kg and 215kg. Another butcher B slaughters an animal weighing 370kg. which butcher a larger area of hides?

c. What is the mass of an animal whose surface area is one square meter?