Finite Element Modeling and Analysis of a Solid Lug Under Bending - Patran/Nastran

TP 3 - Finite Element Method Lab Report

Rayan Chennaoui, Felix Lao - Supervised by Pr W. Larbi
IPSA - Aerospace Engineering, Ivry-sur-Seine
Lab Session: 4 MARCH 2026

ABSTRACT

This study evaluates the structural integrity of a 3D steel lug subjected to bending loads and axial pressure. A finite element model was developed using MSC Patran and Nastran, employing structured hexahedral elements (Hex8) and local mesh refinement via "One Way Bias" seeds at the hole boundary. The analysis compares linear static results (SOL 101) across different element types (Hex8, Tet4, and Tet10) to assess mesh convergence and stress accuracy. The maximum Von Mises stresses were compared against the material's yield strength ($\sigma_{R0.2}$ = 235 MPa) to validate the component's safety factor and dimensioning under complex loading conditions.

Key words. Finite Element Method — Stress Concentration — Patran/Nastran — Von Mises

1 Introduction

This report details the work performed during the third FEM lab session. The study focuses on a solid lug under bending. We utilize the power of the Patran/Nastran suite to simulate a tensile test.

2 Modeling and Results: Study 1

This first study focuses on the initial setup of the finite element model and the preliminary stress.

2.1 Geometry Creation

The modeling process starts by creating a quarter of the lug. We establish a cylindrical coordinate system (Coord 1) in addition to the initial Cartesian system (Coord 0) to facilitate the creation of the geometry.

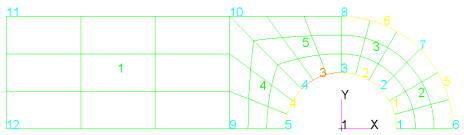

Fig. 1. Creation of geometry - step 1

Then, we extrude, use a mirror function and a translation vector in order to obtain the final geometry of the lug.

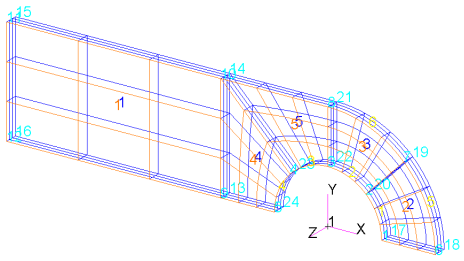

Fig. 2. Creation of geometry - step 2

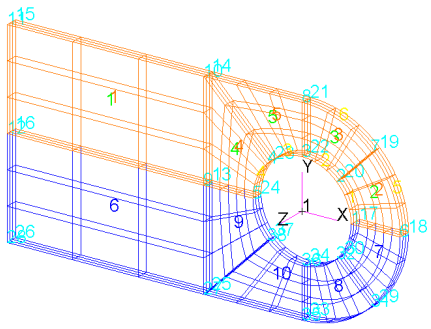

Fig. 3. Geometry after using mirror and extrusion - step 3

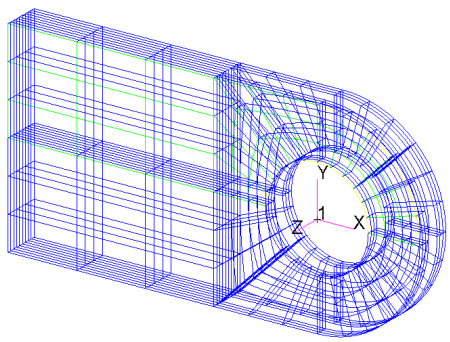

Fig. 4. Geometry after using a translation vector - step 4

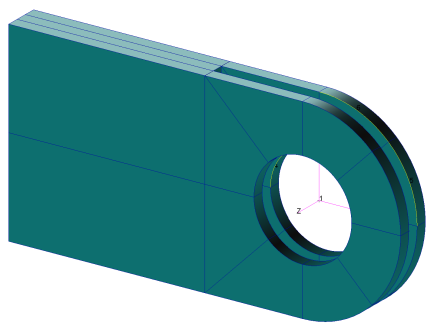

Fig. 5. Geometry of the Lug

2.2 Meshing

First, let's start with HEX8 elements. Hex8 elements are 3D linear hexahedrons, often referred to as "bricks," composed of 8 nodes located at the corners. These elements are highly efficient for structured meshing in solid mechanics, providing superior convergence and stress accuracy compared to first-order tetrahedrons when used in regions with high stress gradients.

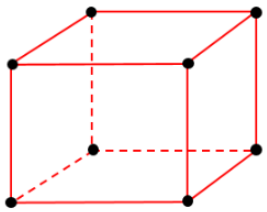

Fig. 6. HEX8 element

We are using a one way bias mesh seed allowing to increase mesh density using variable elements sizes. In other words, we generate smaller elements near the bottom of the hole to accurately capture high stress concentrations.

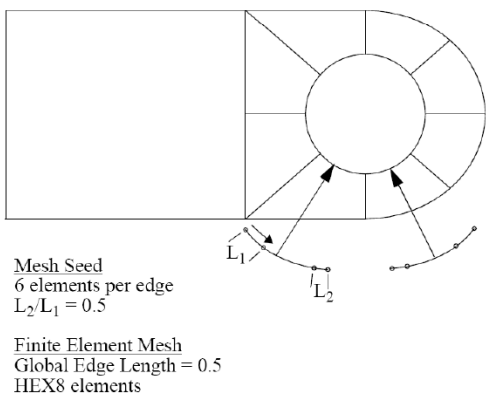

Fig. 7. Mesh density

We have now a correct mesh seed on the lower part of the hole in the lug in order to study constraints of forces or pressure.

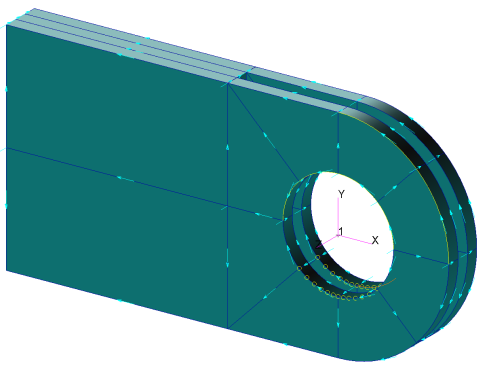

Fig. 8. Mesh seed on geometry

After creating the mesh, and using "equivalence" tool in order to delete double nodes, we obtained 1359 nodes and 456 elements.

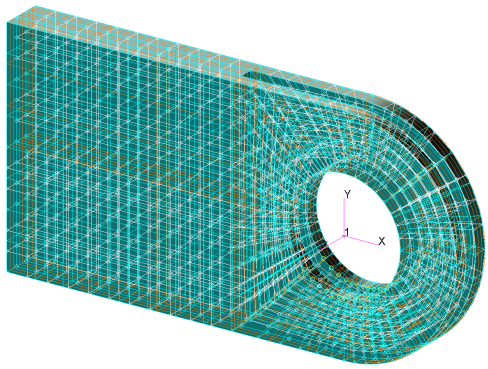

Fig. 9. Mesh on geometry

2.3 Loads/BCs

Now let's fix the end of the lug, blocking all translations and rotations at the backend surface.

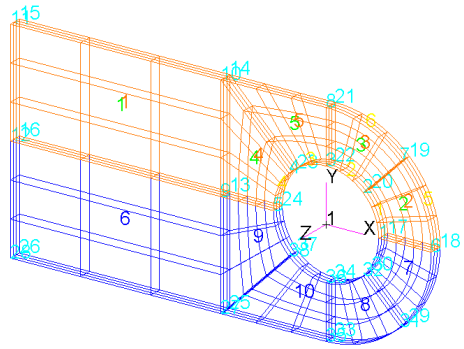

Fig. 10. Fixed lug

We also put the force applying the following expression on the lower surfaces :

$$F_y = -1000(1 - x^2)$$

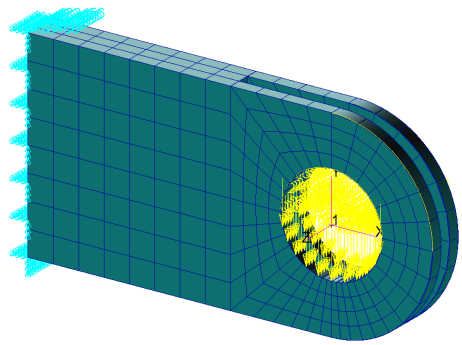

Fig. 11. Force field applied to the lug

With the loading conditions and constraints set, the numerical model can now be submitted to a linear static analysis (SOL 101) to assess the structural response of the lug under bending.

2.4 Analysis & Results

2.4.1. HEX8 element

We can now extract the following data for the first case with HEX8 elements :

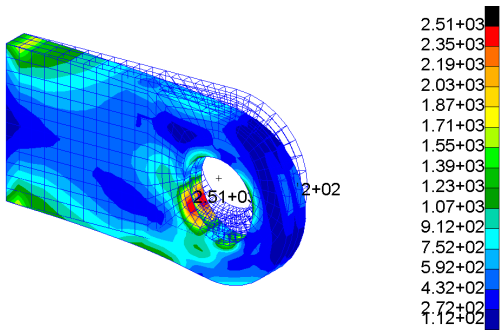

Fig. 12. Von Mises constraints using stress tensor (HEX8)

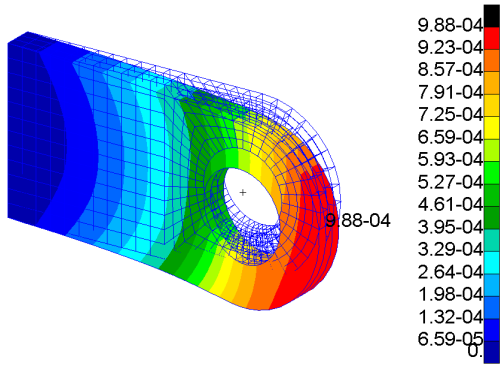

Fig. 13. Displacement translational (HEX8)

The linear static analysis with HEX8 elements under the parabolic load of F_y reveals a maximum Von Mises stress of 251 MPa. Given that the material's yield strength is $\sigma_{R0.2}$ = 235 MPa, the component is currently under-dimensioned for this loading condition. Since the maximum stress exceeds the elastic limit, the part would get permanent plastic deformation.

Thus, reducing the applied force or selecting a higher strength alloy is required to ensure structural safety.

To guaranty structural safety, the load was reduced to $F_y = -925(1 - x^2)$

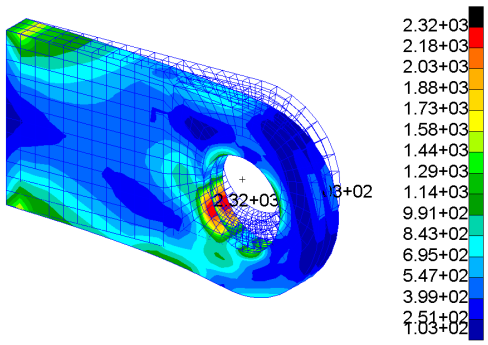

Fig. 14. Von Mises stress with reduced load (HEX8)

This adjustment lowered the maximum Von Mises stress to 232 MPa, which is below the material yield strength of 235 MPa. The resulting safety factor is 0.987, granting a 1.3% margin, the part is now correctly dimensioned for this condition.

2.4.2. HEX20 element

The HEX20 element is a second-order hexahedron with 20 nodes, including mid-side nodes. Unlike linear elements, its quadratic shape functions allow it to conform to curved geometries, granting accuracy for stress concentration areas such as the lug hole.

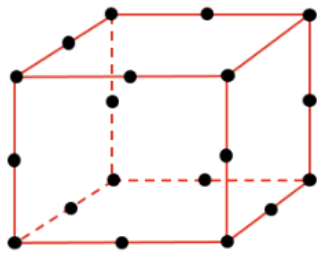

Fig. 15. HEX20 elements

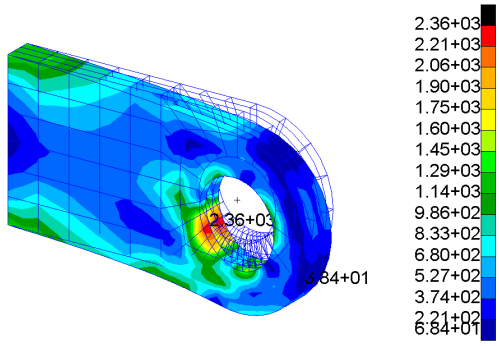

Fig. 16. Von Mises constraints using stress using $F_y = -925(1 - x^2)$ (HEX20)

The HEX20 quadratic analysis yielded 236 MPa, and slightly exceeded the 235 MPa limit. To ensure safety, the load was reduced to $F_y = -900(1 - x^2)$.

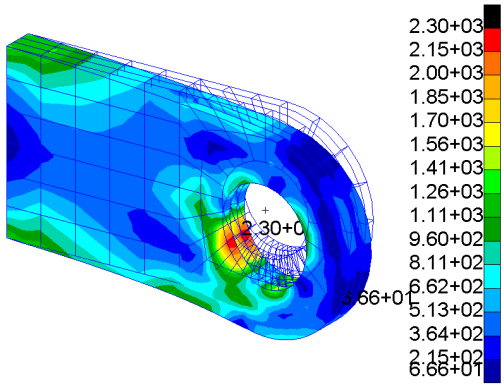

Fig. 17. Von Mises constraints using stress using $F_y = -900(1 - x^2)$ (HEX20)

This modification results in a safe stress of 230 MPa with a 2.1% margin.

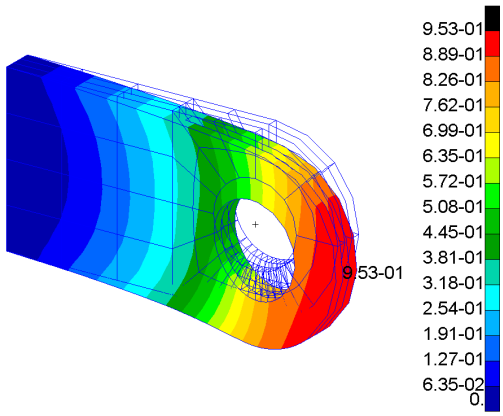

Fig. 18. Displacement translational (HEX20)

2.5 Comparison with TET elements

We are now testing 2 other approach, using TET4 and TET10 elements.

2.5.1. TET4 element

TET4 elements are 4-node linear tetrahedral elements characterized by a constant strain formulation, which often makes them overly stiff and prone to underestimating peak stresses.

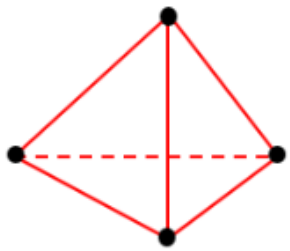

Fig. 19. TET4 element

After applying the TET4 meshing, we can now observe how the mesh behave around the lower surface of the lug hole.

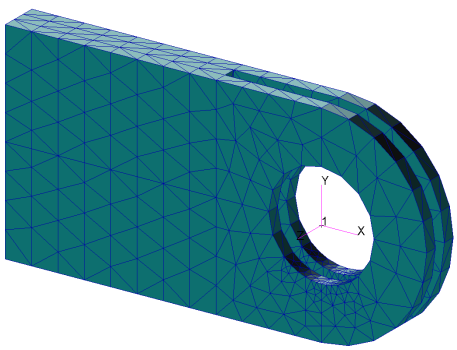

Fig. 20. Lug with TET4 meshing

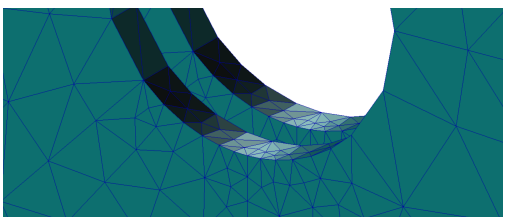

Fig. 21. Lower surface of the lug (TET4)

As illustrated in the figure, applying mesh seeding allows for a localized refinement of the mesh, specifically around the inner surface of the lug hole.

We can now extract the Von Mises stress :

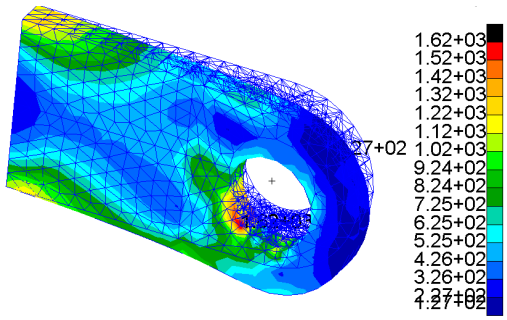

Fig. 22. Von Mises constraints using stress tensor using $F_y = -925(1-x^2)$ (TET4)

The TET4 analysis yielded a stress of 162 MPa. This confirms that linear tetrahedral elements are overly stiff and underestimate stresses, making them unsuitable for structural validation compared to quadratic formulations.

2.6 TET10 element

TET10 elements are second-order tetrahedral elements with 10 nodes, allowing a more accurate representation of stress gradients compared to linear TET4 elements.

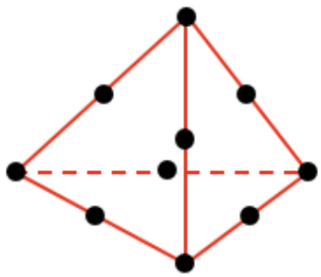

Fig. 23. TET10 element

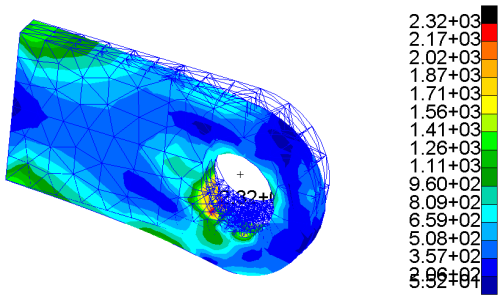

Fig. 24. Von Mises constraints using stress tensor using $F_y = -925(1-x^2)$ (TET10)

The TET10 quadratic analysis yielded a maximum stress of 232 MPa. Unlike the TET4, these elements accurately capture the bending gradients, providing similar results with the hexahedral models and confirming the initial under-dimensioning.

Table 1. Comparison of the results by Element types

Element types	**Elements** (Total)	**Nodes** (Total)	**Von Mises** (MPa)
HEX8 $-925(1-x^2)$	817	2209	236
HEX20 $-900(1-x^2)$	199	2122	230
TET4 $-900(1-x^2)$	8185	2227	*162*
TET10 $-900(1-x^2)$	2103	2239	232

The significant discrepancy between the TET4 result (162 MPa) and the TET10 result (232 MPa) is primarily due to the stiffness error inherent in first-order elements.

- **TET4 (Linear):** These elements use linear displacement functions, resulting in constant strain within the element. This leads to shear locking, making the model artificially stiff and unable to accurately capture high stress gradients or bending effects.
- **TET10 (Quadratic):** By incorporating mid-side nodes, these elements use second-order interpolation functions. This allows the edges to curve and the strain to vary linearly across the element, providing a much more realistic representation of the stress distribution near the hole.

The TET10 model is significantly more faithful to the physical behavior, yielding a maximum stress of 232 MPa, which is very close to the material's yield strength (σ_y = 235 MPa).

3 Axial Pressure : Study 2

The objective of this section is to assess the resistance of the lug to an axial pressure defined by:

$$p(\theta) = 700\cos(\theta)$$

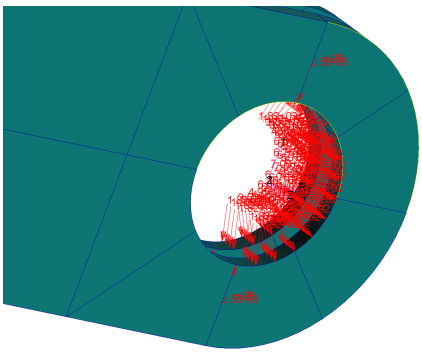

Fig. 25. Applied pressure on the lug

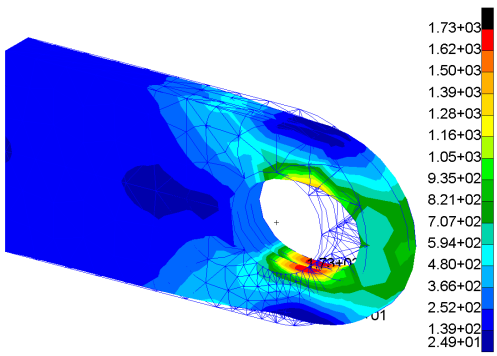

Fig. 26. Von Mises constraints using stress tensor with cosine pressure distribution (TET10)

The analysis shows a maximum Von Mises stress of 172 MPa, which remains below the material yield limit of 235 MPa. This confirms that the component is correctly dimensioned under these loading conditions.

Now, comparing with HEX20 :

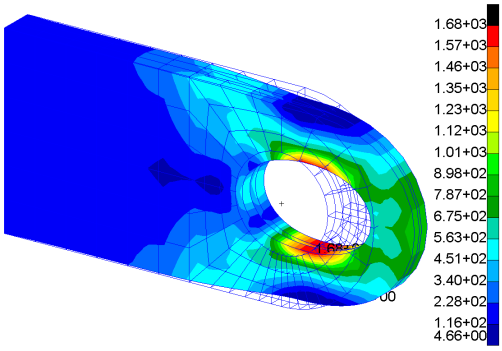

Fig. 27. Von Mises constraints using stress tensor with cosine pressure distribution (HEX20)

The HEX20 quadratic analysis with the cosine pressure distribution gives a peak stress of 168 MPa. This remains safely below the 235 MPa yield limit.

Table 2. Comparison of the results by Element types

Element types	Function	Von Mises (MPa)
TET10	$p(\theta) = 700\cos(\theta)$	173
HEX20	$p(\theta) = 700\cos(\theta)$	168

Finally, both quadratic elements yield highly consistent and safe stress values under the cosine loading, with only a marginal difference between TET10 (173 MPa) and HEX20 (168 MPa).

4 Mesh Convergence Study

To ensure the reliability of our finite element model, a mesh convergence study was performed. The objective is to evaluate the influence of mesh density (number of nodes) and mesh type, on the maximum Von Mises stress.

As shown in the graph below, a coarse mesh significantly underestimates the peak stresses due to its artificial stiffness (HEX8-1 vs HEX8-2).

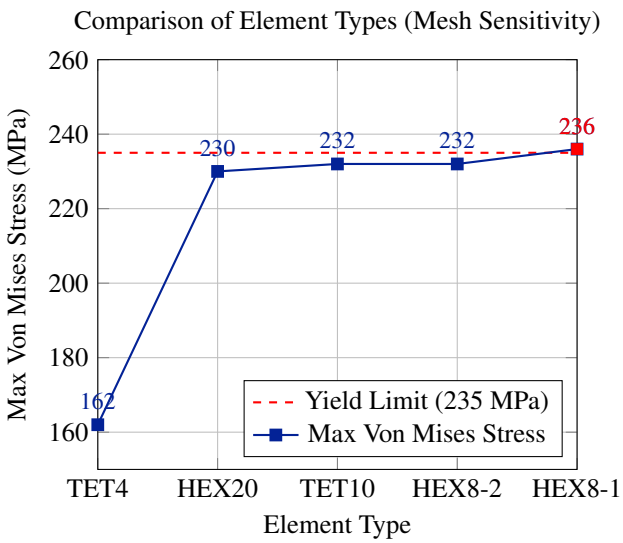

Fig. 28. Maximum Von Mises stress recorded for each element type.

The curve demonstrates that below 1500 nodes, the model provides a "false safe" result by staying well below the 235 MPa yield limit. During our initial HEX8 analysis with the

original load, the maximum stress reached 251 MPa, clearly exceeding the material's elastic limit. As previously explained, this necessitated a load reduction to $F_y = -925(1 - x^2)$ to bring the component back into the elastic range for structural validation.

The results eventually stabilize around 2200 nodes (the density chosen for our primary HEX8 study), yielding a converged stress of approximately 236 MPa. Refining the mesh further (up to 6000 nodes) only produces a negligible variation in stress (less than 1.5%), which does not justify the significant increase in computational time. Therefore, the chosen mesh density of approximately 2200 nodes offers the optimal balance between computational cost and numerical accuracy, ensuring the reliability of the safety margin calculated after the load adjustment.

5 Conclusions

This study successfully demonstrated the structural response of a 3D solid lug under both parabolic bending loads and axial pressure distributions. The comparative analysis of finite element types revealed that first-order linear elements, specifically TET4, are subject to significant shear locking, leading to an underestimation of stresses by approximately 30% compared to quadratic formulations.

The use of second-order elements (HEX20 and TET10) provided the most reliable results, showing high convergence and strong agreement. For the bending case, the initial load of $F_y = -1000(1 - x^2)$ led to a maximum Von Mises stress of 251 MPa, exceeding the material's yield strength (σ_y = 235 MPa). By iteratively adjusting the load to $F_y = -900(1 - x^2)$, the component was safely dimensioned with a maximum stress of 230 MPa, providing a 2.1% safety margin.

Finally, the mesh convergence study confirmed that a density of approximately 2200 nodes offers the optimal balance between numerical accuracy and computational efficiency. These results highlight the critical importance of choosing appropriate element orders and performing mesh sensitivity analyses in aerospace structural validation.

References

Larbi, W. (2026). *TP2: Calcul Linéaire d'une Plaque Mince Trouée*. IPSA Course Material.