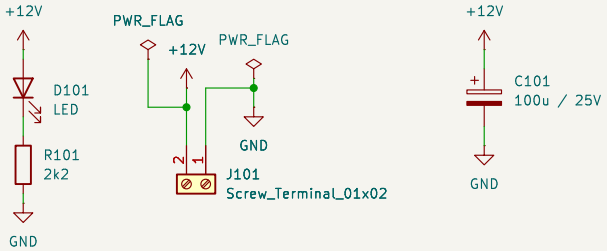

Device Tester Connector

File: device_tester_connector.kicad_sch

Bus Tester Connector

File: bus_tester_connector.kicad_sch

H101
MountingHole

H102
MountingHole

H103
MountingHole

H104
MountingHole

Amateurfunkclub für Remote Stationen

Sheet: /
File: DeviceTester.kicad_sch

Title: Device Tester

Size: A4	Date:	**Rev: BETA-42c10af**
KiCad E.D.A. 9.0.7		Id: 1/3

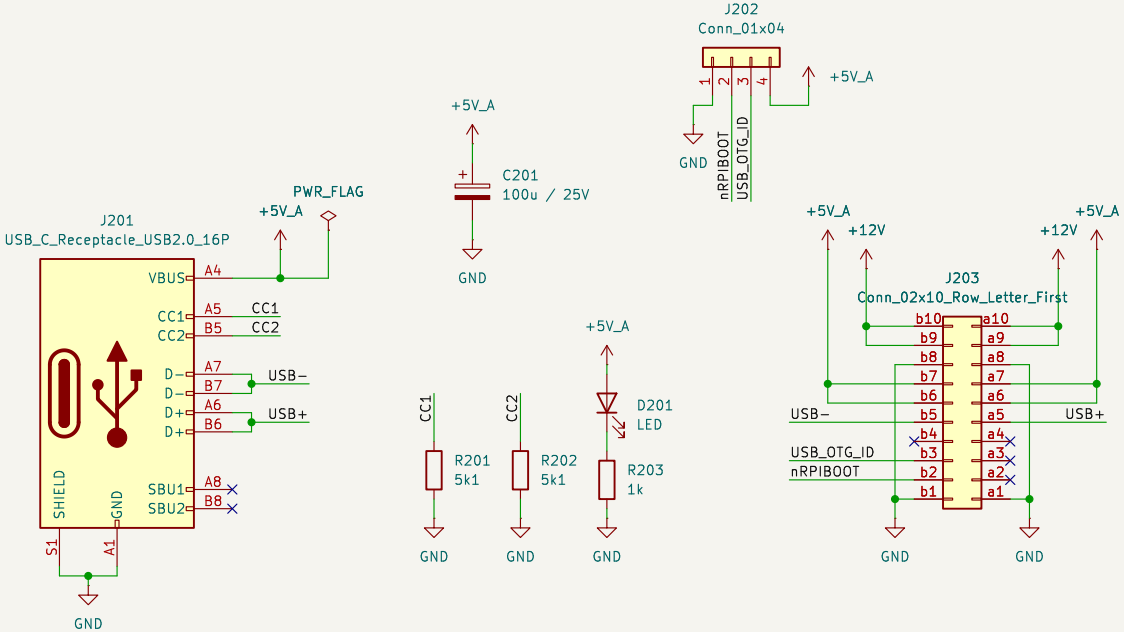

Amateurfunkclub für Remote Stationen

Sheet: /Device Tester Connector/
File: device_tester_connector.kicad_sch

Title: Device Tester Connector

Size: A4	Date:	**Rev: BETA−42c10af**
KiCad E.D.A. 9.0.7		Id: 2/3

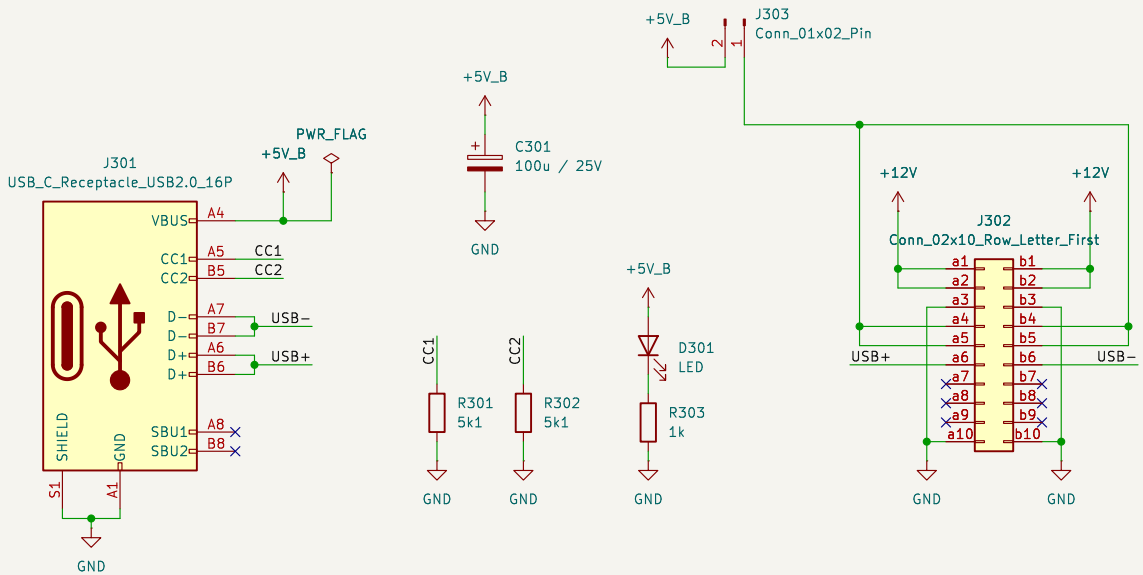

Amateurfunkclub für Remote Stationen

Sheet: /Bus Tester Connector/
File: bus_tester_connector.kicad_sch

Title: Device Tester Connector

Size: A4	Date:	**Rev: BETA−42c10af**
KiCad E.D.A. 9.0.7		Id: 3/3