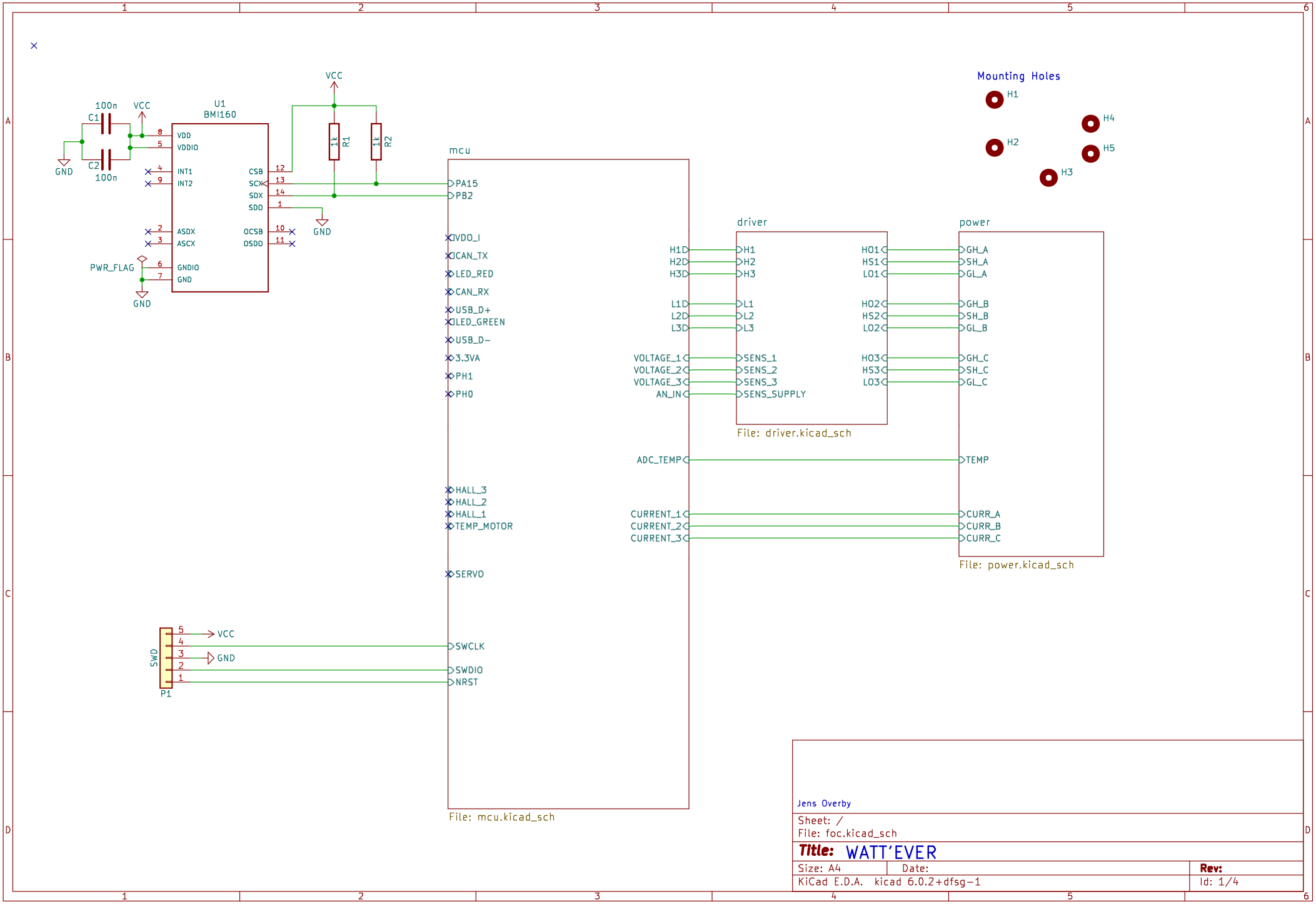
U1
BMI160
VDD
VDDIO
INT1
INT2
CSB
SCX
SDX
SDO
ASDX
ASCX
OCSB
OSDO
GNDIO
GND
C1
C2
100n
VCC
GND
PWR_FLAG
R1
R2
1k
mcu
PA15
PB2
VDDO_I
CAN_TX
LED_RED
CAN_RX
USB_D+
LED_GREEN
USB_D-
3.3VA
PH1
PH0
HALL_3
HALL_2
HALL_1
TEMP_MOTOR
SERVO
SWCLK
SWDIO
NRST
File: mcu.kicad_sch
driver
H1
H2
H3
L1
L2
L3
VOLTAGE_1
VOLTAGE_2
VOLTAGE_3
AN_IN
SENS_1
SENS_2
SENS_3
SENS_SUPPLY
HO1
HS1
LO1
HO2
HS2
LO2
HO3
HS3
LO3
File: driver.kicad_sch
power
GH_A
SH_A
GL_A
GH_B
SH_B
GL_B
GH_C
SH_C
GL_C
ADC_TEMP
TEMP
CURRENT_1
CURRENT_2
CURRENT_3
CURR_A
CURR_B
CURR_C
File: power.kicad_sch
Mounting Holes
H1
H2
H3
H4
H5
SWD
P1
Jens Overby
Sheet: /
File: foc.kicad_sch
Title: WATT'EVER
Size: A4
Date:
Rev:
KiCad E.D.A. kicad 6.0.2+dfsg-1
Id: 1/4

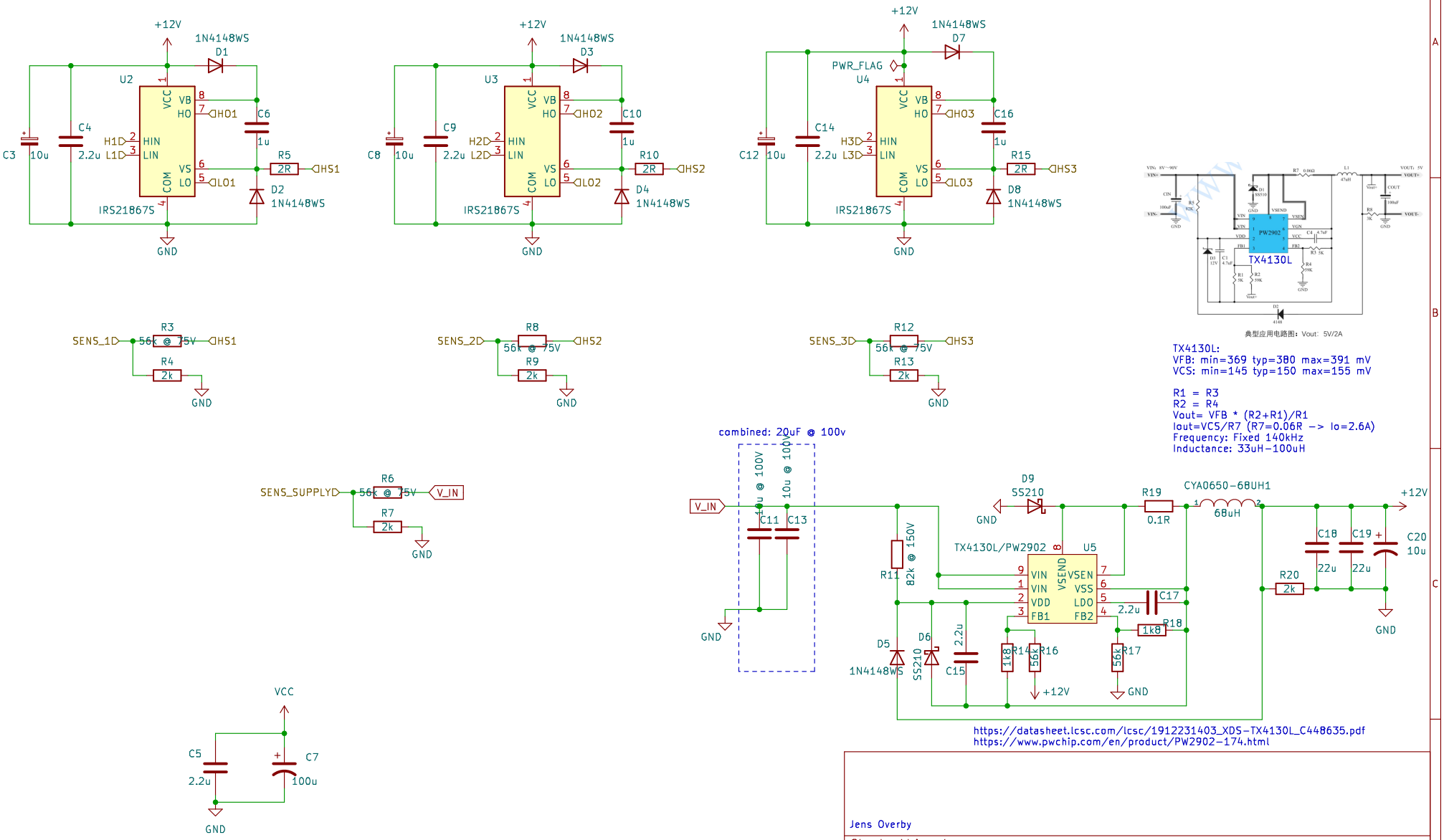
+12V
1N4148WS
D1
U2
VCC
VB
HO
HO1
C6
1u
C4
2.2u
H1
L1
HIN
LIN
VS
LO
LO1
R5
2R
HS1
D2
1N4148WS
C3
10u
IRS21867S
COM
GND
+12V
1N4148WS
D3
U3
C9
2.2u
H2
L2
HO2
C10
1u
R10
2R
HS2
D4
1N4148WS
C8
10u
IRS21867S
GND
+12V
1N4148WS
D7
PWR_FLAG
U4
C14
2.2u
H3
L3
HO3
C16
1u
R15
2R
HS3
D8
1N4148WS
C12
10u
IRS21867S
GND
SENS_1
R3
56k @ 75V
HS1
R4
2k
GND
SENS_2
R8
56k @ 75V
HS2
R9
2k
GND
SENS_3
R12
56k @ 75V
HS3
R13
2k
GND
SENS_SUPPLY
R6
56k @ 75V
V_IN
R7
2k
GND
VCC
C5
2.2u
C7
100u
GND
combined: 20uF @ 100v
V_IN
10u @ 100V
10u @ 100V
C11
C13
GND
R11
82k @ 150V
D5
1N4148WS
D6
SS210
2.2u
C15
D9
SS210
GND
R19
0.1R
CYA0650-68UH1
68uH
+12V
TX4130L/PW2902
U5
VIN
VIN
VDD
FB1
VSEN
VSS
LDO
FB2
C17
2.2u
R18
1k8
R14
1k8
R16
56k
+12V
R17
56k
GND
R20
2k
C18
22u
C19
22u
C20
10u
GND
TX4130L:
VFB: min=369 typ=380 max=391 mV
VCS: min=145 typ=150 max=155 mV
R1 = R3
R2 = R4
Vout= VFB * (R2+R1)/R1
Iout=VCS/R7 (R7=0.06R -> Io=2.6A)
Frequency: Fixed 140kHz
Inductance: 33uH-100uH
https://datasheet.lcsc.com/lcsc/1912231403_XDS-TX4130L_C448635.pdf
https://www.pwchip.com/en/product/PW2902-174.html
Jens Overby
Sheet: /driver/
File: driver.kicad_sch
Title: WATT'EVER
Size: A4
Date:
Rev:
KiCad E.D.A. kicad 6.0.2+dfsg-1
Id: 6/4

External booster drive:
https://www.infineon.com/dgdl/Infineon-External_booster_for_Driver_IC-ApplicationNotes-v01_06-EN.pdf?fileId=5546d46146d18cb40146ffb0461d3894

PNP turn-off circuit:
https://www.youtube.com/watch?v=6pp1jj2oDvo

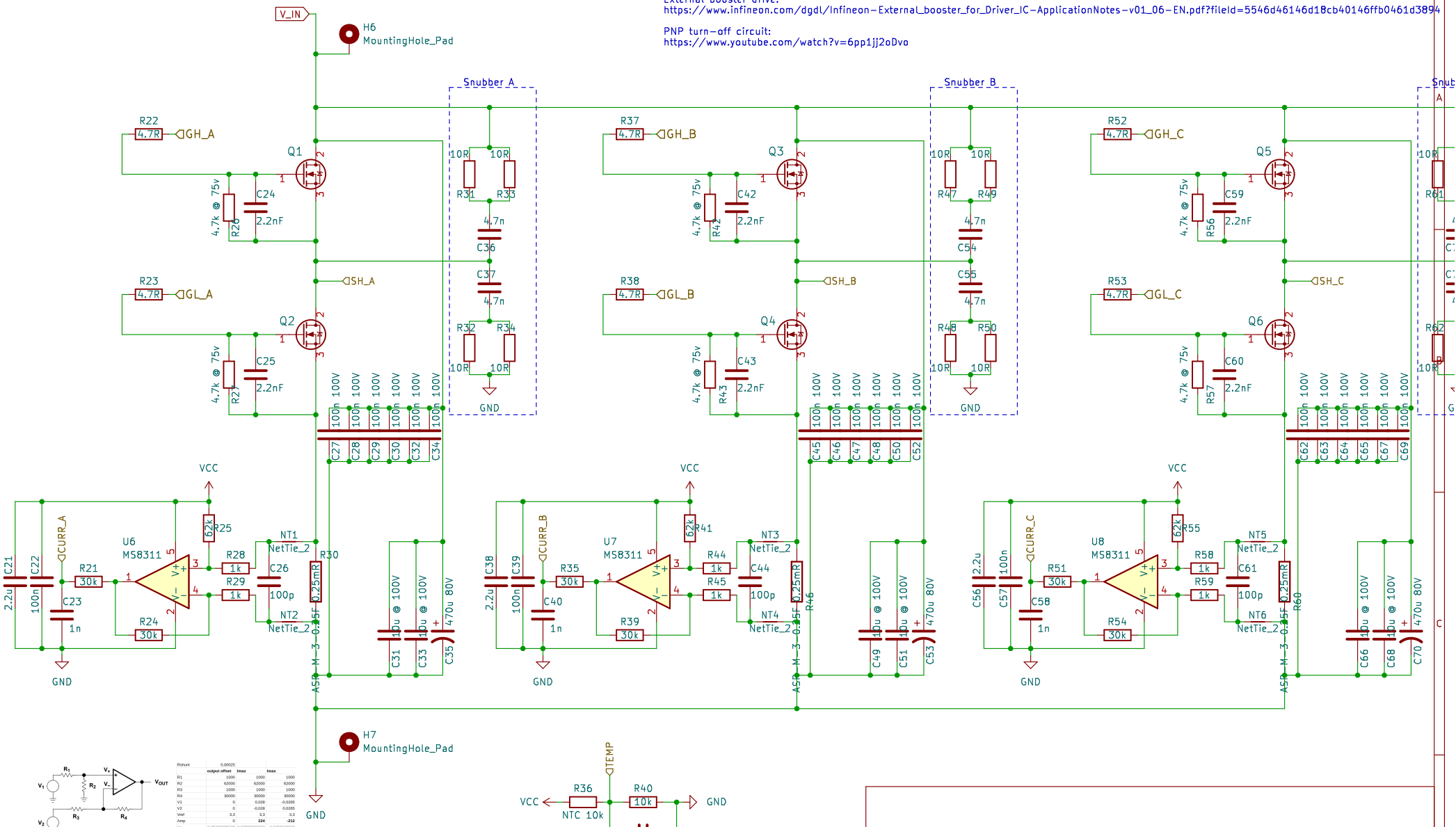

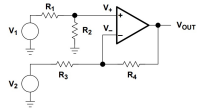

Rshunt	0,00025		
	output offset	Imax	Imax
R1	1000	1000	1000
R2	62000	62000	62000
R3	1000	1000	1000
R4	30000	30000	30000
V1	0	0,028	-0,0265
V2	0	-0,028	0,0265
Vref	3,3	3,3	3,3
Amp	0	**224**	**-212**
V+	0,05238095238	0,07993655794	0,02632019873
Vout	**1,623809524**	3,318031746	0,020340206635
dif. calc	50,25396825		

Vplus = (Vref-V1) * (R2 / R1 + R2) + V1
Vout = Vplus*(1 + (R4 / R3)) - V2*(R4 / R3)

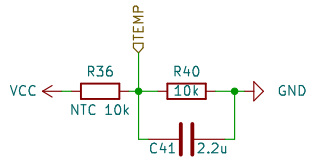

Calculate cut-off freq of low pass filter, pg 3:
https://www.st.com/resource/en/application_note/an4304-how-to-filter-the-input-of-a-highside-current-sensing-stmicroelectronics.pdf

Current sensing:
https://www.ti.com/lit/eb/slyy154a/slyy154a.pdf?ts=1678787132262&ref_url=https%253A%252F%252Fwww.startpage.com%252F
pg 4, pg 15

Jens Overby

Sheet: /power/
File: power.kicad_sch

Title: WATT'EVER

Size: A4	Date:	**Rev:**
KiCad E.D.A. kicad 6.0.2+dfsg-1		Id: 7/4

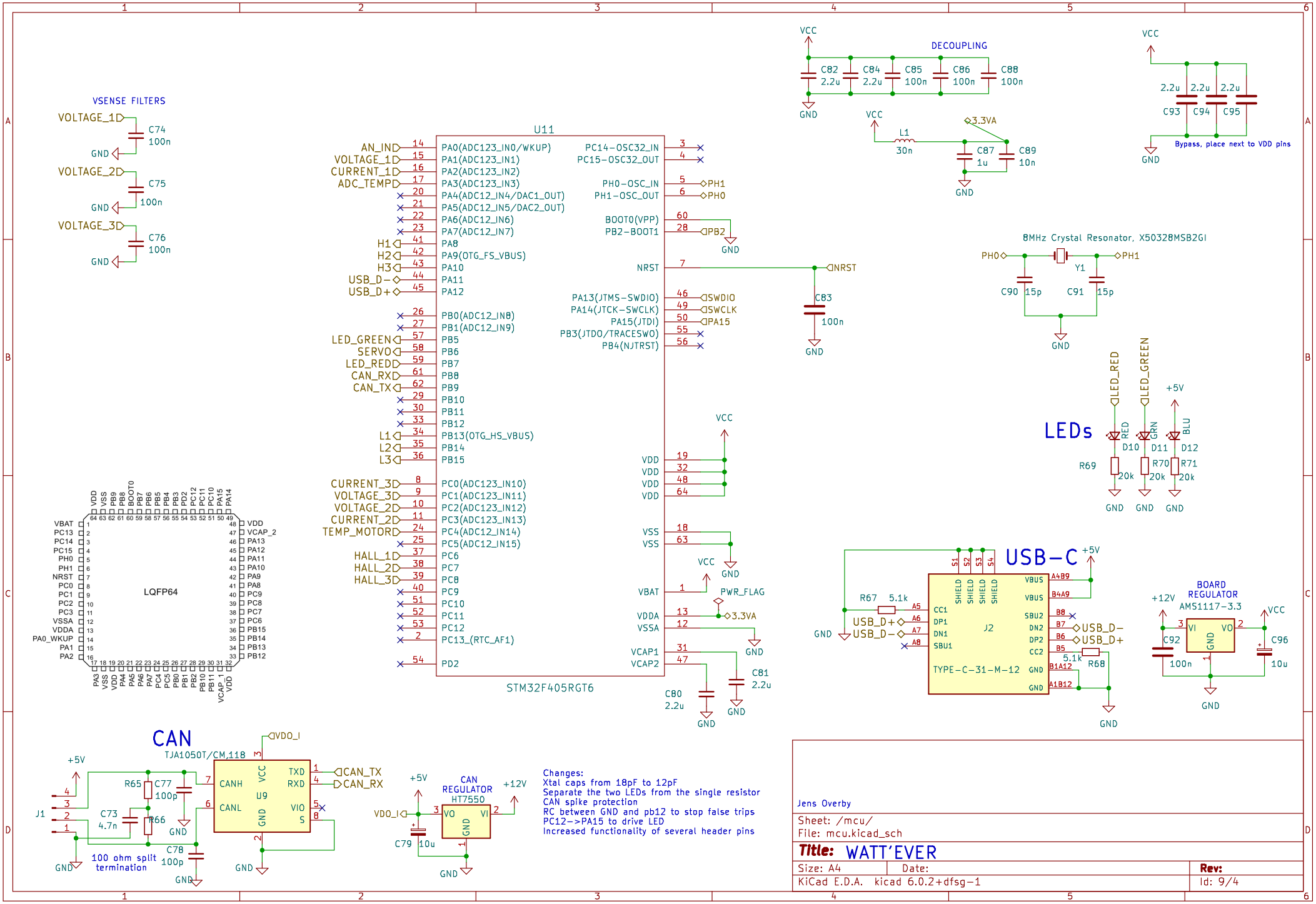
VSENSE FILTERS
VOLTAGE_1
C74 100n
GND
VOLTAGE_2
C75 100n
VOLTAGE_3
C76 100n
U11
STM32F405RGT6
AN_IN
VOLTAGE_1
CURRENT_1
ADC_TEMP
H1
H2
H3
USB_D−
USB_D+
LED_GREEN
SERVO
LED_RED
CAN_RX
CAN_TX
L1
L2
L3
CURRENT_3
VOLTAGE_3
VOLTAGE_2
CURRENT_2
TEMP_MOTOR
HALL_1
HALL_2
HALL_3
PA0(ADC123_IN0/WKUP)
PA1(ADC123_IN1)
PA2(ADC123_IN2)
PA3(ADC123_IN3)
PA4(ADC12_IN4/DAC1_OUT)
PA5(ADC12_IN5/DAC2_OUT)
PA6(ADC12_IN6)
PA7(ADC12_IN7)
PA8
PA9(OTG_FS_VBUS)
PA10
PA11
PA12
PB0(ADC12_IN8)
PB1(ADC12_IN9)
PB5
PB6
PB7
PB8
PB9
PB10
PB11
PB12
PB13(OTG_HS_VBUS)
PB14
PB15
PC0(ADC123_IN10)
PC1(ADC123_IN11)
PC2(ADC123_IN12)
PC3(ADC123_IN13)
PC4(ADC12_IN14)
PC5(ADC12_IN15)
PC6
PC7
PC8
PC9
PC10
PC11
PC12
PC13_(RTC_AF1)
PD2
PC14−OSC32_IN
PC15−OSC32_OUT
PH0−OSC_IN
PH1−OSC_OUT
BOOT0(VPP)
PB2−BOOT1
NRST
PA13(JTMS−SWDIO)
PA14(JTCK−SWCLK)
PA15(JTDI)
PB3(JTDO/TRACESWO)
PB4(NJTRST)
VDD
VSS
VBAT
VDDA
VSSA
VCAP1
VCAP2
PH1
PH0
SWDIO
SWCLK
PA15
C83 100n
C80 2.2u
C81 2.2u
PWR_FLAG
3.3VA
LQFP64
VCC
DECOUPLING
C82 2.2u
C84 2.2u
C85 100n
C86 100n
C88 100n
L1 30n
C87 1u
C89 10n
C93 2.2u
C94 2.2u
C95 2.2u
Bypass, place next to VDD pins
8MHz Crystal Resonator, X50328MSB2GI
Y1
C90 15p
C91 15p
LEDs
LED_RED
LED_GREEN
+5V
D10 RED
D11 GRN
D12 BLU
R69 20k
R70 20k
R71 20k
USB−C
J2
TYPE−C−31−M−12
R67 5.1k
R68 5.1k
USB_D+
USB_D−
BOARD REGULATOR
AMS1117−3.3
+12V
C92 100n
C96 10u
CAN
TJA1050T/CM,118
U9
CANH
CANL
TXD
RXD
VIO
S
VDD_I
CAN_TX
CAN_RX
R65
C77 100p
C73 4.7n
R66
C78 100p
J1
100 ohm split termination
CAN REGULATOR
HT7550
C79 10u
Changes:
Xtal caps from 18pF to 12pF
Separate the two LEDs from the single resistor
CAN spike protection
RC between GND and pb12 to stop false trips
PC12−>PA15 to drive LED
Increased functionality of several header pins
Jens Overby
Sheet: /mcu/
File: mcu.kicad_sch
Title: WATT'EVER
Size: A4
Date:
Rev:
KiCad E.D.A. kicad 6.0.2+dfsg−1
Id: 9/4