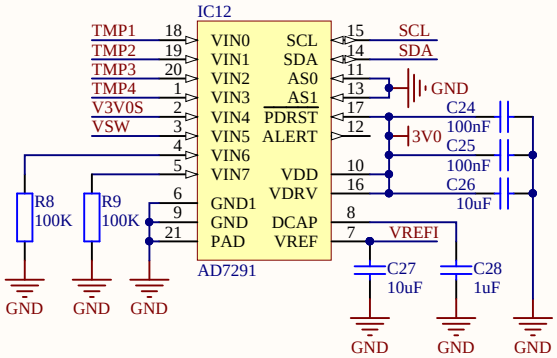

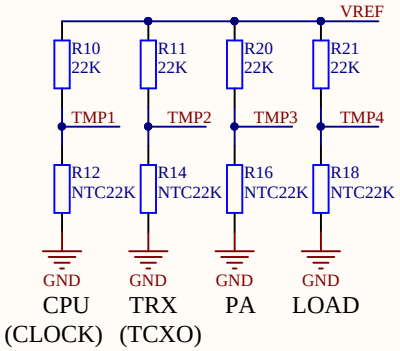

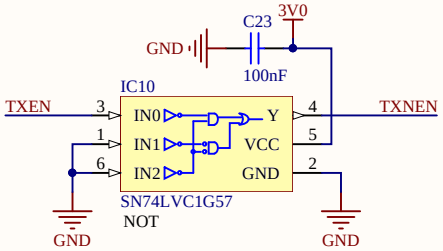

TX STATE ... TXEN = H
RX STATE ... TXEN = L

RESET DEFAULT ... TXEN = L

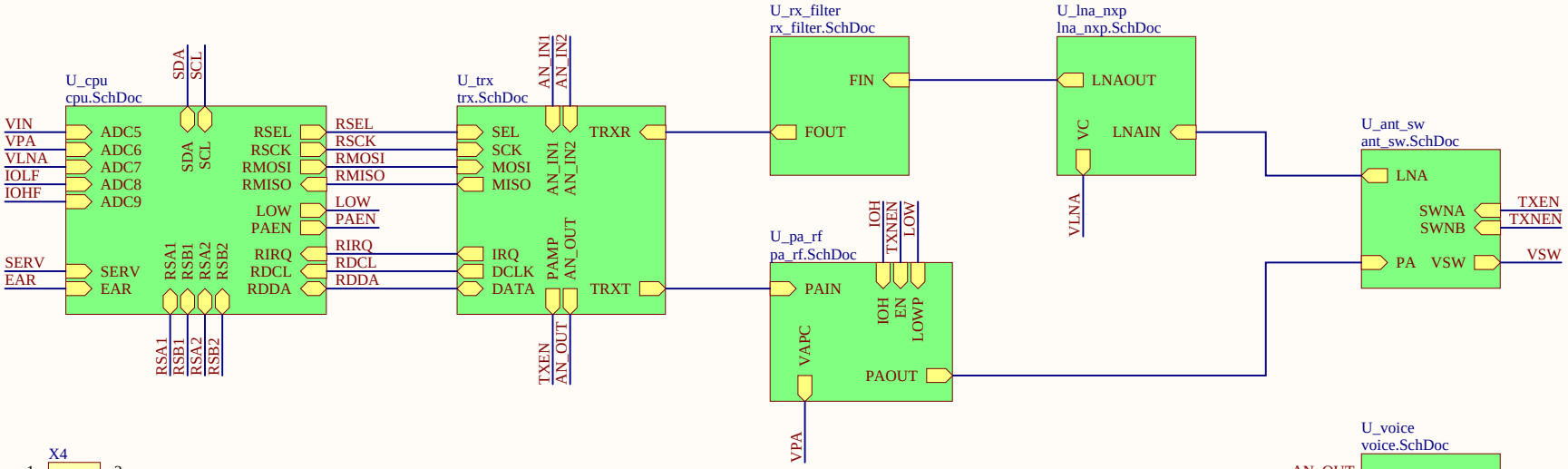

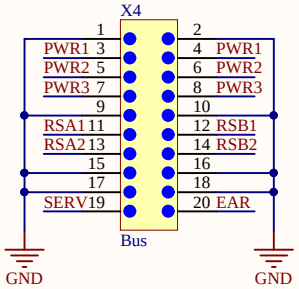

DOUBLE CHECK SERV/EAR POSITION!

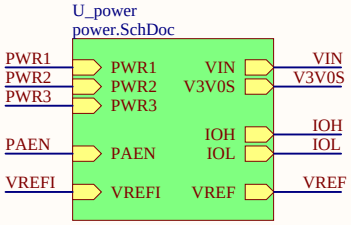

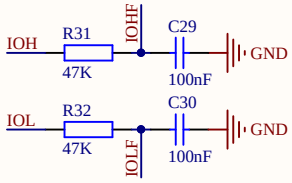

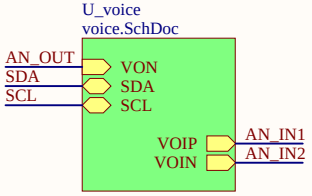

Title	PilsenCUBE II GROUND TEST RADIO	MAIN SHEET	
Size	Number		Revision
A4	11 / 2017		0
Date:	25.3.2019	Sheet of	1 of 9
File:	K:\altium\pilsatii_radio_3\main.SchDoc	Drawn By:	OK1CTR@seznam.cz

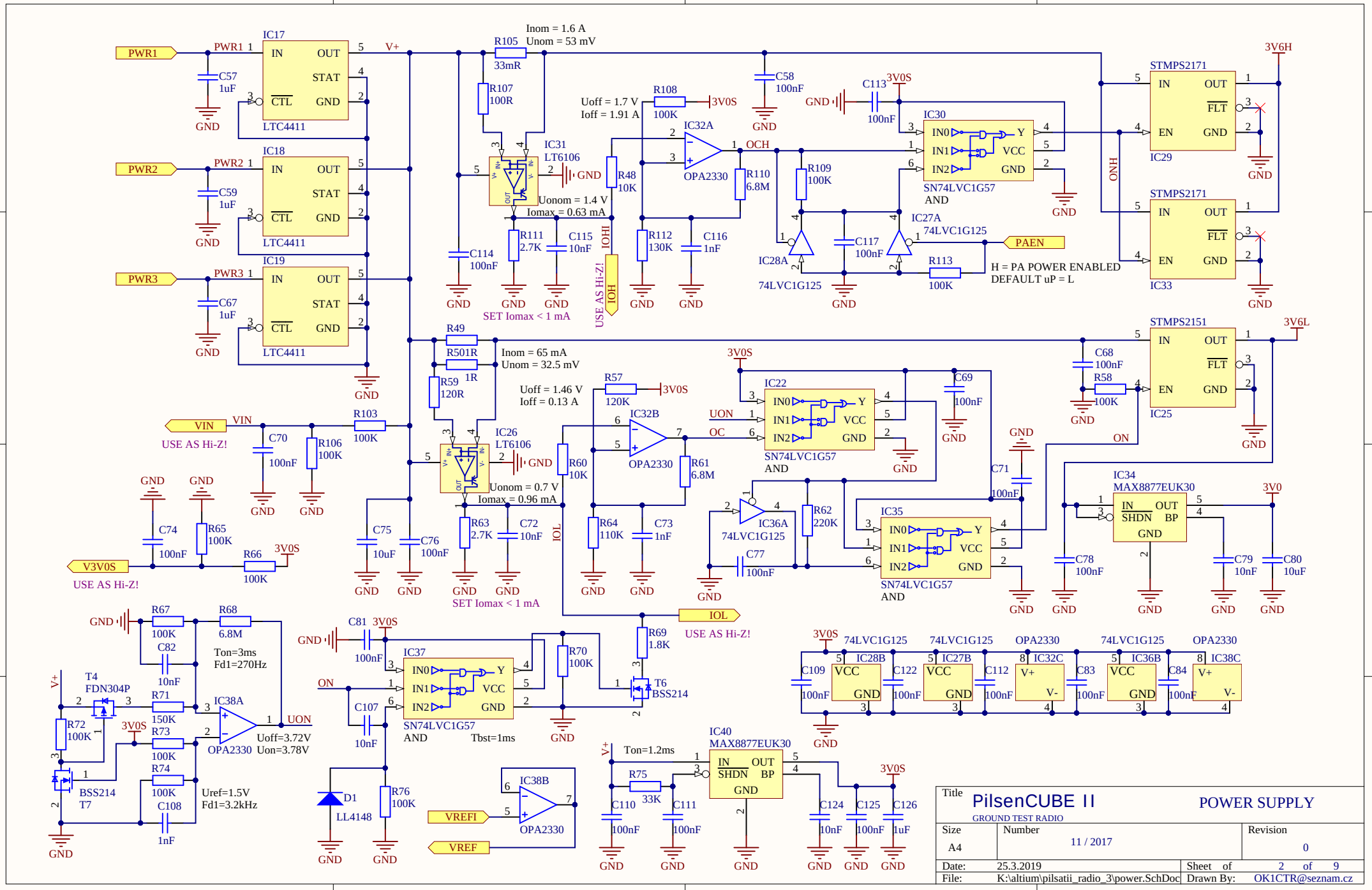
PWR1
PWR2
PWR3
IC17
IC18
IC19
LTC4411
IN
OUT
STAT
CTL
GND
V+
C57 1uF
C59 1uF
C67 1uF
R105 33mR
Inom = 1.6 A
Unom = 53 mV
R107 100R
IC31 LT6106
Uonom = 1.4 V
Iomax = 0.63 mA
R111 2.7K
C115 10nF
C114 100nF
SET Iomax < 1 mA
IOHI
IOH
USE AS Hi-Z!
R108 100K
3V0S
Uoff = 1.7 V
Ioff = 1.91 A
IC32A
OPA2330
OCH
R48 10K
R110 6.8M
R112 130K
C116 1nF
C58 100nF
C113 100nF
IC30
SN74LVC1G57
AND
IN0
IN1
IN2
Y
VCC
R109 100K
IC28A
74LVC1G125
IC27A
C117 100nF
R113 100K
PAEN
H = PA POWER ENABLED
DEFAULT uP = L
ONH
STMPS2171
IC29
IC33
FLT
EN
3V6H
R49
R501R 1R
Inom = 65 mA
Unom = 32.5 mV
R59 120R
Uoff = 1.46 V
Ioff = 0.13 A
R57 120K
IC32B
OPA2330
R61 6.8M
R60 10K
R64 110K
C73 1nF
IC26 LT6106
Uonom = 0.7 V
Iomax = 0.96 mA
R63 2.7K
C72 10nF
C75 10uF
C76 100nF
IOL
VIN
USE AS Hi-Z!
R103 100K
C70 100nF
R106 100K
V3V0S
C74 100nF
R65 100K
R66 100K
IC22
SN74LVC1G57
AND
UON
OC
C69 100nF
IC36A
74LVC1G125
C77 100nF
R62 220K
IC35
SN74LVC1G57
AND
C71 100nF
STMPS2151
IC25
3V6L
C68 100nF
R58 100K
ON
IC34
MAX8877EUK30
IN
SHDN
OUT
BP
3V0
C78 100nF
C79 10nF
C80 10uF
R67 100K
R68 6.8M
C82 10nF
Ton=3ms
Fd1=270Hz
T4
FDN304P
R71 150K
R72 100K
R73 100K
R74 100K
C108 1nF
BSS214
T7
IC38A
OPA2330
UON
Uoff=3.72V
Uon=3.78V
Uref=1.5V
Fd1=3.2kHz
C81 100nF
IC37
SN74LVC1G57
AND
Tbst=1ms
C107 10nF
R70 100K
R69 1.8K
T6
BSS214
D1
LL4148
R76 100K
IC38B
OPA2330
VREFI
VREF
IC28B
IC27B
IC32C
IC36B
IC38C
C109 100nF
C122 100nF
C112 100nF
C83 100nF
C84 100nF
Ton=1.2ms
R75 33K
C110 100nF
C111 100nF
IC40
MAX8877EUK30
C124 10nF
C125 100nF
C126 1uF
Title
PilsenCUBE II
GROUND TEST RADIO
POWER SUPPLY
Size
A4
Number
11 / 2017
Revision
0
Date: 25.3.2019
Sheet of 2 of 9
File: K:\altium\pilsatii_radio_3\power.SchDoc
Drawn By: OK1CTR@seznam.cz

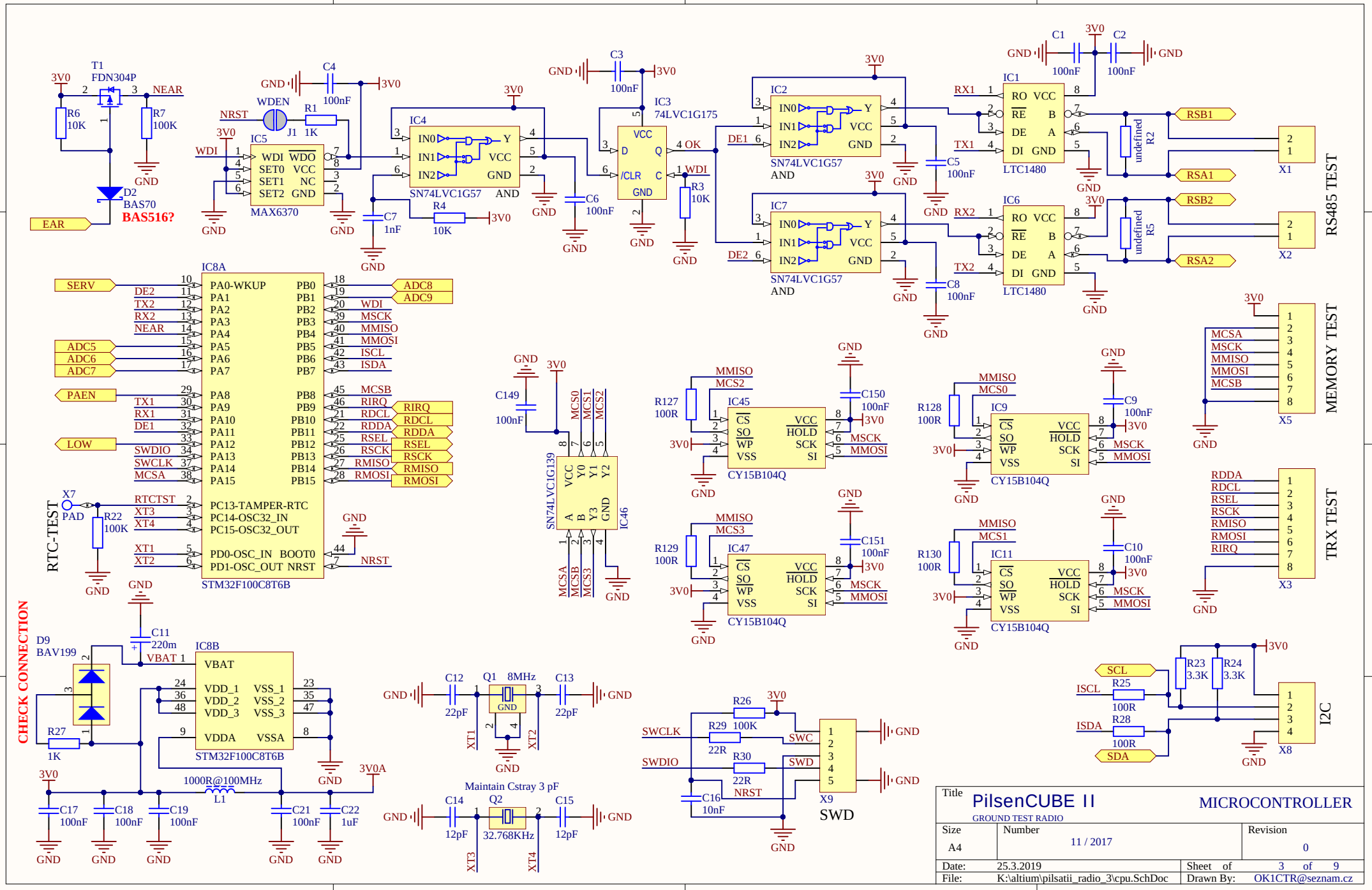

Title	PilsenCUBE II GROUND TEST RADIO	MICROCONTROLLER
Size: A4	Number: 11 / 2017	Revision: 0
Date: 25.3.2019	Sheet of 3 of 9	
File: K:\altium\pilsatii_radio_3\cpu.SchDoc	Drawn By: OK1CTR@seznam.cz	

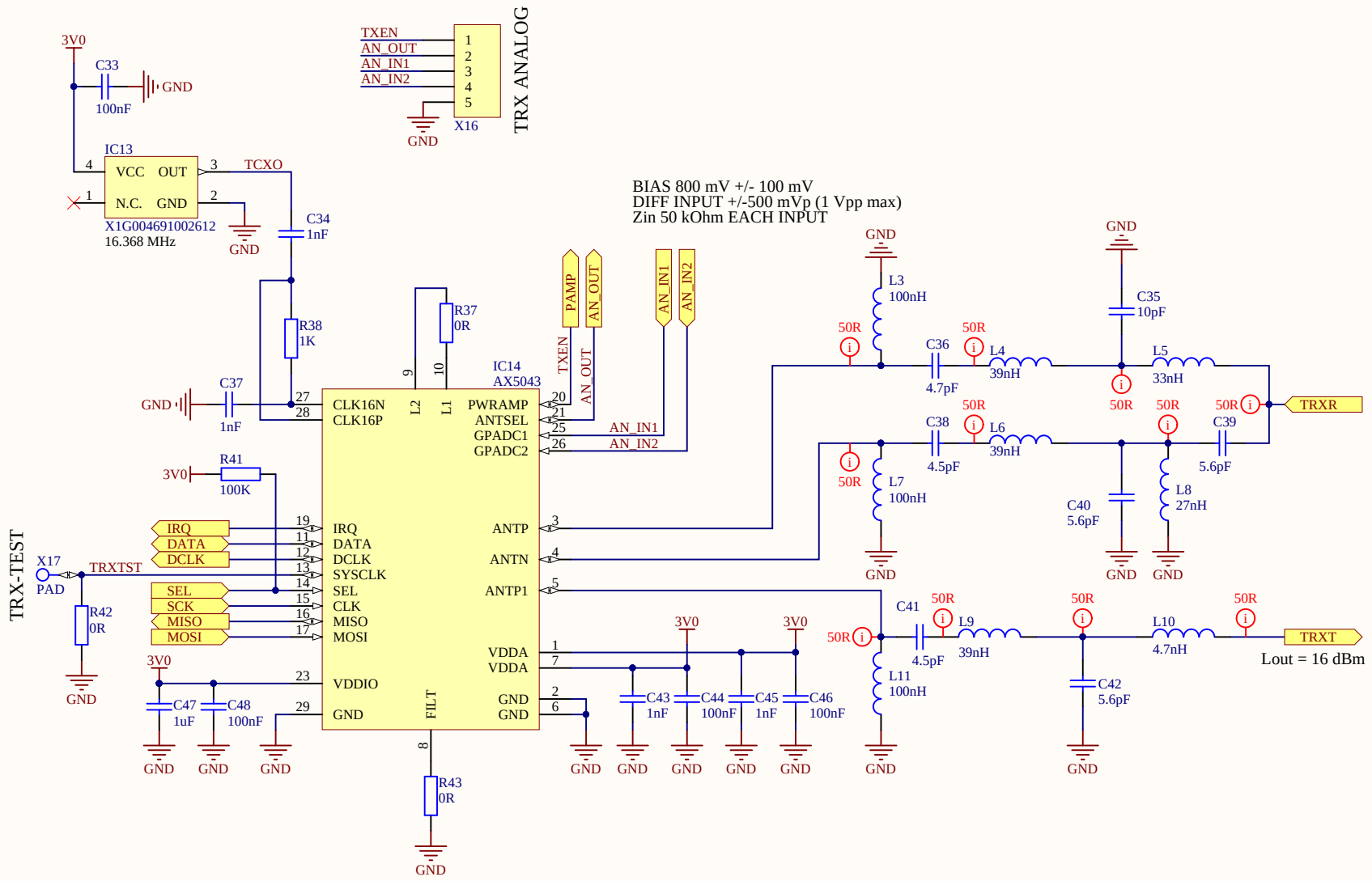

Title	PilsenCUBE II GROUND TEST RADIO	TRANSCEIVER	
Size	Number		Revision
A4	11 / 2017		0
Date:	25.3.2019	Sheet of	4 of 9
File:	K:\altium\pilsatii_radio_3\trx.SchDoc	Drawn By:	OK1CTR@seznam.cz

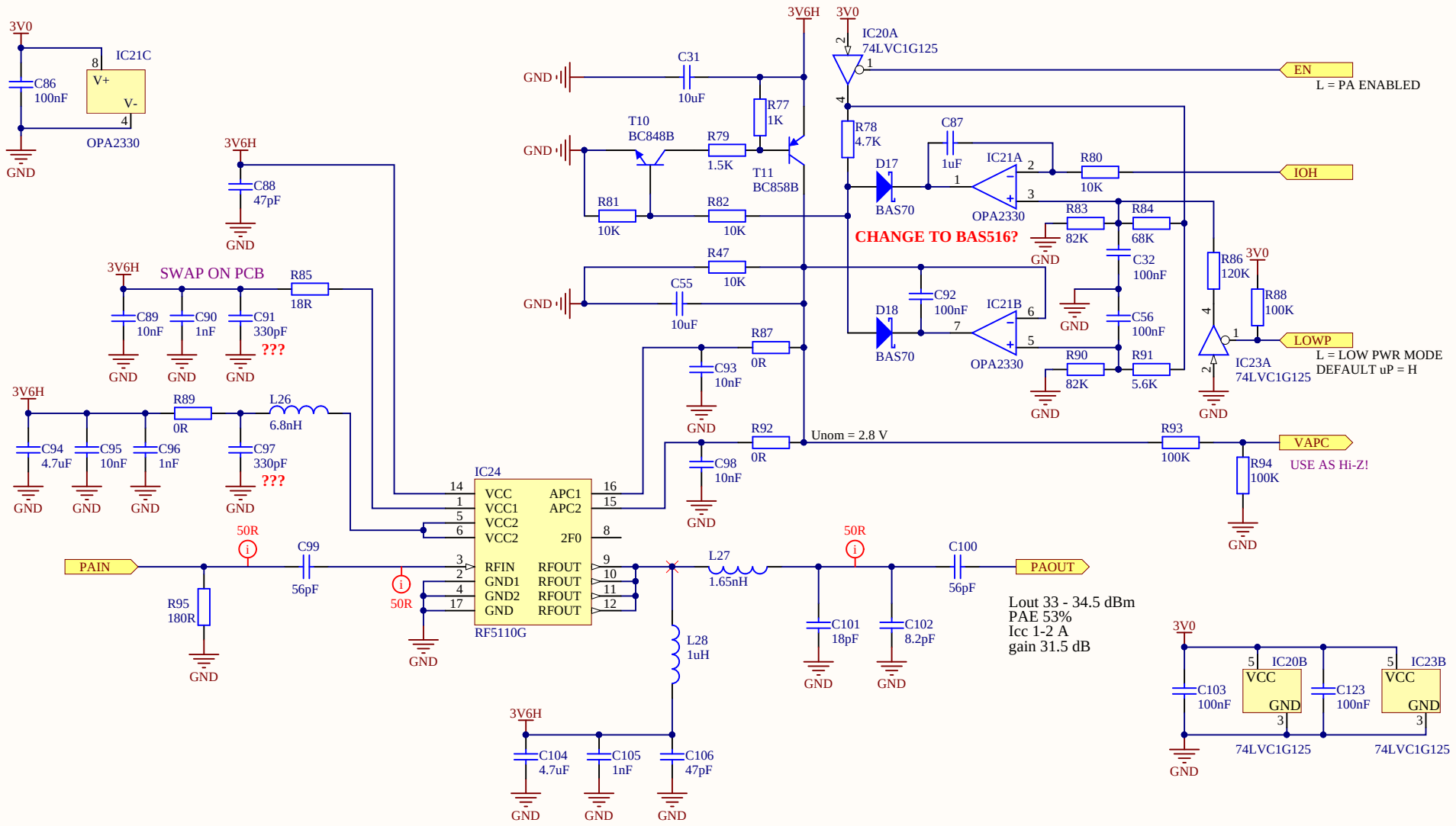

Title	PilsenCUBE II GROUND TEST RADIO	POWER AMPLIFIER RF	
Size A4	Number 11 / 2017		Revision 0
Date: 25.3.2019		Sheet of 5 of 9	
File: K:\altium\pilsatii_radio_3\pa_rf.SchDoc		Drawn By: OK1CTR@seznam.cz	

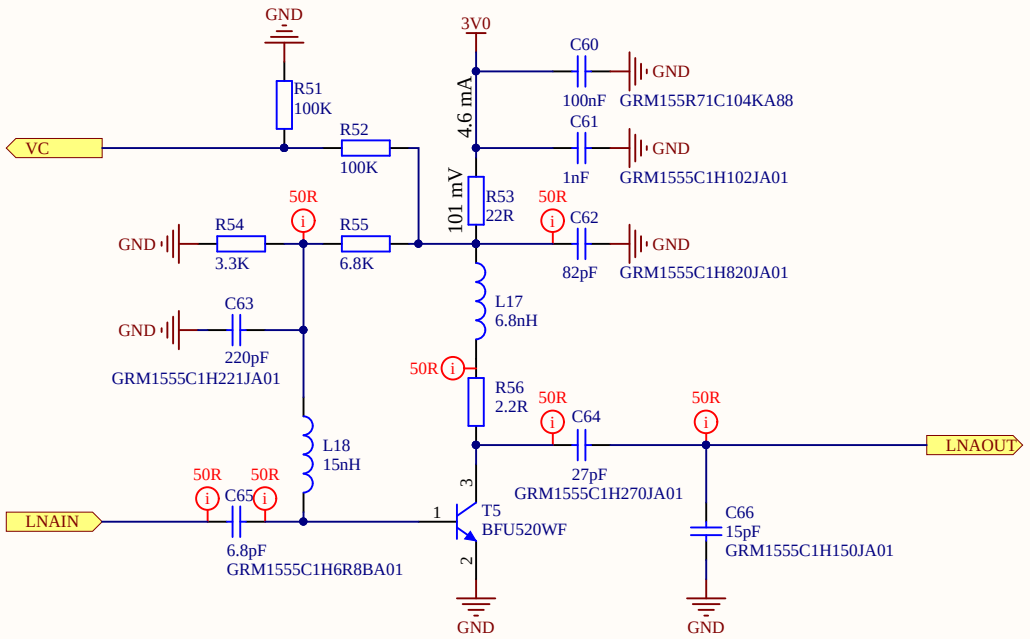

RL -14 dB / 436 MHz
NF 0.8 dB
17 dB
RL -33.5 dB / 436 MHz

Title	PilsenCUBE II GROUND TEST RADIO	LOW NOISE AMPLIFIER NXP	
Size A4	Number 11 / 2017		Revision 0
Date: 25.3.2019		Sheet of 6 of 9	
File: K:\altium\..\lna_nxp.SchDoc		Drawn By: OK1CTR@seznam.cz	

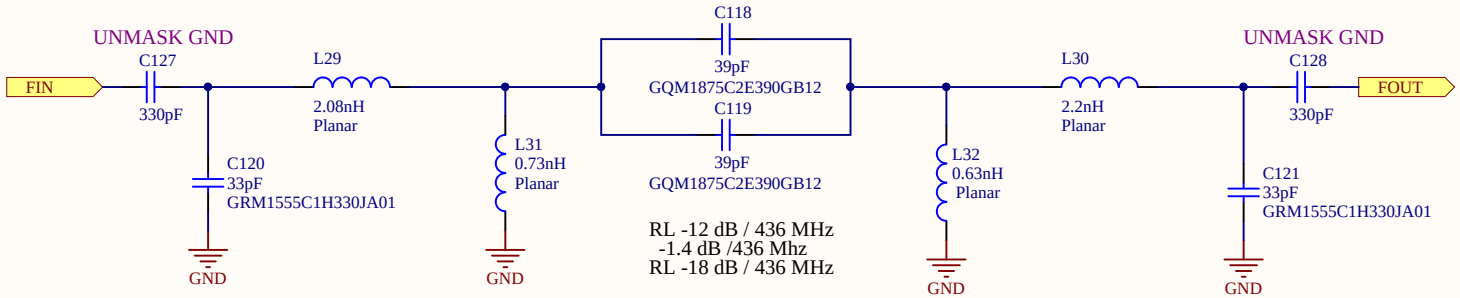

Title	PilsenCUBE II GROUND TEST RADIO	RECEIVER BANDPASS FILTER	
Size A4	Number 11 / 2017		Revision 0
Date: 25.3.2019		Sheet of 7 of 9	
File: K:\altium\..\rx_filter.SchDoc		Drawn By: OK1CTR@seznam.cz	

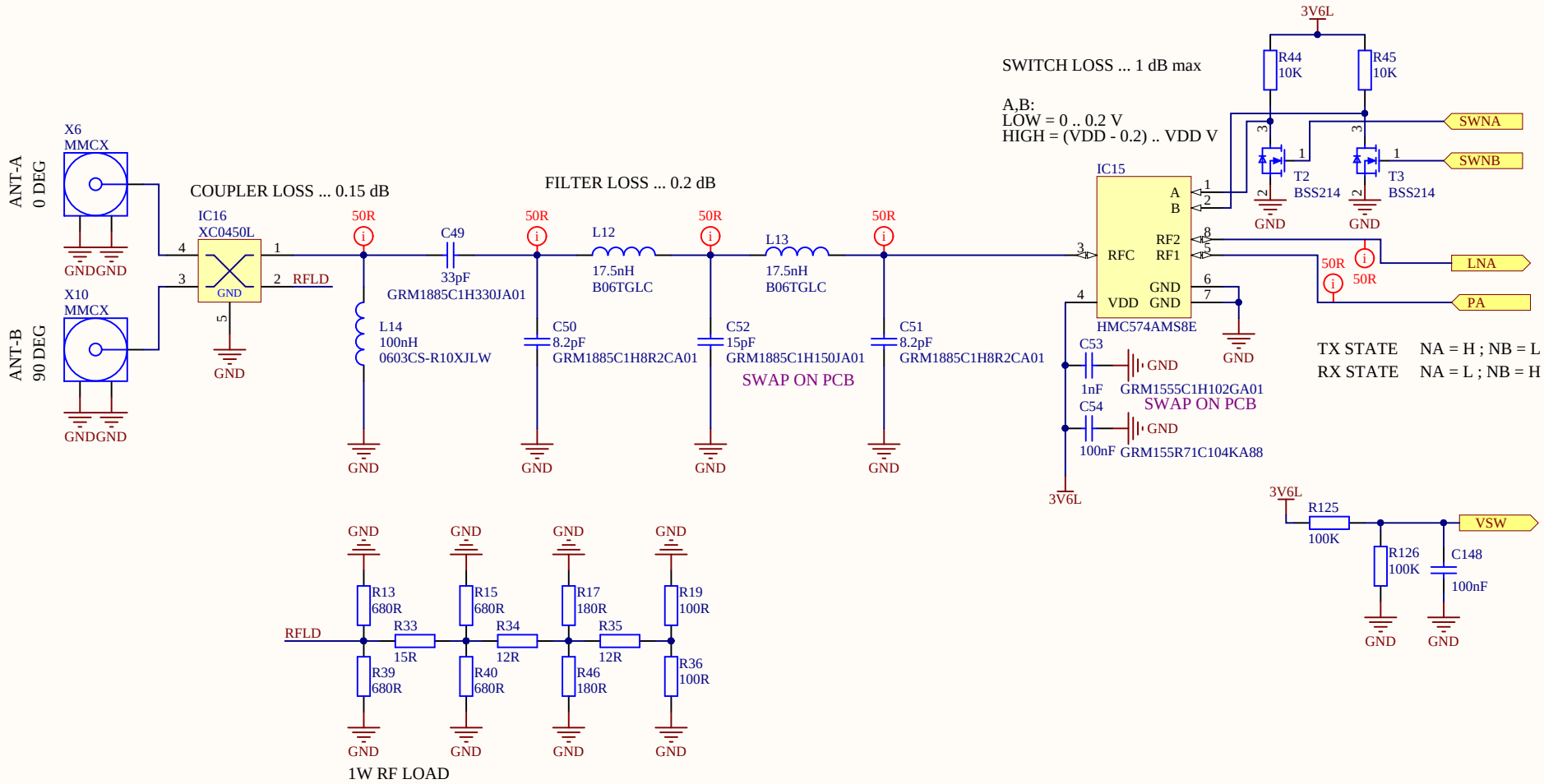

Title	PilsenCUBE II GROUND TEST RADIO	ANTENNA SWITCH + FILTER	
Size A4	Number 11 / 2017		Revision 0
Date: 25.3.2019		Sheet of 8 of 9	
File: K:\altium\..\ant_sw.SchDoc		Drawn By: OK1CTR@seznam.cz	

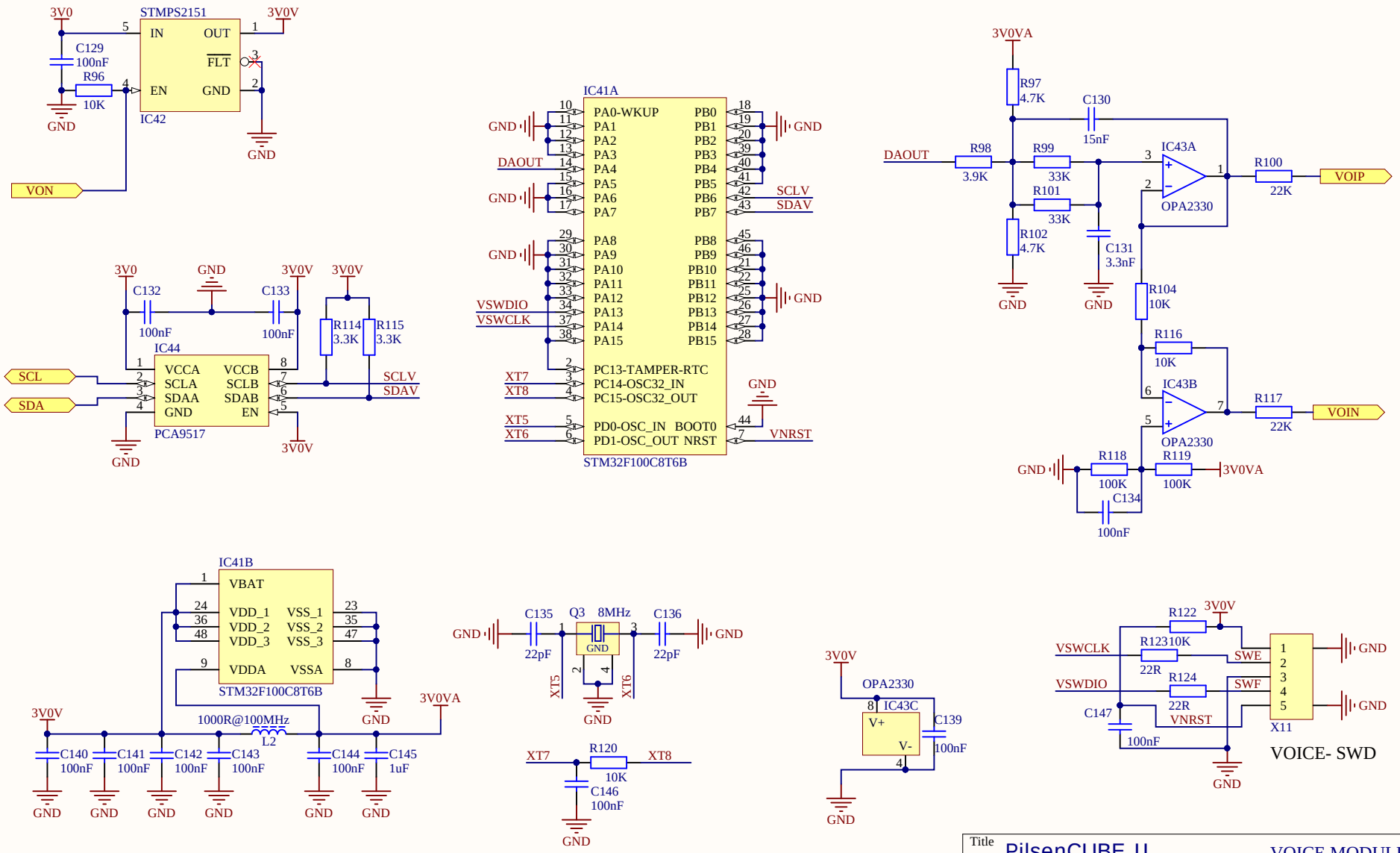

Title	PilsenCUBE II GROUND TEST RADIO	VOICE MODULE
Size A4	Number 11 / 2017	Revision 0
Date: 25.3.2019	Sheet of 9 of 9	
File: K:\altium\pilsatii_radio_3\voice.SchDoc	Drawn By: OK1CTR@seznam.cz	