Engine Management Unit (EMU)

Hardware and Software Reference

Ken Overton

KJO Liquid Rocket Motor Control System

Version: 0.5
Date: March 2026

This document describes the hardware, software architecture, valve control system, Fill valve handshake protocol, sensor subsystems, buzzer and visual indicator state machine, and control flow of the Engine Management Unit. The EMU is mounted inside the rocket and is the primary actuator and sensor node of the KJO system.

© 2025–2026 Ken Overton. All rights reserved.

Contents

1 Hardware Overview **2**
1.1 Component Summary . . . 2
1.2 MCP23X17 GPIO Expander Pin Map . . . 2
1.3 Hardware Block Diagram . . . 3

2 Software Architecture **3**
2.1 Module Summary . . . 3
2.2 Main Loop Control Flow . . . 4

3 Valve Control Subsystem **4**
3.1 Valve Base Class (`KJO_Valve`) . . . 4
3.2 EMU State Machine . . . 4
3.3 Engine Start Sequence (7 Steps) . . . 5
3.4 Servo Mechanical Geometry and Calibration . . . 6
3.5 Master_Valve Class (`KJO_Master_Valve`) . . . 6

4 Fill Valve Handshake Protocol **6**

5 Command Dispatch **7**
5.1 Command Table . . . 8

6 Umbilical Quick-Release (`QR_Master`) **8**
6.1 Overview . . . 8

7 Buzzer and Visual Indicator **9**
7.1 Startup Self-Test . . . 9
7.2 NeoPixel Indicator State Machine . . . 9
7.3 Buzzer Behaviour . . . 10
7.4 NeoPixel_Indicator API . . . 10

8 Sensor Subsystems **10**
8.1 Pressure Transducer Signal Chain . . . 11
8.2 Continuous Pressure Recording . . . 11

9 SD Logging **11**

10 Version History **11**

1 Hardware Overview

1.1 Component Summary

Component	Part	Interface	Notes
Microcontroller	Adafruit Feather M0 (ATSAMD21G18A, 48 MHz)	—	
OLED Display	SH1107, 128×64, 1.12"	I^2C	
GPIO Expander	MCP23X17 (16 I/O)	I^2C	Relays, buttons, AUX_I
PWM Servo Wing	Adafruit 8-channel wing (PCA9685)	I^2C	Ox, Fuel, Dump servos
ADC	ADS1015 (12-bit, 4-ch)	I^2C	Ch0: unassigned; Ch1: c
Thermocouple IF	MAX31856 (2×)	SPI	TC1, TC2
Real-Time Clock	PCF8523	I^2C	
LoRa Radio	HopeRF RFM95W (Semtech SX1276), 915 MHz	SPI	
SD Card	Standard SPI SD socket	SPI	
NeoPixel	WS2812B 4×8 array	GPIO	Status indicator
Igniter Relay	SPDT relay via MCP23X17	GPIO	
Buzzer	Passive piezo via MCP23X17 relay	GPIO	
Battery	3.7 V LiPo; voltage divider on ADS1015	ADC	

1.2 MCP23X17 GPIO Expander Pin Map

Pin Name	Direction	Function
`BUTTON_A_EIO`	IN	Front-panel button A (hold-to-open Dump valve)
`BUTTON_B_EIO`	IN	Front-panel button B (close Fill valve)
`BUTTON_C_EIO`	IN	Front-panel button C (open Fill valve)
`IGNITER_EIO`	OUT	Igniter relay drive
`BUZZER_EIO`	OUT	Buzzer relay drive
`AUX_IO_1` (`FILL_VALVE_CMD_EIO`)	OUT	Fill valve CMD line to GSEMU
`AUX_IO_2` (`FILL_VALVE_STATUS_EIO`)	IN	Fill valve STATUS line from GSEMU
`AUX_IO_3` (`QR_CMD_EIO`)	OUT	Umbilical QR release CMD (HIGH = hold, LOW = releas
`AUX_IO_4` (`RELEASE_STATE_EIO`)	IN	Separation state (INPUT_PULLUP; LOW = connected,
`AUX_IO_5` (`LAUNCH_ENABLE_EIO`)	OUT	Remote start enable to GSEMU (HIGH = disabled, LOW
`AUX_IO_6` (`REMOTE_START_EIO`)	IN	Remote start command from GSEMU (INPUT_PULLUP

1.3 Hardware Block Diagram

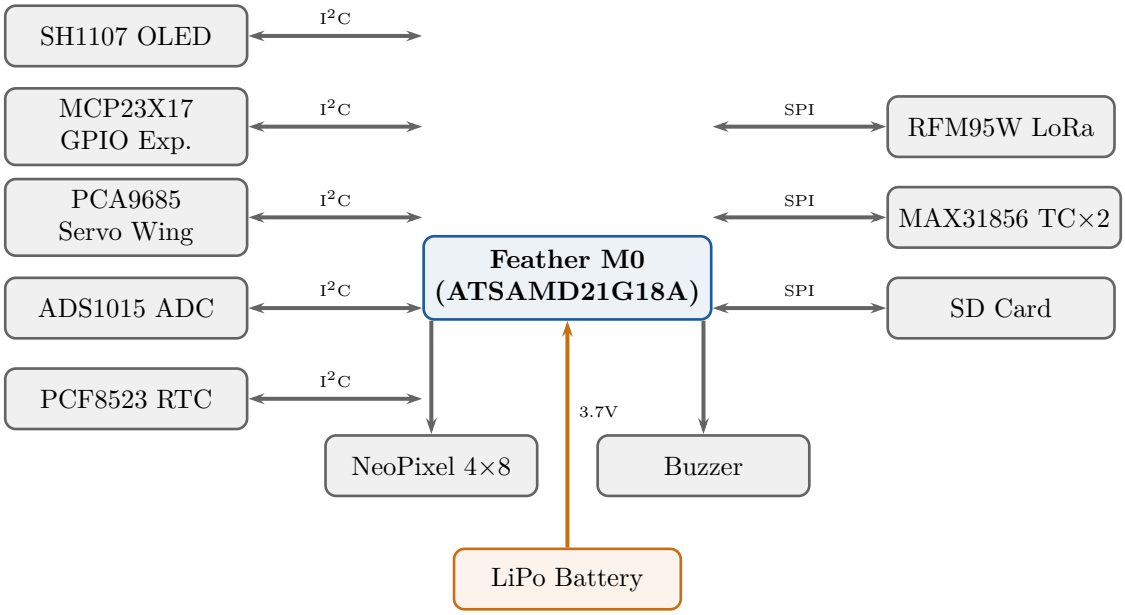

Figure 1: EMU hardware block diagram.

2 Software Architecture

2.1 Module Summary

Module	Location	Responsibility
`main.cpp`	local	Setup, loop, command dispatch, state machines
`KJO_Valve`	local	Base valve: servo drive, pot feedback
`KJO_Master_Valve`	local	Fill valve CMD/STATUS GPIO handshake
`KJO_QR_Master`	local	Umbilical QR release proxy
`KJO_Control_System`	local	`Execute_Command()` routing table
`KJO_Pressure`	local	Pressure transducer read / convert
`KJO_Temperature`	local	Analog temperature transducer
`KJO_Thermocouple`	local	MAX31856 thermocouple read
`KJO_Analog`	local	ADS1015 ADC wrapper
`KJO_GPIO`	local	MCP23X17 pin definitions, Relay class
`KJO_EMU_Display`	local	SH1107 OLED display functions
`KJO_Indicator`	local	NeoPixel status indicator (solid, timed, flash)
`KJO_Logging`	local	SD log file constants
`KJO_Radio`	shared	Radio pin constants, frequency
`KJO_Command_Defs`	shared	Command codes, packet structures
`KJO_System_Config`	shared	Version, platform constants

2.2 Main Loop Control Flow

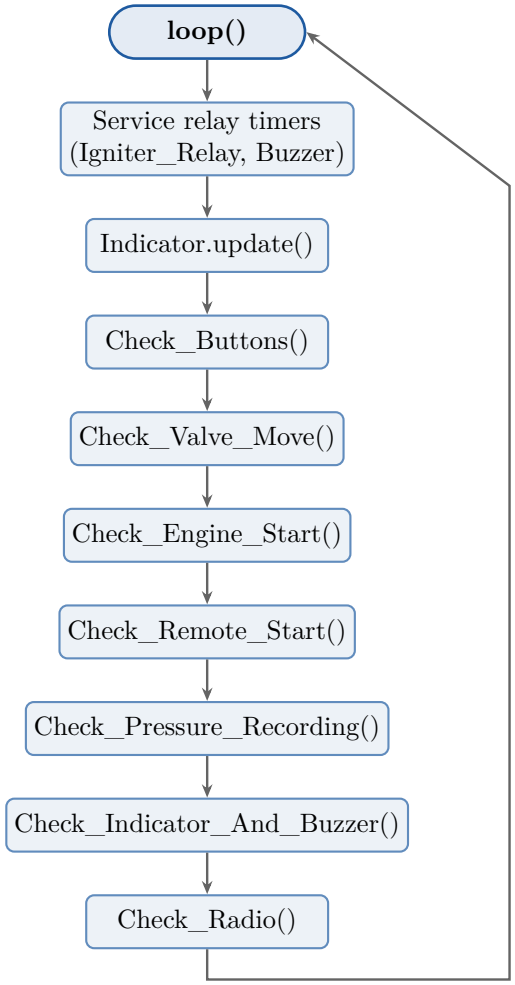

Figure 2: EMU main loop control flow.

3 Valve Control Subsystem

3.1 Valve Base Class (`KJO_Valve`)

The `Valve` class encapsulates a servo-driven, potentiometer-feedback valve:

- **Drive**: PWM signal to PCA9685 servo wing channel.
- **Feedback**: Potentiometer on ADS1015 ADC channel; position expressed as 0–100% open.
- **Position control**: `openTo(%)` sets target; `update()` drives servo until pot reading reaches target within dead-band.
- **State queries**: `isMoving()`, `isStopped()`, `isOpen()`, `isClosed()`.

3.2 EMU State Machine

The EMU operates as a top-level state machine with three states:

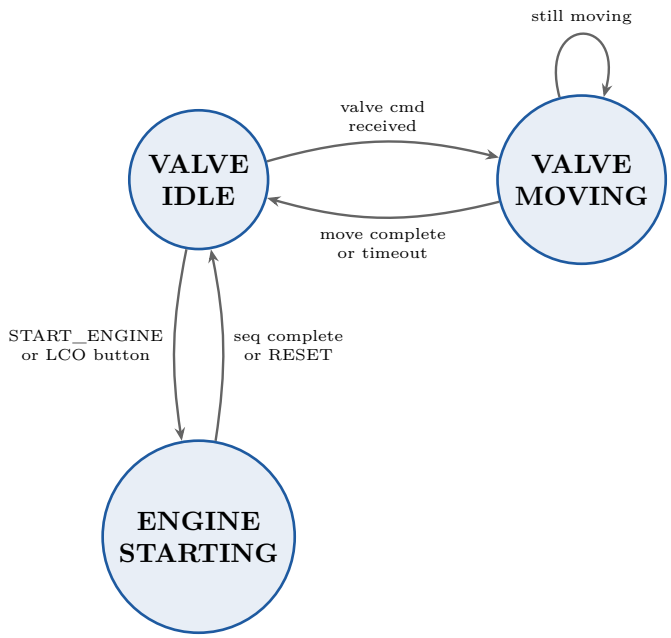

Figure 3: EMU top-level state machine. HEARTBEAT and RESET are processed in any state. All other commands are dropped during VALVE_MOVING or ENGINE_STARTING.

3.3 Engine Start Sequence (7 Steps)

When **`START_ENGINE`** or a LCO panel button press is received, the EMU enters `ENGINE_STARTING` and advances through seven steps non-blockingly in `Check_Engine_Start()`:

Step	Trigger	Action
0	immediate	Verify Ox, Fuel, Dump valves are closed; abort on failure
1	step 0 pass	Command umbilical QR release; start 3 s separation timer
2	timer	Poll `isSeparated()`; abort on timeout
3	separation	Fire igniter relay (`IGNITER_FIRE_DURATION_MS` pulse); start delay-1 timer
4	delay-1	Open Ox feed valve
5	Ox stopped	Start delay-2 timer
6	delay-2	Open Fuel feed valve
7	Fuel stopped	Send OK response; set `engine_running = true`

Any abort at steps 0–2 sends a `Command_Return_Packet` with `status = false` and an `r_val` error code (-1 = precondition failure, -2 = QR timeout). **`RESET`** cancels the sequence at any step.

3.4 Servo Mechanical Geometry and Calibration

Gear Train and Servo Travel

Each valve is actuated by a ServoCity 2000-0025-0504 5-turn servo through a 16-tooth pinion driving a 60-tooth valve gear:

Parameter	Value
Gear ratio	$60 \div 16 = \mathbf{3.75} : \mathbf{1}$
Valve travel (open → close)	90°
Required servo rotation	$90 \times 3.75 = 337.5°$
Servo full mechanical range	1800° (5 turns) over 500–2500 μs
PCA9685 frequency	1100 Hz (non-standard; improves count resolution)
PWM period at 1100 Hz	$1 \div 1100 = 909.09$ μs
μs per 12-bit count	$909.09 \div 4096 \approx 0.2219$ μs/count
μs for 337.5° servo travel	$337.5 \times (2000\ \mu s \div 1800ř) = 375$ μs
Theoretical Δ counts	$375 \div 0.2219 \approx$ **1690** counts

Note

Running the PCA9685 at 1100 Hz (instead of the standard 50 Hz) compresses the usable pulse-width span into the lower portion of the 12-bit count range, effectively improving resolution over the ∼1.1 turns of servo travel actually used.

Empirical Calibration (March 2026)

Bench testing showed the theoretical 1690-count span caused all four valves to travel noticeably *more* than 90°. All four valves were re-calibrated. The empirical open-to-close deltas average ≈1583 counts (∼6% below theoretical), consistent with the servo being slightly more sensitive in the operating band than the linear model predicts.

Valve	Servo PWM (12-bit counts)				Pot ADC (12-bit counts)		
	Open	Close	Δ	Implied travel	Open	Closed	Δ
Fill	2179	3719	1540	∼82.1°	1238	2984	1746
Oxidizer	2050	3690	1640	∼87.4°	1139	2857	1718
Fuel	2130	3780	1650	∼87.9°	1170	2918	1748
Dump	2229	3729	1500	∼79.9°	1329	3055	1726

3.5 Master_Valve Class (`KJO_Master_Valve`)

`Master_Valve` implements the CMD/STATUS GPIO handshake for the Fill valve. The Fill valve servo and pot reside on the GSEMU; the EMU controls it via `AUX_IO_1` (CMD) and monitors `AUX_IO_2` (STATUS).

4 Fill Valve Handshake Protocol

The Fill valve servo and potentiometer reside on the GSEMU. The EMU and GSEMU exchange state using two GPIO lines:

Signal	Driver	Meaning when HIGH
`AUX_IO_1` (CMD)	EMU	Fill valve commanded open
`AUX_IO_2` (STATUS)	GSEMU	Fill valve has reached commanded position

Open sequence:

1. EMU calls `Fill_Valve.open()`.
2. `Master_Valve` asserts CMD = HIGH.
3. GSEMU `Slave_Valve.update()` detects CMD rising edge; drives servo to open.
4. GSEMU asserts STATUS = HIGH when servo reaches open position.
5. EMU reads STATUS = HIGH; reports completion.

Close sequence: CMD de-asserted (LOW); GSEMU closes servo; STATUS driven LOW.

5 Command Dispatch

`Check_Radio()` receives packets from the RCU and routes them. Commands are processed in priority order:

1. **`HEARTBEAT`** — always processed; returns `Heartbeat_Response_Packet` with EMU voltage and all four valve positions.
2. **`RESET`** — always processed regardless of state; calls `Execute_Abort()`.
3. All other commands are *dropped* if `emu_state` is VALVE_MOVING or ENGINE_STARTING.
4. Per-command interceptors (deferred valve moves, start sequence, recording).
5. All remaining commands dispatched to `Execute_Command()`.

5.1 Command Table

Command	EMU Action
`HEARTBEAT`	Respond with EMU voltage and all four valve positions
`RESET`	Execute_Abort(): all valves close, igniter off, buzzer off, recording off, indicator off
`BEGIN_FILL`	Open Fill valve (Master_Valve); start continuous pressure recording
`STOP_FILL`	Close Fill valve; recording continues until ambient
`DUMP`	Open Dump valve (deferred; sends response when complete)
`STOP_DUMP`	Close Dump valve (deferred)
`OPEN_OXIDIZER_FEED`	Open Ox valve (deferred)
`CLOSE_OXIDIZER_FEED`	Close Ox valve (deferred)
`OPEN_FUEL_FEED`	Open Fuel valve (deferred)
`CLOSE_FUEL_FEED`	Close Fuel valve (deferred)
`START_ENGINE_FLOWS`	Close Fill; open Ox + Fuel simultaneously (deferred dual-valve)
`STOP_ENGINE_FLOWS`	Close Ox + Fuel simultaneously (deferred dual-valve)
`START_ENGINE`	Arm 7-step ignition sequence (response sent asynchronously)
`ENABLE_LCO_CONTROL`	param $\neq 0$: assert LAUNCH_ENABLE_EIO LOW, set `lco_enabled`; param $= 0$: deassert HIGH, clear `lco_enabled`
`START_PRESSURE_RECORDING`	Activate continuous sensor recording
`STOP_PRESSURE_RECORDING`	Deactivate continuous sensor recording
`READ_VALVE_POSITION`	Return current position (%) of the valve specified in `param`
`READ_TANK_PRESSURE`	Return tank pressure (PSI)
`READ_CHAMBER_PRESSURE`	Return chamber pressure (PSI)
`READ_TANK_TEMP`	Return tank temperature
`READ_CHAMBER_TEMP`	Return chamber temperature
`QR_RELEASE`	Call `QR_Master::release()` (CMD LOW); response immediate

6 Umbilical Quick-Release (`QR_Master`)

6.1 Overview

`QR_Master` is the EMU-side proxy for the umbilical quick-release actuator that resides on the GSEMU. It drives two MCP23X17 expansion I/O lines:

- `AUX_IO_3` (`QR_CMD_EIO`) — OUTPUT. Level-based command to the GSEMU QR servo.
- `AUX_IO_4` (`RELEASE_STATE_EIO`) — INPUT_PULLUP. Wired to GSEMU chassis GND through the AUX connector. Reads LOW while the umbilical is physically connected; floats HIGH when the connector is removed (separation confirmed).

QR_CMD_EIO Level	Driver	Meaning
HIGH (default)	EMU	Latch engaged — GSEMU servo held at hold position
LOW	EMU	Latch open — GSEMU servo commanded to release position

Warning

Ensure the launch sequence has been verified and all personnel are clear before issuing **QR_RELEASE**. The umbilical disconnection releases pressurised N_2O. Calling `hold()` after `release()` returns the CMD line HIGH but cannot re-engage a latch that has already opened mechanically.

7 Buzzer and Visual Indicator

7.1 Startup Self-Test

At power-on, the buzzer fires **five short beeps** (75 ms on / 75 ms gap) to confirm the buzzer and relay circuits are functional. The NeoPixel cycles red → yellow → green → off as a pixel self-test.

7.2 NeoPixel Indicator State Machine

`Check_Indicator_And_Buzzer()` runs every loop iteration and updates the 32-pixel NeoPixel array to reflect the highest-priority active condition. States are evaluated in descending priority:

Priority	Condition	Pattern	Colour
1	`engine_running` = true	Off (all pixels dark)	—
2	`emu_state` = ENGINE_STARTING	Solid	Red
3	`tank_pressurized` = true	Flash 300/500 ms	Red
4	`link_connected` = true	Flash 300/1200 ms	Green
5	(unlinked)	Flash 300/1200 ms	Yellow

`link_connected` is set true on every received **HEARTBEAT** and cleared after 15 s of silence (loss-of-signal watchdog). `tank_pressurized` is updated by `Check_Pressure_Recording()` using the live tank pressure reading; the threshold is > `PRESSURE_WARNING_THRESHOLD` (15 PSI).

7.3 Buzzer Behaviour

Condition	Buzzer Action
Startup self-test	5 beeps (75 ms on, 75 ms gap) — blocking, in `setup()`
Button press confirmation	1 or 2 short beeps (100 ms) via `Beep()`
Pressure alarm	**Continuous tone** while tank_pressurized = true
Engine start / abort	Alarm silenced immediately when `Arm_Engine_Start()` or `Execute_Abort()` is called
"I'm alive" heartbeat	Single 100 ms beep every 10 s; suppressed during alarm, ENGINE_STARTING, and ENGINE_RUNNING

The pressure alarm is managed entirely within `Check_Indicator_And_Buzzer()`. When the indicator state transitions *to* `IND_PRESSURIZED`, `Buzzer.on()` is called (no timeout — continuous). When the state transitions *away* from `IND_PRESSURIZED`, `Buzzer.off()` is called. `Arm_Engine_Start()` and `Execute_Abort()` both call `Buzzer.off()` directly and clear the `pressure_alarm_active` flag so the next `Check_Indicator_And_Buzzer()` call does not re-arm it.

7.4 NeoPixel_Indicator API

Method	Action
`begin()`	Initialise hardware; clear all pixels
`on(color)`	Set all pixels solid; cancel any flash or timed mode
`onRed()` / `onGreen()` / `onYellow()`	Convenience wrappers
`onForTime(color, ms)`	Solid for `ms` milliseconds; then off
`flash(color, on_ms, off_ms)`	Periodic flash indefinitely; cancelled by `on()` or `off()`
`stopFlash()`	Stop flashing; turn off
`off()` / `clear()`	All pixels off; cancel flash/timed modes
`update()`	Service timed shutoff and flash state machine — call from loop()

8 Sensor Subsystems

Sensor	Class	ADC / Bus	Measurement
Chamber pressure transducer	`Pressure_Transducer`	ADS1015 ch1	Combustion chamber pres
Tank pressure transducer	`Pressure_Transducer`	ADS1015 ch2	N_2O tank pressure, 0–100
Battery voltage	—	ADS1015 ch3	LiPo pack voltage (via res
Tank temperature sensor	`Temperature_Transducer`	Onboard ADC (A0)	N_2O tank temperature[†]
Chamber temperature sensor	`Temperature_Transducer`	Onboard ADC (A5)	Chamber wall temperatur
Thermocouple 1	`MAX31856`	SPI	TC1 (location TBD)
Thermocouple 2	`MAX31856`	SPI	TC2 (location TBD)

[†]Onboard ADC channel assignments are placeholders pending hardware schematic confirmation.

8.1 Pressure Transducer Signal Chain

Each pressure transducer produces a ratiometric voltage output over 0.5–4.5 V corresponding to 0–full-scale PSI. A voltage divider on the A/D daughter board scales this to the ADS1015 input range:

$$V_{\text{ADC}} = V_{\text{transducer}} \times \frac{3.3}{4.5}$$

Condition	Transducer (V)	After divider (V)	ADS1015 count (GAIN_ONE)
0 PSI (zero offset)	0.500	0.367	≈ **184**
Full-scale PSI	4.500	3.300	≈ **1657**

ADS1015 at `GAIN_ONE` (±4.096 V): ≈0.001991 V/count. The two-point linear `map()` in `Pressure_Sensor_Average()` implicitly performs all three conversion steps (undo divider, subtract 0.5 V offset, scale 0–4 V to PSI) without explicit voltage arithmetic.

Constant	Value	Meaning
`PRESSURE_MIN_READING`	184	ADS1015 counts at 0 PSI (0.500 V transducer)
`PRESSURE_MAX_READING`	1657	ADS1015 counts at full-scale PSI (4.500 V transducer)
`CHAMBER_MAX_PSI`	200	Chamber transducer full-scale (PSI)
`TANK_MAX_PSI`	1000	Tank transducer full-scale (PSI)

8.2 Continuous Pressure Recording

Continuous recording is started automatically by **`BEGIN_FILL`** and may also be started manually with **`START_PRESSURE_RECORDING`**. Every `PRESSURE_RECORDING_INTERVAL_MS` (250 ms) the EMU reads tank pressure, chamber pressure, tank temperature, and chamber temperature and appends all four values to the SD log.

Recording auto-stops when the tank pressure remains below `PRESSURE_AMBIENT_THRESHOLD` (10 PSI) for four consecutive readings, or when **`STOP_PRESSURE_RECORDING`** or **`RESET`** is received.

9 SD Logging

Log files are stored in `EMU_Logs/Log_N.txt`. Each record is time-stamped (PCF8523) and records command receipt, valve movements, sensor readings, and fault events.

10 Version History

Version	Date	Notes
0.1	March 2026	Initial release.
0.2	March 2026	Add umbilical QR release subsystem (QR_Master, QR_RELEASE command, AUX_
0.3	March 2026	Level-based QR protocol (release=LOW, hold=HIGH); add RELEASE_STATE_EI
0.4	March 2026	Full command dispatch table; ENGINE_STARTING state added to state machine; 7
0.5	March 2026	Valve servo calibration: added §3 servo geometry subsection (gear ratio 3.75:1, 1100