Remote Control Unit (RCU)

Hardware and Software Reference

Ken Overton

KJO Liquid Rocket Motor Control System

Version: 0.3
Date: March 2026

This document describes the hardware, software architecture, operator interface, and control flow of the Remote Control Unit. The RCU is the sole operator interface to the KJO liquid rocket motor control system.

© 2025–2026 Ken Overton. All rights reserved.

Contents

1 Hardware Overview **2**
1.1 Component Summary . . . 2
1.2 Pin Assignments . . . 2
1.3 Hardware Block Diagram . . . 2

2 Software Architecture **2**
2.1 Module Summary . . . 3
2.2 Main Loop Control Flow . . . 3

3 Operator Interface (GUI) **3**
3.1 Button Layout and Behaviour . . . 3
3.2 Valve Status Indicators . . . 4
3.3 Status Panels . . . 4

4 Engine Start Confirmation Dialog **4**

5 Pressure Warning **5**

6 Radio Command Dispatch **5**
6.1 Command Reference . . . 5

7 SD Logging **5**

8 Version History **6**

1 Hardware Overview

1.1 Component Summary

Component	Part	Interface
Microcontroller	Adafruit Feather M0 (ATSAMD21G18A, 48 MHz)	—
Display	Adafruit 3.5" TFT V2 (HX8357D, 480×320)	SPI
Touchscreen	TSC2007 resistive controller	I^2C (0x48)
LoRa Radio	HopeRF RFM95W (Semtech SX1276), 915 MHz	SPI
Real-Time Clock	DS3231 (provides temperature also)	I^2C
SD Card	On Adafruit 3.5" TFT shield	SPI
Battery	3.7 V LiPo; voltage divider on A7	ADC A7

1.2 Pin Assignments

Signal	Pin	Notes
`SCREEN_CS`	11	TFT chip select
`SCREEN_DC`	10	TFT data/command
`SD_CS`	5	SD card chip select
`STMPE_CS`	6	Touch controller CS (also TOUCH_IRQ)
`RFM95_CS`	8	Radio chip select
`RFM95_RST`	4	Radio reset
`RFM95_INT`	3	Radio IRQ
`BAT_SENSE`	A7	Battery voltage (2:1 divider)

1.3 Hardware Block Diagram

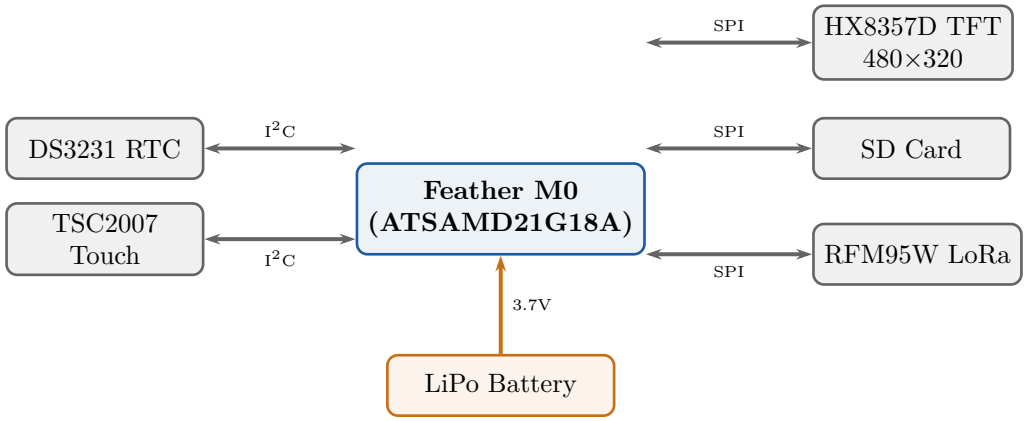

Figure 1: RCU hardware block diagram.

2 Software Architecture

2.1 Module Summary

Module	Location	Responsibility
`main.cpp`	local	Setup, loop, command dispatch, GUI logic
`KJO_RCU_Display`	shared	TFT GUI: buttons, valve symbols, status panels
`KJO_Radio`	shared	Radio pin constants, frequency, power
`KJO_Command_Defs`	shared	Command codes, packet struct definitions
`KJO_System_Config`	shared	Version string, platform identifier

2.2 Main Loop Control Flow

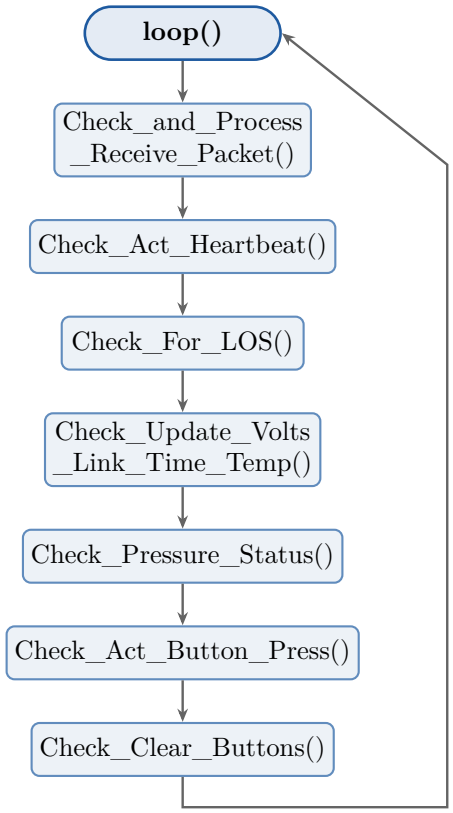

Figure 2: RCU main loop control flow.

3 Operator Interface (GUI)

3.1 Button Layout and Behaviour

Six buttons are arranged in a 2×3 grid on the left side of the screen. Each button sends one or more commands depending on its mode:

Button	Row	Col	Behaviour
Fill	1	1	**Latching toggle.** First press → `BEGIN_FILL` (button stays highlighted). Second press → `STOP_FILL` (button clears).
Dump	1	2	**Latching toggle.** First press → `DUMP` (button stays highlighted). Second press → `STOP_DUMP` (button clears).
Reset	2	1	**Immediate ABORT.** Sends `RESET`; clears all latched button states (Fill, Dump, Enable).
Status	2	2	Sends `RCU_STATUS`; auto-clears after 1 s.
Enable	3	1	**Hold-to-enable LCO.** Press sends `ENABLE_LCO_CONTROL` (param = 1, button highlighted); finger-lift sends `ENABLE_LCO_CONTROL` (param = 0, button clears).
Launch	3	2	**Guarded by confirmation dialog.** Press opens a modal CONFIRM / CANCEL overlay. CONFIRM sends `START_ENGINE`; CANCEL dismisses without sending. See §4.

3.2 Valve Status Indicators

Four valve symbols occupy the right portion of the screen: Fill, N_2O (Ox), Fuel, and Dump. Each symbol uses a circle-and-bar motif: a vertical bar on a green disc indicates open; a horizontal bar on a red disc indicates closed. State is updated from the `HEARTBEAT` response packet.

When the tank pressure exceeds `PRESSURE_IN_SYSTEM_THRESHOLD` (as reported in heartbeat responses), the background of the valve panel turns **red** as a visual pressure warning (see §5).

3.3 Status Panels

- **Battery voltages**: RCU voltage (measured locally on A7); EMU voltage (received in heartbeat).
- **Link status**: LINK_OK / LINK_MARGINAL / LINK_DOWN, with current RSSI value.
- **Time and temperature**: Time from DS3231; temperature converted to °F.
- **Message log**: Scrolling text panel showing last TX/RX events.

4 Engine Start Confirmation Dialog

Pressing the **Launch** button does *not* immediately send `START_ENGINE`. Instead, a modal overlay is drawn over the main screen with two large buttons:

- **CONFIRM** (green) — sends `START_ENGINE` to the EMU and dismisses the overlay.
- **CANCEL** (red) — dismisses the overlay without transmitting any command.

The overlay cannot be dismissed by touching outside of it; only CONFIRM or CANCEL can close it. This prevents an accidental single touch from initiating the ignition sequence.

5 Pressure Warning

`Check_Pressure_Status()` is called every loop iteration. It compares the most recent tank pressure value (carried in the heartbeat response packet's `r_val` field, or from the last **`READ_TANK_PRESSURE`** response) against `PRESSURE_IN_SYSTEM_THRESHOLD`.

When pressure exceeds the threshold:

- The valve symbol panel background is redrawn in **red**.
- A "PRESSURISED" warning label is displayed in the status area.

When pressure returns below the threshold (or a **`RESET`** response is received), the panel background returns to its normal colour and the warning label is cleared.

This visual warning mirrors the EMU-side audible pressure alarm (continuous buzzer on the EMU) so the operator at the RCU can immediately see that the propellant system is under pressure.

6 Radio Command Dispatch

`RCU_Execute_Command(command_ID, p1)` builds and transmits a command packet. **`HEARTBEAT`** uses the `Heartbeat_Command_Packet` structure (6 bytes, includes RCU voltage); all other commands use `Command_Payload` (4 bytes, includes a `short` parameter).

Responses are parsed in `Check_and_Process_Receive_Packet()`. The **`HEARTBEAT`** response is routed to `Process_Heartbeat_Response()`, which updates EMU voltage and all four valve symbols.

6.1 Command Reference

Command	Sent by	Notes
`HEARTBEAT`	Automatic (every 5 s)	RCU voltage in payload; EMU returns all valve posi
`RESET`	Reset button	ABORT; clears all latched button states on RCU
`BEGIN_FILL`	Fill button (1st press)	Starts propellant fill; EMU starts pressure recording
`STOP_FILL`	Fill button (2nd press)	Stops propellant fill; recording continues until ambie
`DUMP`	Dump button (1st press)	Opens Dump valve
`STOP_DUMP`	Dump button (2nd press)	Closes Dump valve
`ENABLE_LCO_CONTROL`	Enable button (hold / release)	param 1 = enable LCO remote start; param 0 = dis
`START_ENGINE`	Launch + CONFIRM	Arms 7-step ignition sequence on EMU
`RCU_STATUS`	Status button	Requests EMU status summary

7 SD Logging

Log files are stored in the root of the SD card as `Log_N.txt` (N is auto-incremented to avoid overwriting existing files). Each entry is time-stamped from the DS3231 and records all TX and RX events in human-readable form, e.g.:

```
10:15:03 [TX] BEGIN_FILL (1) | param: 0
10:15:03 [RX] BEGIN_FILL (1) | status: OK | r_val: 0 | RSSI: -72
```

8 Version History

Version	Date	Notes
0.1	March 2026	Initial release.
0.2	March 2026	Button table updated: FILL and DUMP are latching toggles; Reset is immediate AB
0.3	March 2026	SD log files moved to SD card root (`Log_N.txt`); subdirectory path constant (`LOG_FI`