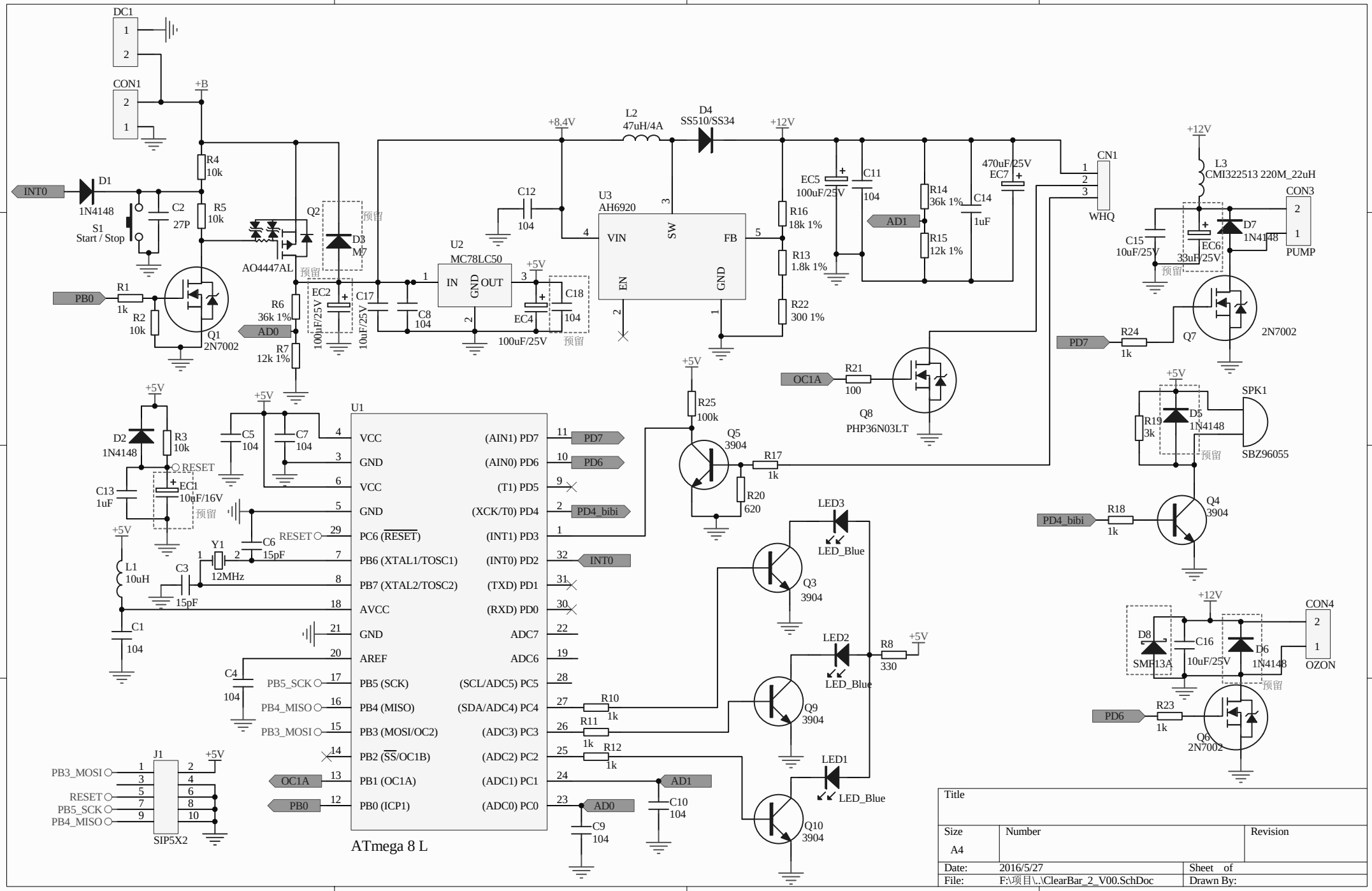
DC1
CON1
+B
INT0
D1
1N4148
S1
Start / Stop
C2
27P
R4
10k
R5
10k
PB0
R1
1k
R2
10k
Q1
2N7002
Q2
AO4447AL
D3
M7
预留
R6
36k 1%
AD0
R7
12k 1%
EC2
100uF/25V
C17
10uF/25V
C8
104
U2
MC78LC50
IN
GND
OUT
+5V
EC4
100uF/25V
C18
104
+8.4V
C12
104
L2
47uH/4A
D4
SS510/SS34
U3
AH6920
VIN
SW
FB
EN
GND
+12V
R16
18k 1%
R13
1.8k 1%
R22
300 1%
EC5
100uF/25V
C11
104
R14
36k 1%
R15
12k 1%
C14
1uF
470uF/25V
EC7
CN1
WHQ
L3
CMI322513 220M_22uH
CON3
PUMP
C15
10uF/25V
EC6
33uF/25V
D7
1N4148
Q7
2N7002
PD7
R24
1k
OC1A
R21
100
Q8
PHP36N03LT
SPK1
SBZ96055
R19
3k
D5
1N4148
Q4
3904
PD4_bibi
R18
1k
D2
1N4148
R3
10k
RESET
C13
1uF
EC1
10uF/16V
C5
104
C7
104
U1
VCC
GND
VCC
GND
PC6 (RESET)
PB6 (XTAL1/TOSC1)
PB7 (XTAL2/TOSC2)
AVCC
GND
AREF
PB5 (SCK)
PB4 (MISO)
PB3 (MOSI/OC2)
PB2 (SS/OC1B)
PB1 (OC1A)
PB0 (ICP1)
(AIN1) PD7
(AIN0) PD6
(T1) PD5
(XCK/T0) PD4
(INT1) PD3
(INT0) PD2
(TXD) PD1
(RXD) PD0
ADC7
ADC6
(SCL/ADC5) PC5
(SDA/ADC4) PC4
(ADC3) PC3
(ADC2) PC2
(ADC1) PC1
(ADC0) PC0
ATmega 8 L
C6
15pF
Y1
12MHz
C3
15pF
L1
10uH
C1
104
C4
104
PB5_SCK
PB4_MISO
PB3_MOSI
J1
SIP5X2
R25
100k
Q5
3904
R17
1k
R20
620
LED3
LED_Blue
Q3
3904
LED2
LED_Blue
R8
330
Q9
3904
LED1
LED_Blue
Q10
3904
R10
1k
R11
1k
R12
1k
C10
104
C9
104
CON4
OZON
D8
SMF13A
C16
10uF/25V
D6
1N4148
R23
1k
Q6
2N7002
Title
Size
A4
Number
Revision
Date:
2016/5/27
Sheet of
File:
F:\项目\..\ClearBar_2_V00.SchDoc
Drawn By: