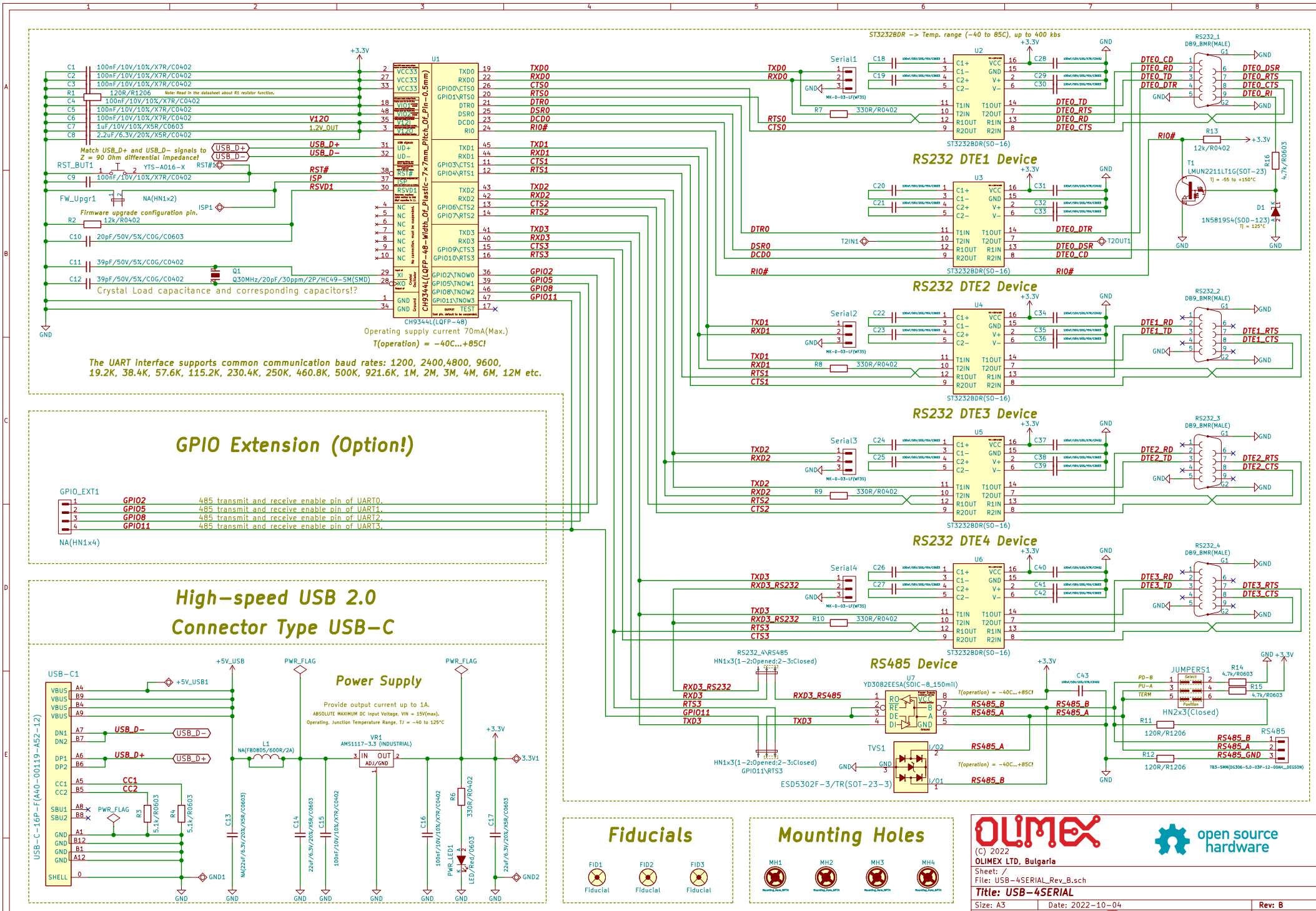
ST3232BDR -> Temp. range (-40 to 85C), up to 400 kbs
RS232 DTE1 Device
RS232 DTE2 Device
RS232 DTE3 Device
RS232 DTE4 Device
RS485 Device
GPIO Extension (Option!)
High-speed USB 2.0
Connector Type USB-C
Power Supply
Provide output current up to 1A.
ABSOLUTE MAXIMUM DC Input Voltage, VIN = 15V(max).
Operating, Junction Temperature Range, TJ = -40 to 125°C
Match USB_D+ and USB_D- signals to Z = 90 Ohm differential impedance!
Firmware upgrade configuration pin.
Crystal Load capacitance and corresponding capacitors!?
Operating supply current 70mA(Max.)
T(operation) = -40C...+85C!
The UART interface supports common communication baud rates: 1200, 2400,4800, 9600, 19.2K, 38.4K, 57.6K, 115.2K, 230.4K, 250K, 460.8K, 500K, 921.6K, 1M, 2M, 3M, 4M, 6M, 12M etc.
485 transmit and receive enable pin of UART0.
485 transmit and receive enable pin of UART1.
485 transmit and receive enable pin of UART2.
485 transmit and receive enable pin of UART3.
Fiducials
Mounting Holes
(C) 2022
OLIMEX LTD, Bulgaria
Sheet: /
File: USB-4SERIAL_Rev_B.sch
Title: USB-4SERIAL
Size: A3
Date: 2022-10-04
Rev: B
KiCad E.D.A. kicad 5.1.6-c6e7f7d87ubuntu18.04.1
Id: 1/1