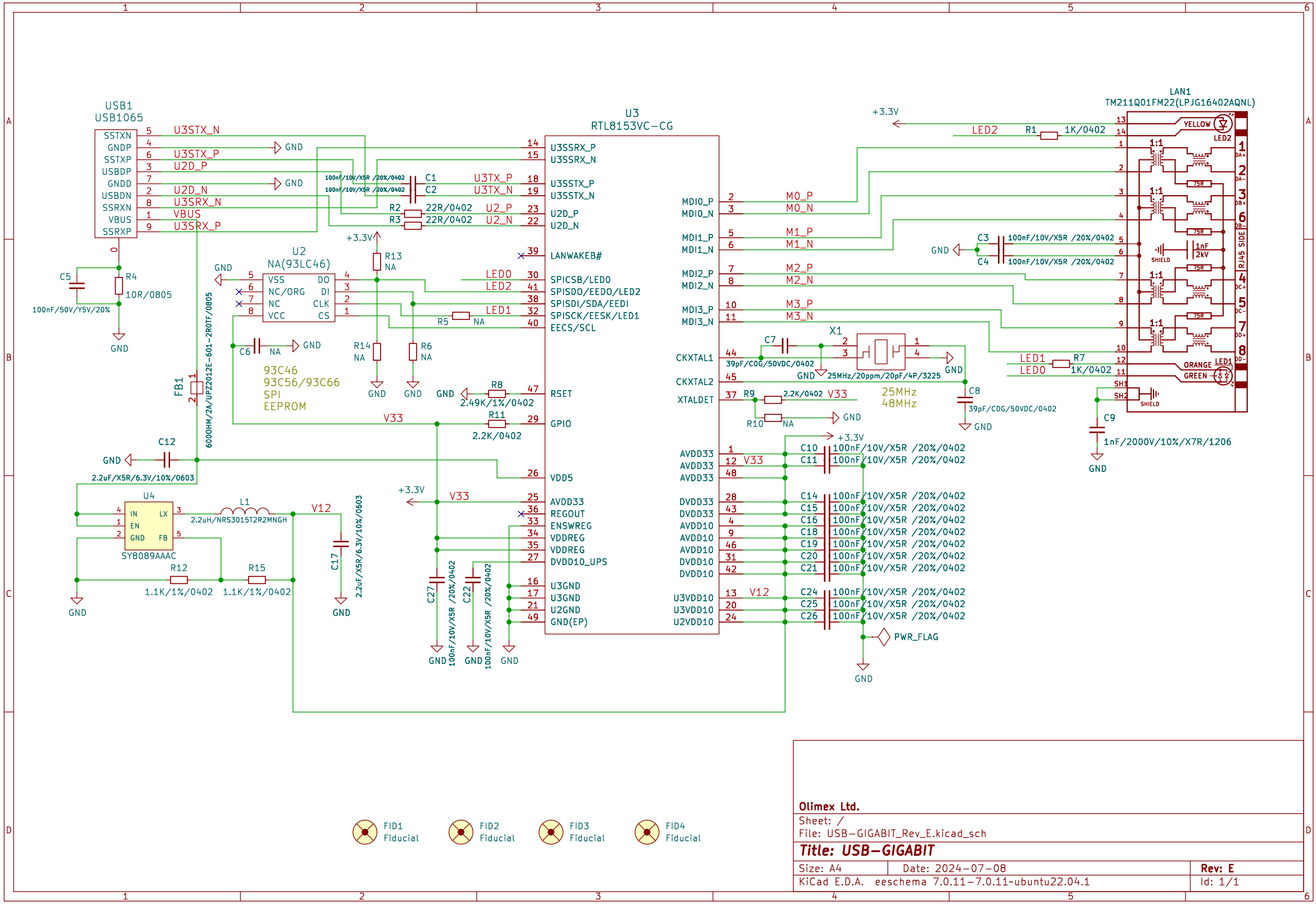


**Olimex Ltd.**

Sheet: /

File: USB-GIGABIT_Rev_E.kicad_sch

**Title: USB-GIGABIT**

| | | |
|---|---|---|
| Size: A4 | Date: 2024-07-08 | Rev: E |
| KiCad E.D.A. eeschema 7.0.11-7.0.11~ubuntu22.04.1 | | Id: 1/1 |