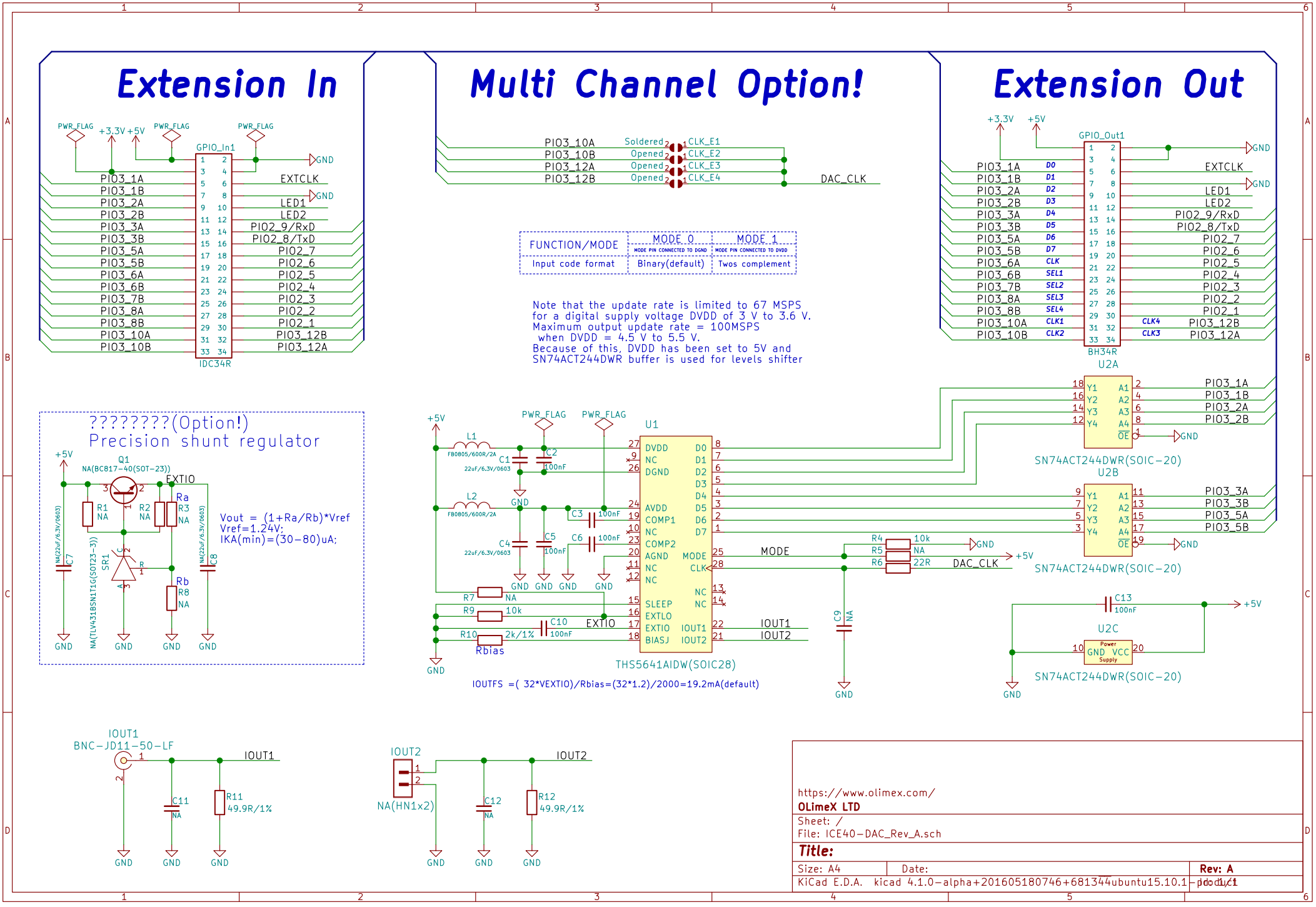
Extension In
Multi Channel Option!
Extension Out
PWR_FLAG
+3.3V
+5V
GPIO_In1
IDC34R
PIO3_1A
PIO3_1B
PIO3_2A
PIO3_2B
PIO3_3A
PIO3_3B
PIO3_5A
PIO3_5B
PIO3_6A
PIO3_6B
PIO3_7B
PIO3_8A
PIO3_8B
PIO3_10A
PIO3_10B
EXTCLK
LED1
LED2
PIO2_9/RxD
PIO2_8/TxD
PIO2_7
PIO2_6
PIO2_5
PIO2_4
PIO2_3
PIO2_2
PIO2_1
PIO3_12B
PIO3_12A
GND
PIO3_10A
PIO3_10B
PIO3_12A
PIO3_12B
Soldered
Opened
CLK_E1
CLK_E2
CLK_E3
CLK_E4
DAC_CLK
FUNCTION/MODE
MODE 0
MODE 1
MODE PIN CONNECTED TO DGND
MODE PIN CONNECTED TO DVDD
Input code format
Binary(default)
Twos complement
Note that the update rate is limited to 67 MSPS
for a digital supply voltage DVDD of 3 V to 3.6 V.
Maximum output update rate = 100MSPS
when DVDD = 4.5 V to 5.5 V.
Because of this, DVDD has been set to 5V and
SN74ACT244DWR buffer is used for levels shifter
GPIO_Out1
BH34R
U2A
SN74ACT244DWR(SOIC-20)
U2B
SN74ACT244DWR(SOIC-20)
U2C
SN74ACT244DWR(SOIC-20)
????????(Option!)
Precision shunt regulator
Q1
NA(BC817-40(SOT-23))
EXTIO
Ra
Rb
R1
R2
R3
R8
NA
SR1
NA(TLV431BSN1T1G(SOT23-3))
C7
C8
NA(22uF/6.3V/0603)
Vout = (1+Ra/Rb)*Vref
Vref=1.24V;
IKA(min)=(30-80)uA;
U1
THS5641AIDW(SOIC28)
DVDD
NC
DGND
AVDD
COMP1
COMP2
AGND
SLEEP
EXTLO
EXTIO
BIASJ
D0
D1
D2
D3
D4
D5
D6
D7
MODE
CLK
IOUT1
IOUT2
L1
L2
FB0805/600R/2A
C1
C2
C3
C4
C5
C6
22uF/6.3V/0603
100nF
R7
R9
R10
10k
2k/1%
Rbias
C10
R4
R5
R6
22R
C9
C13
IOUTFS =(32*VEXTIO)/Rbias=(32*1.2)/2000=19.2mA(default)
IOUT1
BNC-JD11-50-LF
C11
R11
49.9R/1%
IOUT2
NA(HN1x2)
C12
R12
49.9R/1%
https://www.olimex.com/
OLimeX LTD
Sheet: /
File: ICE40-DAC_Rev_A.sch
Title:
Size: A4
Date:
Rev: A
KiCad E.D.A. kicad 4.1.0-alpha+201605180746+681344ubuntu15.10.1-product
Id: 1/1