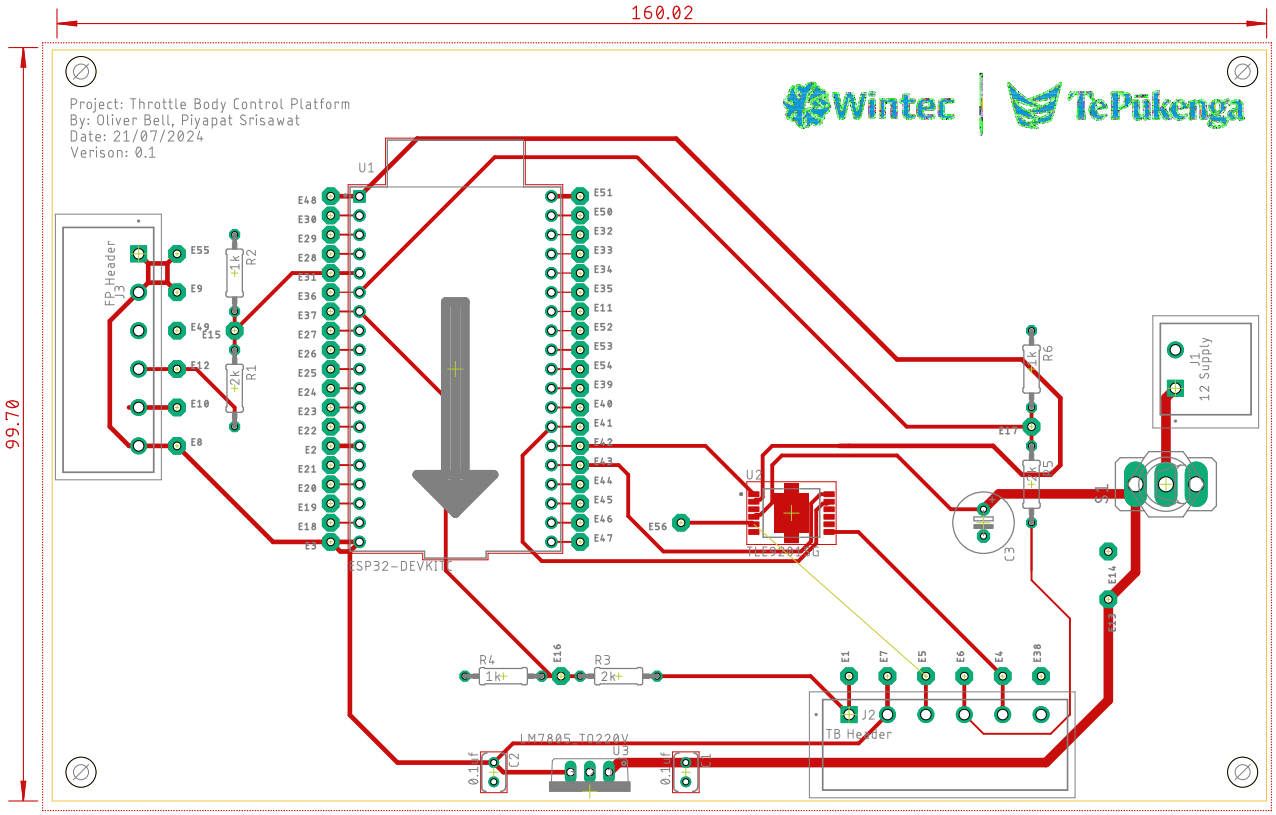

2024-07-20 7:48 PM C:\Users\obell\Documents\GitHub\Throttle_Body_Control_Platform\PCB\EAGLE\projects\TBCP V0.1\Schematic.brd