All rights are reserved. Reproduction in whole or in part is prohibited without the written consent of the copyright owner.

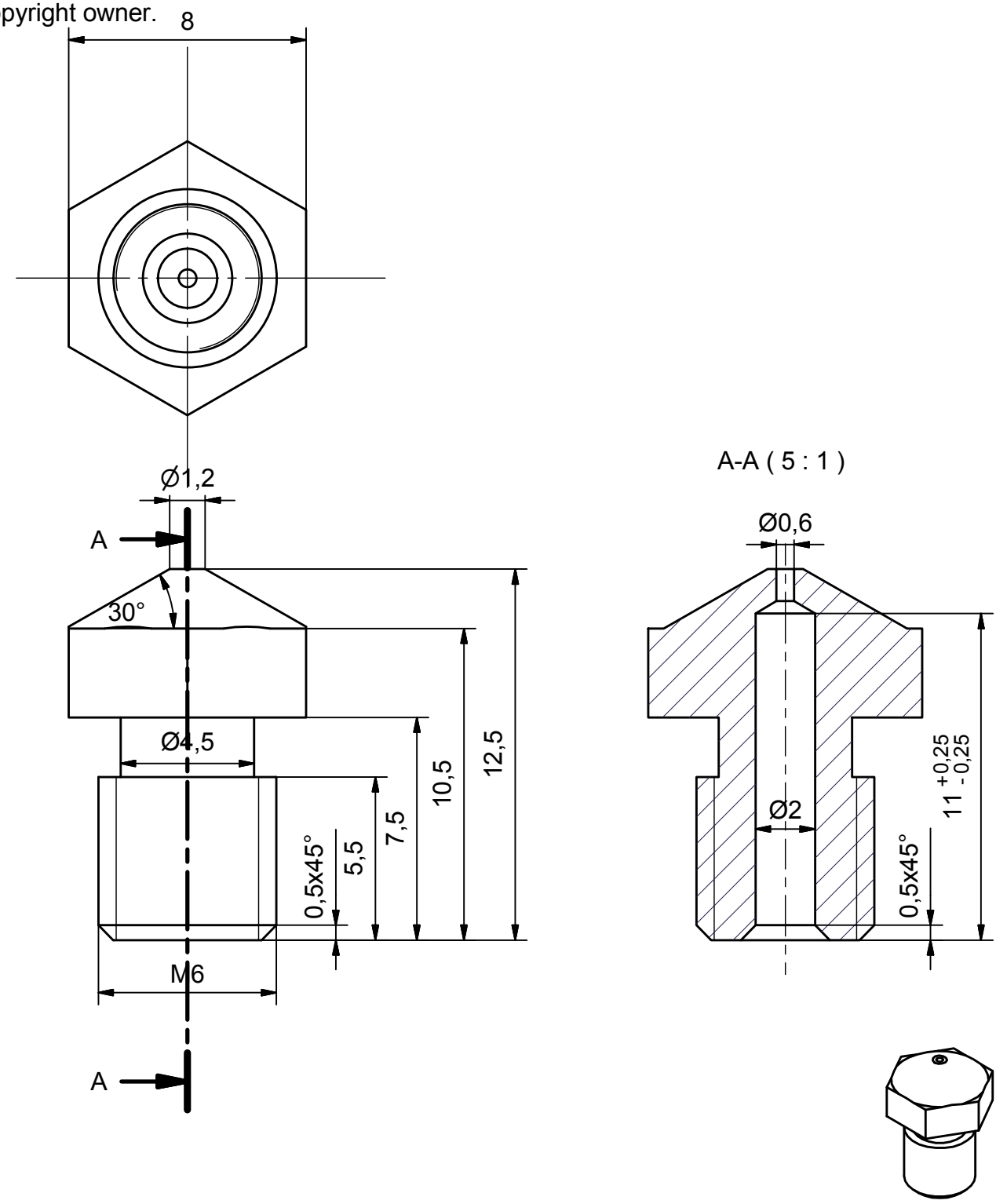

Limit deviations for nominal dimension ranges								
from	to	tolerance	from	to	tolerance	from	to	tolerance
0,5	6	± 0,1	120	400	± 0,5	2000	4000	± 1,5
6	30	± 0,2	400	1000	± 0,8	4000	12000	± 2,0
30	120	± 0,3	1000	2000	± 1,2		angles	± 30'

	Name	Date	Signature		Material	Weight	Price PLN
Made by	Tomasz Tęcza	2013-10-24		**OMNI3D Sp. z o.o.** ul. Marcinkowskiego 26 61-745 Poznań	soft yellow brass	N/A	0
Checked by					Quantity	Sheet format	Sheet
Approved by					1	A4	1 / 1
Nr index:							
Project name:				File:			

Scale:	Part name:	Part nr:
5 : 1	Omni3D-nozzle 0.6 mm	E3D-00-04