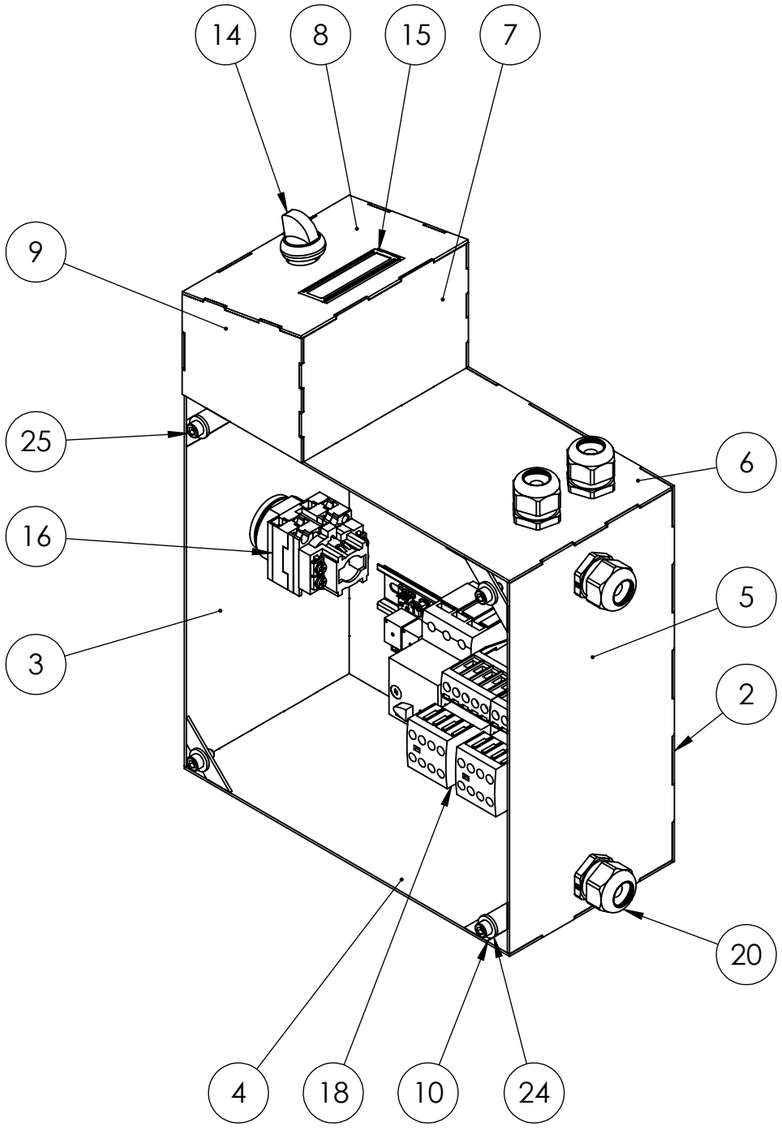

ITEM NO.	PART NUMBER	QTY.
25	DIN 912 M6 x 12 --- 12N	4
24	plain washer 6902 type abc_din	4
23	60155	3
22	SHRPRO-V1 22 DIN rail	2
21	SHRPRO-V1 21 Rail mount terminal block 32A	12
20	SHRPRO-V1 20 Cable gland M25	4
19	SHRPRO-V1 19 5V 500mA power supply	1
18	SHRPRO-V1 18 EATON DILM contactor,4kW 230Vac 1break contact	2
17	SHRPRO-V1 17 Current limit pkzm01-63	1
16	SHRPRO-V1 15 3 phase general switch	1
15	SHRPRO-V1 14 Display 16x02	1
14	SHRPRO-V1 13 3 position toggle switch	1
13	SHRPRO-V1 12 ACS712 30A hall effect sensor module	1
12	SHRPRO-V1 11 5V 2 channels relay module 250VAC	1
11	SHRPRO-V1 10 Arduino Nano	1
10	SHRPRO-V1 1420.10-A Gusset plate	4
9	SHRPRO-V1 1420.09-A Control panel side	1
8	SHRPRO-V1 1420.08-A Control panel plate	1
7	SHRPRO-V1 1420.07-A Control panel back	1
6	SHRPRO-V1 1420.06-A Elec box side_4	1
5	SHRPRO-V1 1420.05-A Elec box side_3	1
4	SHRPRO-V1 1420.04-A Elec box side_2	1
3	SHRPRO-V1 1420.03-A Elec box side_1	1
2	SHRPRO-V1 1420.02-A Elec box back	1
1	SHRPRO-V1 1420.01-A Elec box front	1

Machine Shredder PRO		Description Electronic box assembly			
Projection method: First angle		Release date 07/01/20	Drawing no. SHRPRO-V1 1420.00		Rev. A
General tolerances ISO 2768-c		Doc. type Assembly	Units unless specified mm	Sheet size A3	Scale 1:4	Sheet 1 / 1