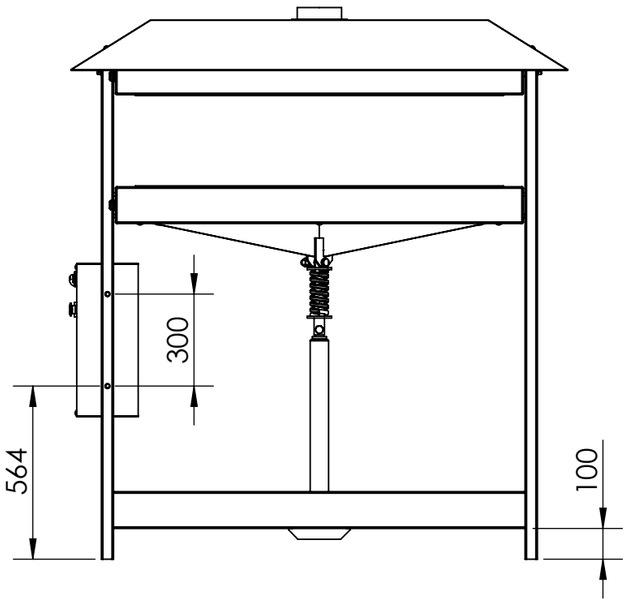

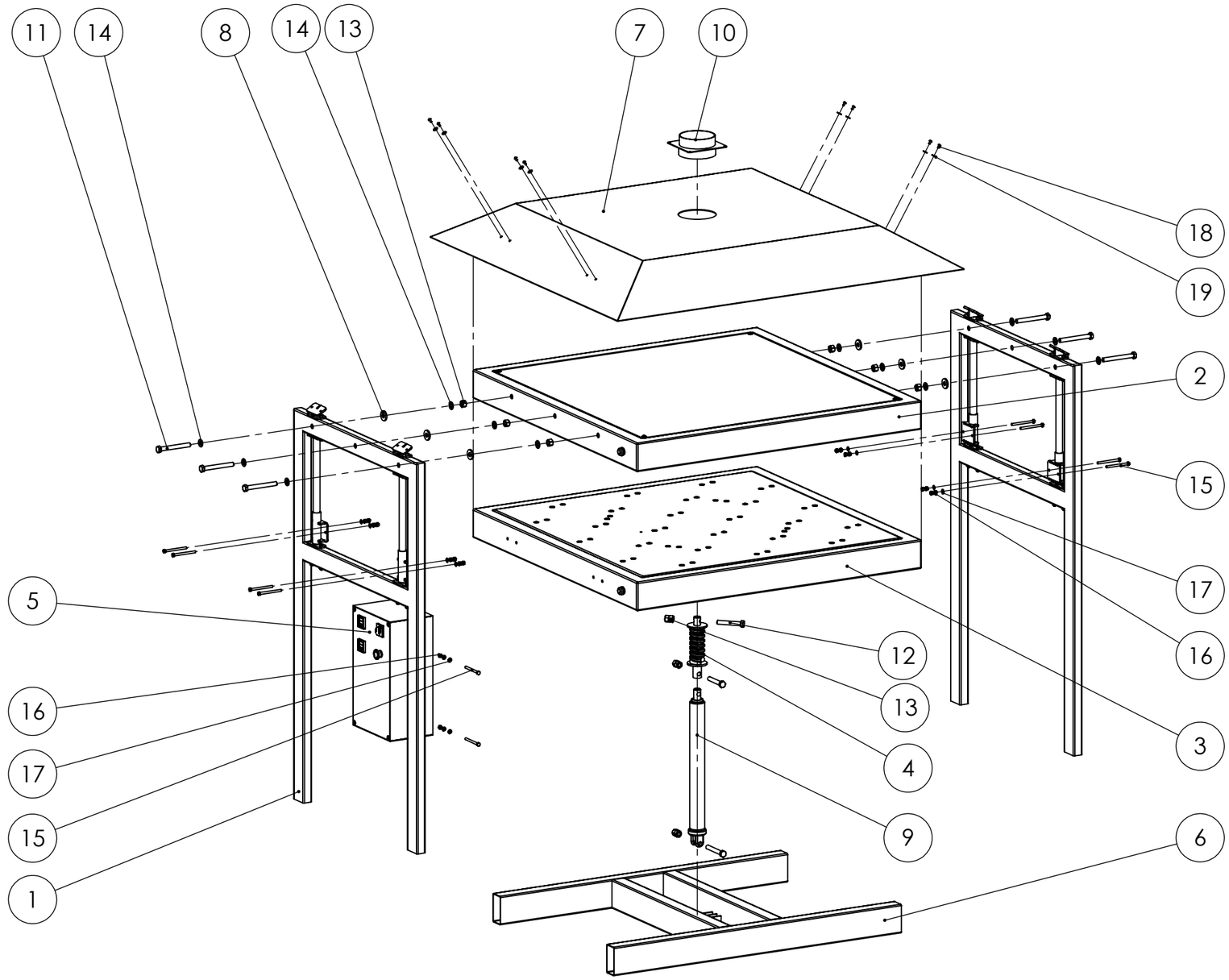

ITEM NO.	QTY	DESCRIPTION	PART NO.
19	8	Flat washer M6	SPR-V1 11
18	8	Socket button head screw M6x12	SPR-V1 10
17	12	Flat washer M8	SPR-V1 09
16	18	Hex nut M8	SPR-V1 08
15	10	Hex bolt M8x100	SPR-V1 07
14	6	Flat washer M16	SPR-V1 06
13	12	Hex nut M16	SPR-V1 05
12	3	Hex bolt M16x120	SPR-V1 04
11	6	Hex bolt M16x140	SPR-V1 03
10	1	Exctraction fitting	SPR-V1 02
9	1	Jack	SPR-V1 01
8	6	Spacer	SPR-V1 0000.03-A
7	1	Hood	SPR-V1 0000.02-A
6	1	Bottom frame	SPR-V1 0000.01-A
5	1	Electronics box asm	SPR-V1 5000.00-A
4	1	Spring asm	SPR-V1 4000.00-A
3	1	Plate frame lower asm	SPR-V1 3000.00-A
2	1	Plate frame upper asm	SPR-V1 2000.00-A
1	2	Side frame asm	SPR-V1 1000.00-A

PRECIOUS PLASTIC	Machine: Sheetpress	Description: Sheetpress assembly			
	Projection method: First angle	Release date: 11/2019	Drawing no.: SPR-V1 0000.00-A		
	General tolerances: ISO 2768-m	Doc. type: Assembly	Units unless specified: mm	Sheet size: A3	Scale: 1:20	Sheet: 1/34