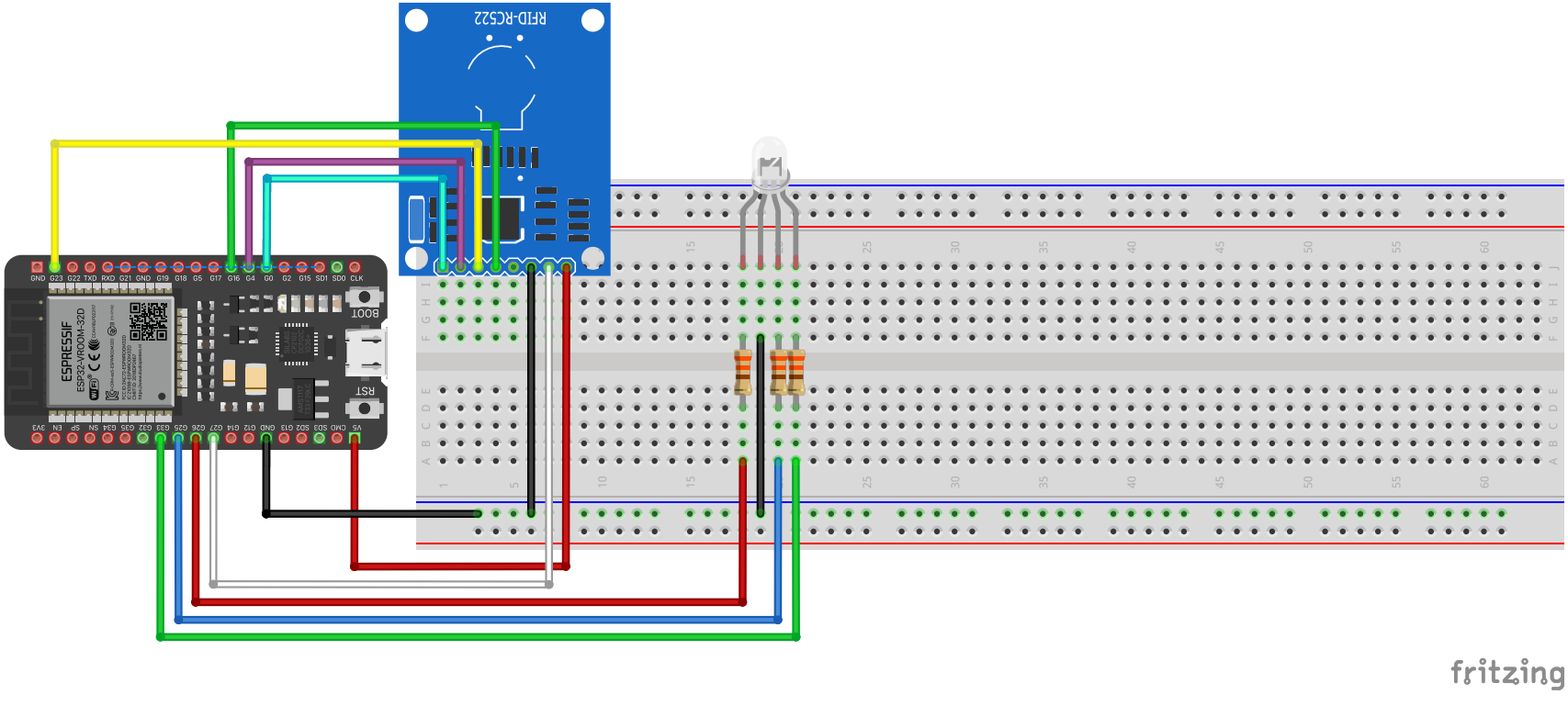
RFID-RC522
ESPRESSIF
ESP32-WROOM-32D
BOOT
RST
fritzing