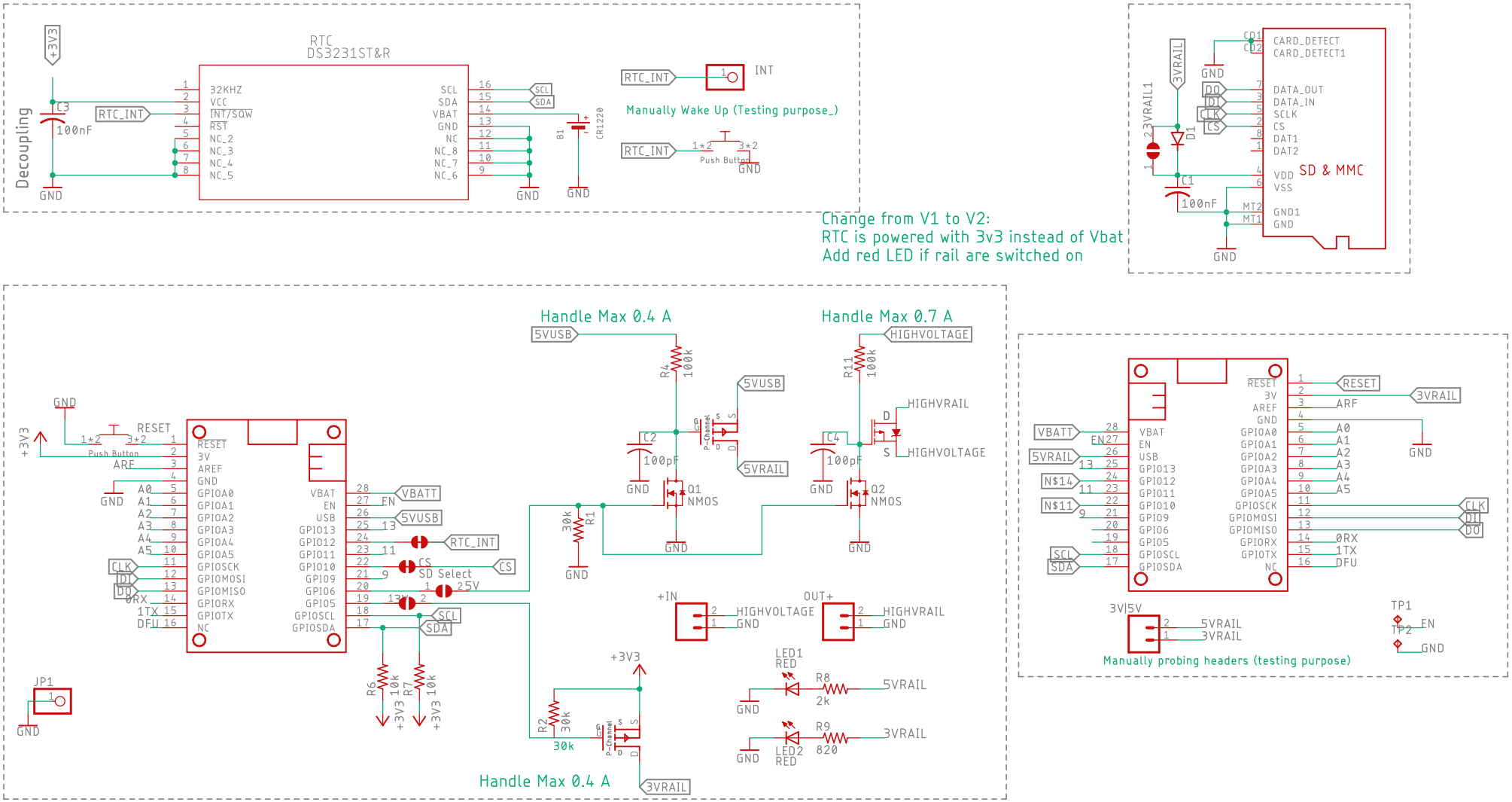
RTC
DS3231ST&R
Decoupling
C3
100nF
RTC_INT
32KHZ
VCC
INT/SQW
RST
NC_2
NC_3
NC_4
NC_5
SCL
SDA
VBAT
GND
NC
NC_8
NC_7
NC_6
B1
CR1220
INT
Manually Wake Up (Testing purpose_)
Push Button
Change from V1 to V2:
RTC is powered with 3v3 instead of Vbat
Add red LED if rail are switched on
SD & MMC
CARD_DETECT
CARD_DETECT1
DATA_OUT
DATA_IN
SCLK
CS
DAT1
DAT2
VDD
VSS
GND1
3VRAIL
3VRAIL1
D1
C1
100nF
Handle Max 0.4 A
Handle Max 0.7 A
5VUSB
HIGHVOLTAGE
HIGHVRAIL
R4
100k
R11
100k
C2
100pF
C4
100pF
Q1
NMOS
Q2
NMOS
R1
30k
R2
30k
R6
10k
R7
10k
+3V3
RESET
ARF
VBATT
EN
SD Select
25V
JP1
+IN
OUT+
LED1
RED
LED2
RED
R8
2k
R9
820
5VRAIL
3V|5V
Manually probing headers (testing purpose)
TP1
TP2