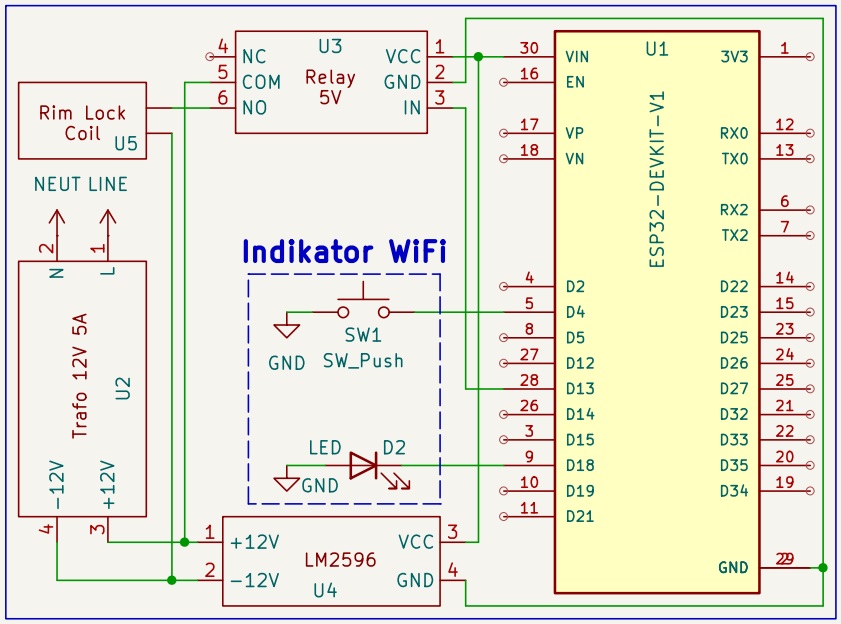

Sheet: /
File: DoorLock.kicad_sch

Title: Door Lock

Size: A5	Date: 2024-03-21	**Rev: v1,0**
KiCad E.D.A. 8.0.1		Id: 2/1