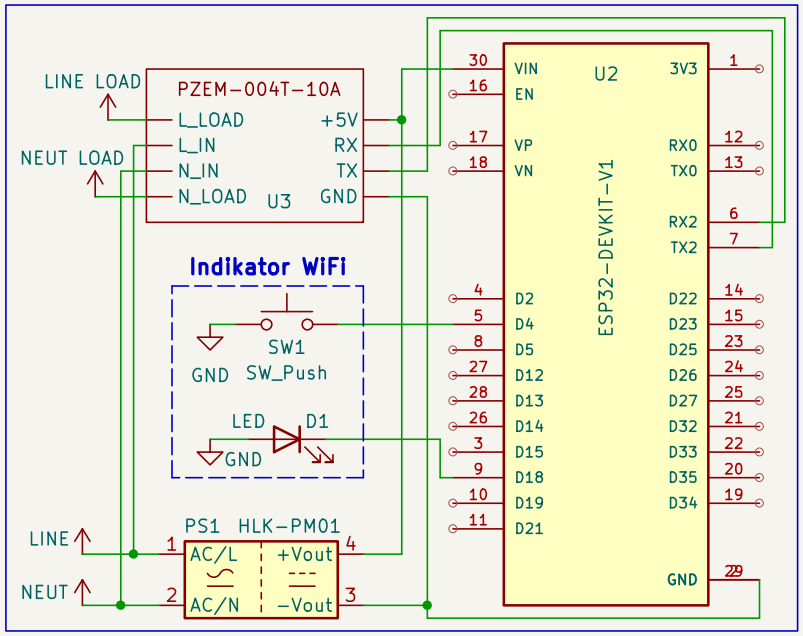

Sheet: /
File: kWhMeter.kicad_sch

Title: kWh Meter

Size: A5	Date:	**Rev: v1.0**
KiCad E.D.A. 8.0.1		Id: 1/1