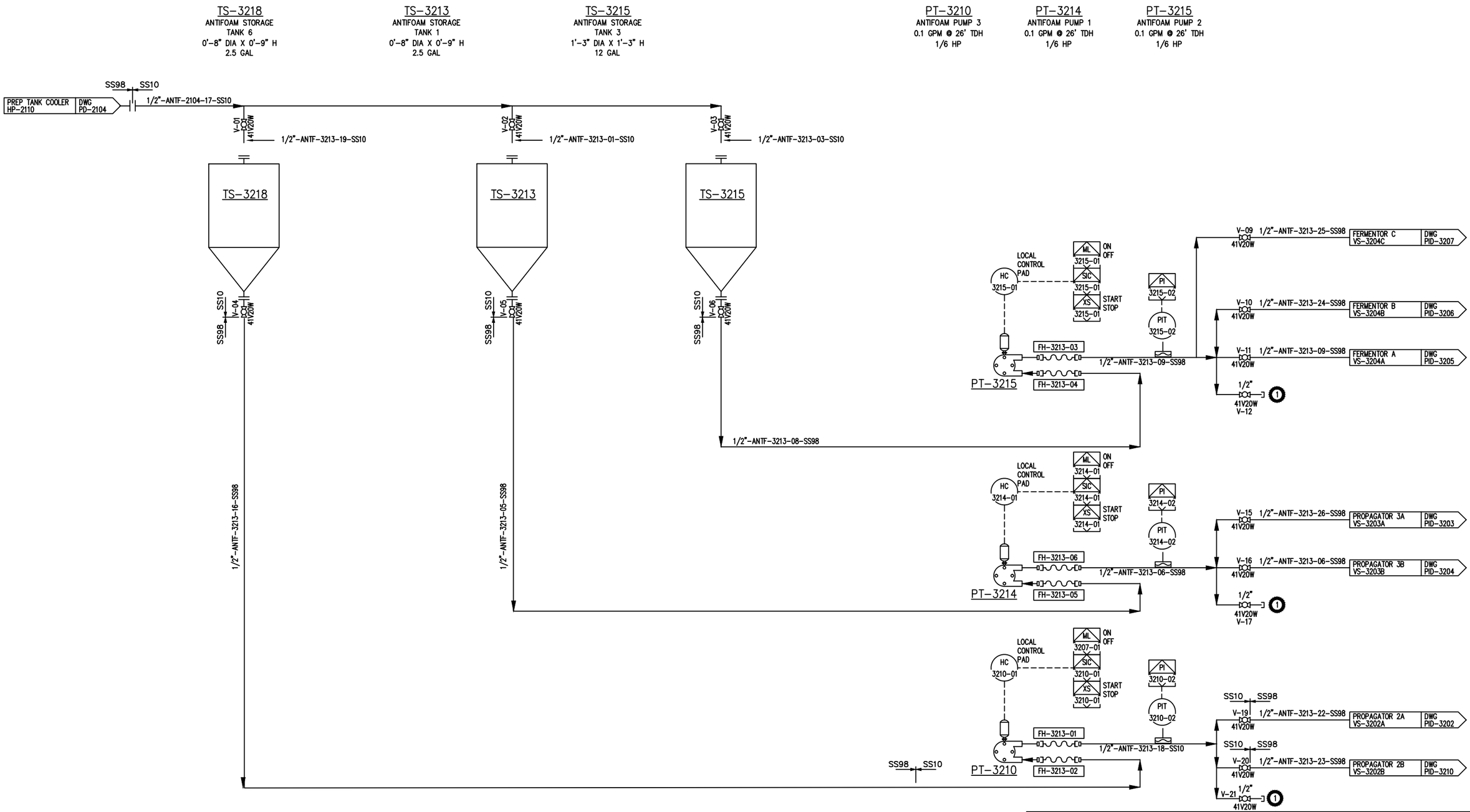

1. CONNECTIONS FOR FUTURE PROPAGATOR 2C, 3C AND FERMENTOR D
2. MANUAL VALVE PREFIX THIS SHEET IS 3213.
3. FIELD TAG = 3213-V-##.
4. HIGHEST MANUAL VALVE NUMBER IS 21.

THE DESIGN IS BASED ON THE EQUIPMENT DATA SHEETS AND SPECIFICATIONS PROVIDED. DESIGN LAYOUTS WERE DEVELOPED USING THE DATA SHEETS, HORSEPOWER AND DIMENSIONAL INFORMATION OBTAINED FROM VENDOR PRELIMINARY INFORMATION AND/OR CATALOGS.

UPON FINAL EQUIPMENT SELECTION AND PURCHASE THE CERTIFIED DIMENSIONAL INFORMATION MUST BE VERIFIED BY THE CONTRACTOR, AND ANY IDENTIFIED DEVIATIONS FROM THE EQUIPMENT DATA SHEETS OR SPECIFICATIONS SHALL BE BROUGHT TO THE OWNER'S ENGINEER FOR RESOLUTION.

THE OWNER'S ENGINEER MUST APPROVE ALL DEVIATIONS FROM THE EQUIPMENT DATA SHEETS AND SPECIFICATIONS PROVIDED.

Ford, Bacon & Davis
A Limited Liability Company
7825 PARK PLACE BLVD.
HOUSTON, TX 77087
COA No. CA-0007835

CONFIDENTIAL
PROPERTY OF THE UNIVERSITY OF FLORIDA. THE FOLLOWING CONTAINS PROPRIETARY INFORMATION THAT THE UNIVERSITY REQUESTS NOT BE RELEASED TO PERSONS NOT DIRECTLY RELATED TO THE PROJECT.

THIS DRAWING IN DESIGN AND DETAIL IS THE PROPERTY OF THE UNIVERSITY AND IS PROVIDED IN STRICT CONFIDENCE WITH THE UNDERSTANDING THAT IT WILL NOT BE USED FOR ANY PURPOSE EXCEPT FOR WHICH IT IS PROVIDED. THIS DRAWING MAY NOT BE REPRODUCED WITHOUT EXPRESS WRITTEN CONSENT OF THE UNIVERSITY OF FLORIDA AND SHALL BE IMMEDIATELY RETURNED ON DEMAND.

REV	DATE	BY	CK	APP	DESCRIPTION
6	04/11/15	KFW	IUN		CHANGED LINE TERMINALS
5	12/05/12	JT	TPK	DCG	ISSUED FOR RECORD
4	01/06/12	JT	TPK	DCG	UPDATED AS NOTED
3	11/18/11	JT	TPK	DCG	ADDED UNIQUE MANUAL VALVE TAGS
2	03/29/11	CC	TPK	DCG	CHANGES PER FO-09
1	11/30/10	JT	TPK	DCG	UPDATED AS NOTED
0	07/30/10	KRS	TPK	DCG	ISSUED FOR CONSTRUCTION

UF UNIVERSITY of FLORIDA
1 BUCKEYE DRIVE PERRY, FL 32348-7702

UNIVERSITY OF FLORIDA
BIOREFINERY PILOT PLANT

PROCESS & INSTRUMENTATION DIAGRAM
ANTIFOAM STORAGE & TRANSFER

PROJ: Y7275
SCALE: NONE
DATE: 05/04/10
BY: JT

PIL-PID-3213

REV. 5