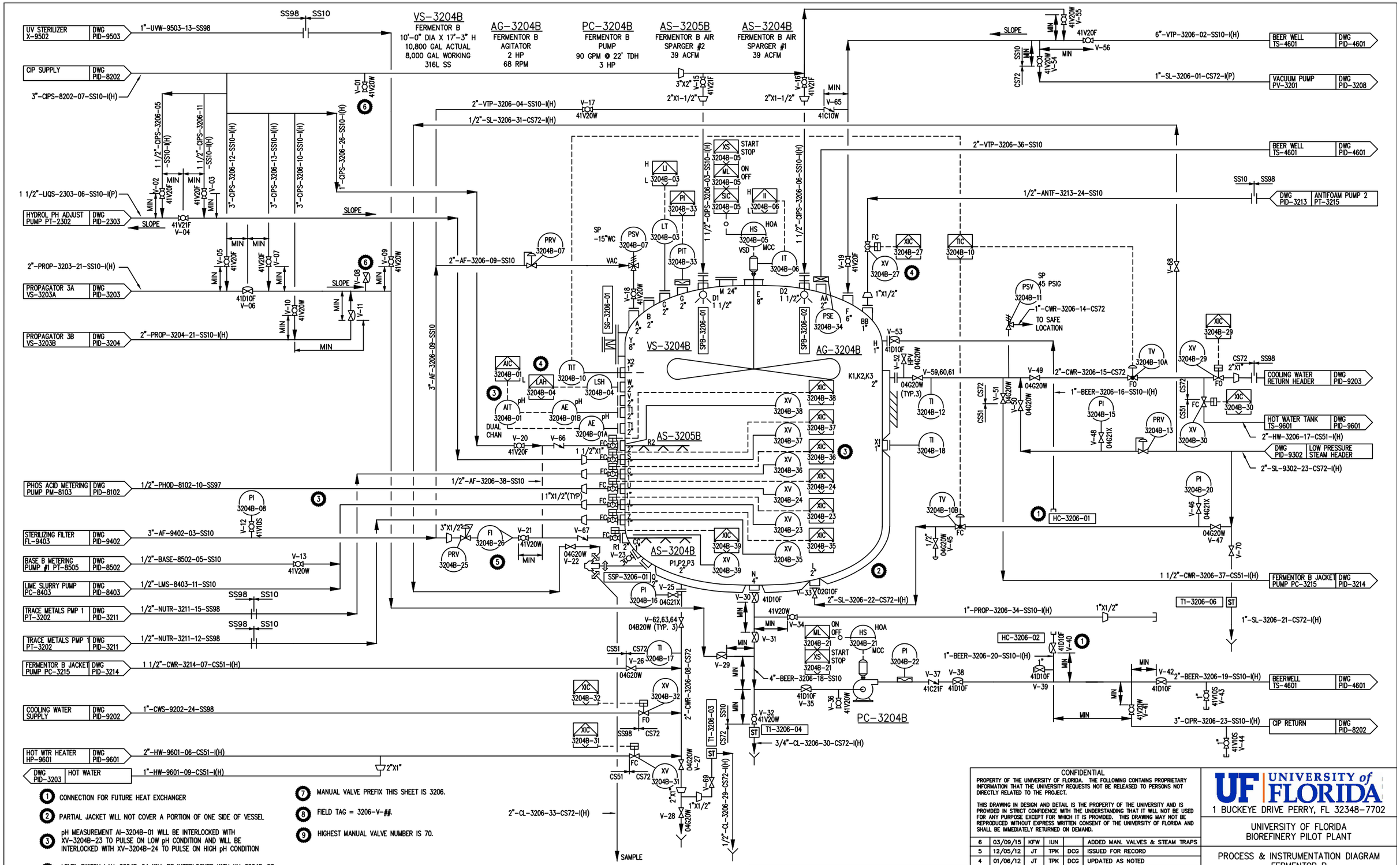

1. CONNECTION FOR FUTURE HEAT EXCHANGER
2. PARTIAL JACKET WILL NOT COVER A PORTION OF ONE SIDE OF VESSEL
3. pH MEASUREMENT AI-3204B-01 WILL BE INTERLOCKED WITH XV-3204B-23 TO PULSE ON LOW pH CONDITION AND WILL BE INTERLOCKED WITH XV-3204B-24 TO PULSE ON HIGH pH CONDITION
4. LEVEL SWITCH LAH-3204B-04 WILL BE INTERLOCKED WITH XV-3204B-27 TO PULSE ON HIGH LEVEL CONDITION
5. ROTAMETER WITH FLOW CONTROL
6. CONNECTIONS FOR FUTURE PROPAGATOR 3C
7. MANUAL VALVE PREFIX THIS SHEET IS 3206.
8. FIELD TAG = 3206-V-##.
9. HIGHEST MANUAL VALVE NUMBER IS 70.

THE DESIGN IS BASED ON THE EQUIPMENT DATA SHEETS AND SPECIFICATIONS PROVIDED. DESIGN LAYOUTS WERE DEVELOPED USING THE DATA SHEETS, HORSEPOWER AND DIMENSIONAL INFORMATION OBTAINED FROM VENDOR PRELIMINARY INFORMATION AND/OR CATALOGS.

UPON FINAL EQUIPMENT SELECTION AND PURCHASE THE CERTIFIED DIMENSIONAL INFORMATION MUST BE VERIFIED BY THE CONTRACTOR, AND ANY IDENTIFIED DEVIATIONS FROM THE EQUIPMENT DATA SHEETS OR SPECIFICATIONS SHALL BE BROUGHT TO THE OWNER'S ENGINEER FOR RESOLUTION.

THE OWNER'S ENGINEER MUST APPROVE ALL DEVIATIONS FROM THE EQUIPMENT DATA SHEETS AND SPECIFICATIONS PROVIDED.

Ford, Bacon & Davis
A Limited Liability Company
7825 PARK PLACE BLVD.
HOUSTON, TX 77087
COA No. CA-0007635

CONFIDENTIAL
PROPERTY OF THE UNIVERSITY OF FLORIDA. THE FOLLOWING CONTAINS PROPRIETARY INFORMATION THAT THE UNIVERSITY REQUESTS NOT BE RELEASED TO PERSONS NOT DIRECTLY RELATED TO THE PROJECT.

THIS DRAWING IN DESIGN AND DETAIL IS THE PROPERTY OF THE UNIVERSITY AND IS PROVIDED IN STRICT CONFIDENCE WITH THE UNDERSTANDING THAT IT WILL NOT BE USED FOR ANY PURPOSE EXCEPT FOR WHICH IT IS PROVIDED. THIS DRAWING MAY NOT BE REPRODUCED WITHOUT EXPRESS WRITTEN CONSENT OF THE UNIVERSITY OF FLORIDA AND SHALL BE IMMEDIATELY RETURNED ON DEMAND.

REV	DATE	BY	CK	APP	DESCRIPTION
6	03/09/15	KFW	IUN		ADDED MAN. VALVES & STEAM TRAPS
5	12/05/12	JT	TPK	DCG	ISSUED FOR RECORD
4	01/06/12	JT	TPK	DCG	UPDATED AS NOTED
3	11/18/11	JT	TPK	DCG	ADDED UNIQUE MANUAL VALVE TAGS
2	03/29/11	CC	TPK	DCG	CHANGES PER FO-09, CHANGED LINE NUMBERS, SIZES & PUMP SPEC
1	11/30/10	JT	TPK	DCG	UPDATED AS NOTED

UF UNIVERSITY of FLORIDA
1 BUCKEYE DRIVE PERRY, FL 32348-7702

UNIVERSITY OF FLORIDA
BIOREFINERY PILOT PLANT

PROCESS & INSTRUMENTATION DIAGRAM
FERMENTOR B

PROJ: Y7275
SCALE: NONE
DATE: 01/13/10
BY: SM

PIL-PID-3206

REV. 5