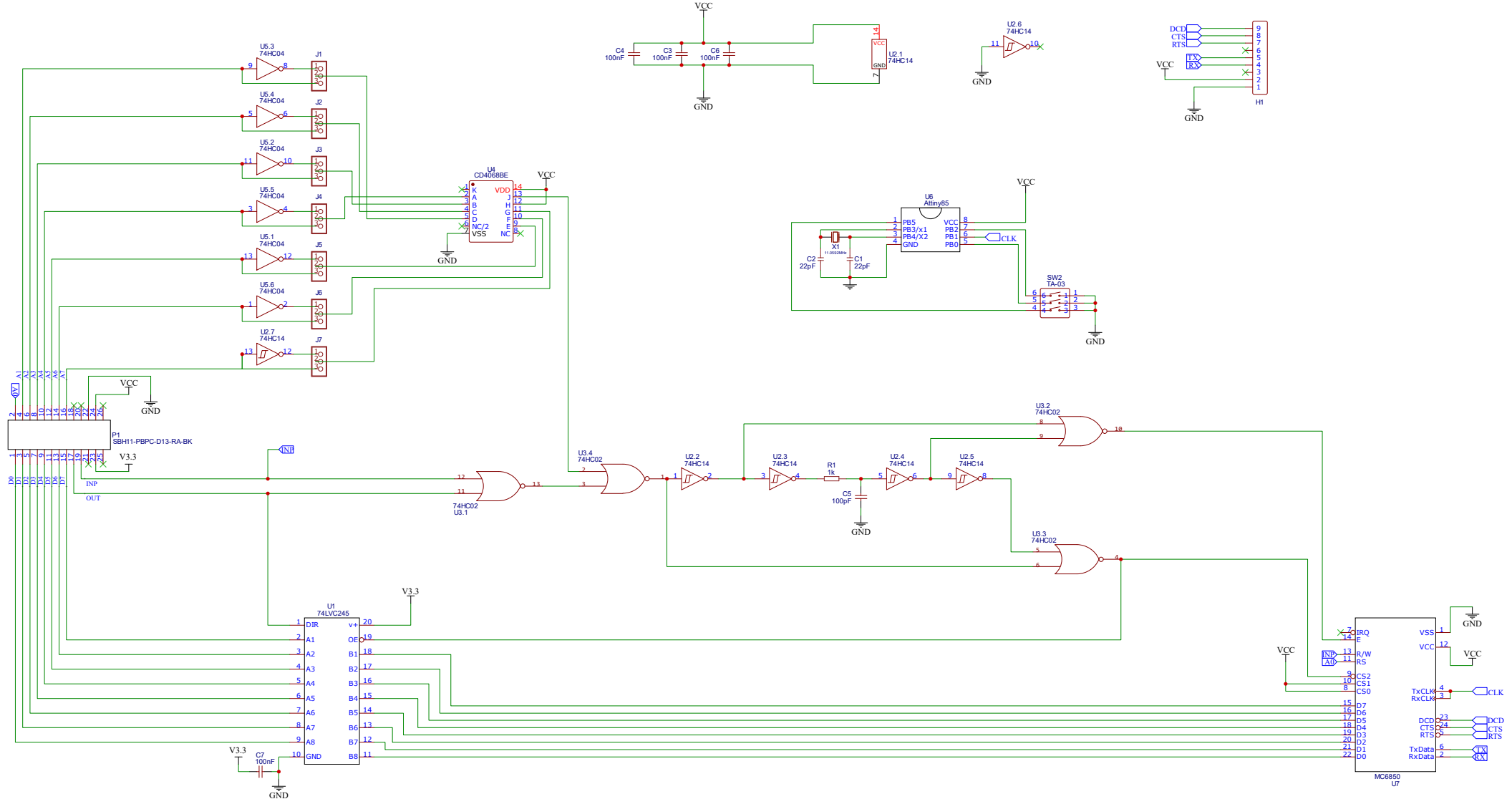
VCC
C4
100nF
C3
100nF
C6
100nF
GND
U2.1
74HC14
U2.6
74HC14
DCD
CTS
RTS
TX
RX
H1
U5.3
74HC04
U5.4
74HC04
U5.2
74HC04
U5.5
74HC04
U5.1
74HC04
U5.6
74HC04
U2.7
74HC14
J1
J2
J3
J4
J5
J6
J7
U4
CD4068BE
VDD
VSS
U6
Attiny85
PB5
PB3/x1
PB4/X2
PB0
CLK
X1
C2
22pF
C1
22pF
SW2
TA-03
P1
SBH11-PBPC-D13-RA-BK
V3.3
INP
OUT
74HC02
U3.1
U3.4
74HC02
U2.2
74HC14
U2.3
74HC14
R1
1k
C5
100pF
U2.4
74HC14
U2.5
74HC14
U3.2
74HC02
U3.3
74HC02
U1
74LVC245
DIR
A1
A2
A3
A4
A5
A6
A7
A8
GND
v+
OE
B1
B2
B3
B4
B5
B6
B7
B8
C7
100nF
MC6850
U7
IRQ
E
R/W
RS
CS2
CS1
CS0
D7
D6
D5
D4
D3
D2
D1
D0
VSS
VCC
TxCLK
RxCLK
DCD
CTS
RTS
TxData
RxData
A0