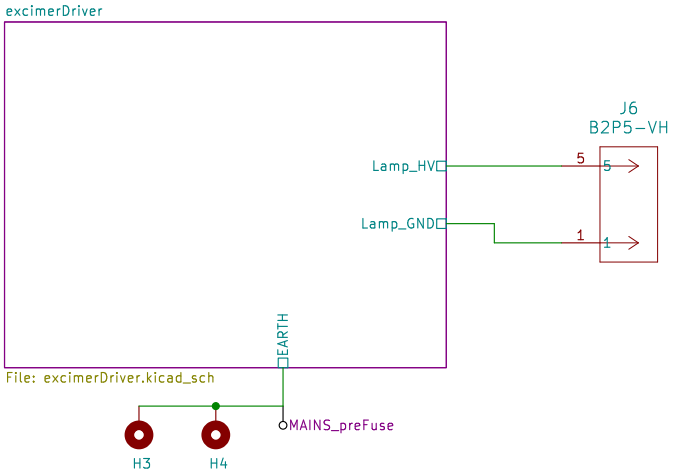

Sheet: /
File: OSLUV.kicad_sch

Title:

Size: A4	Date:	**Rev:**
KiCad E.D.A. 9.0.7		Id: 1/4

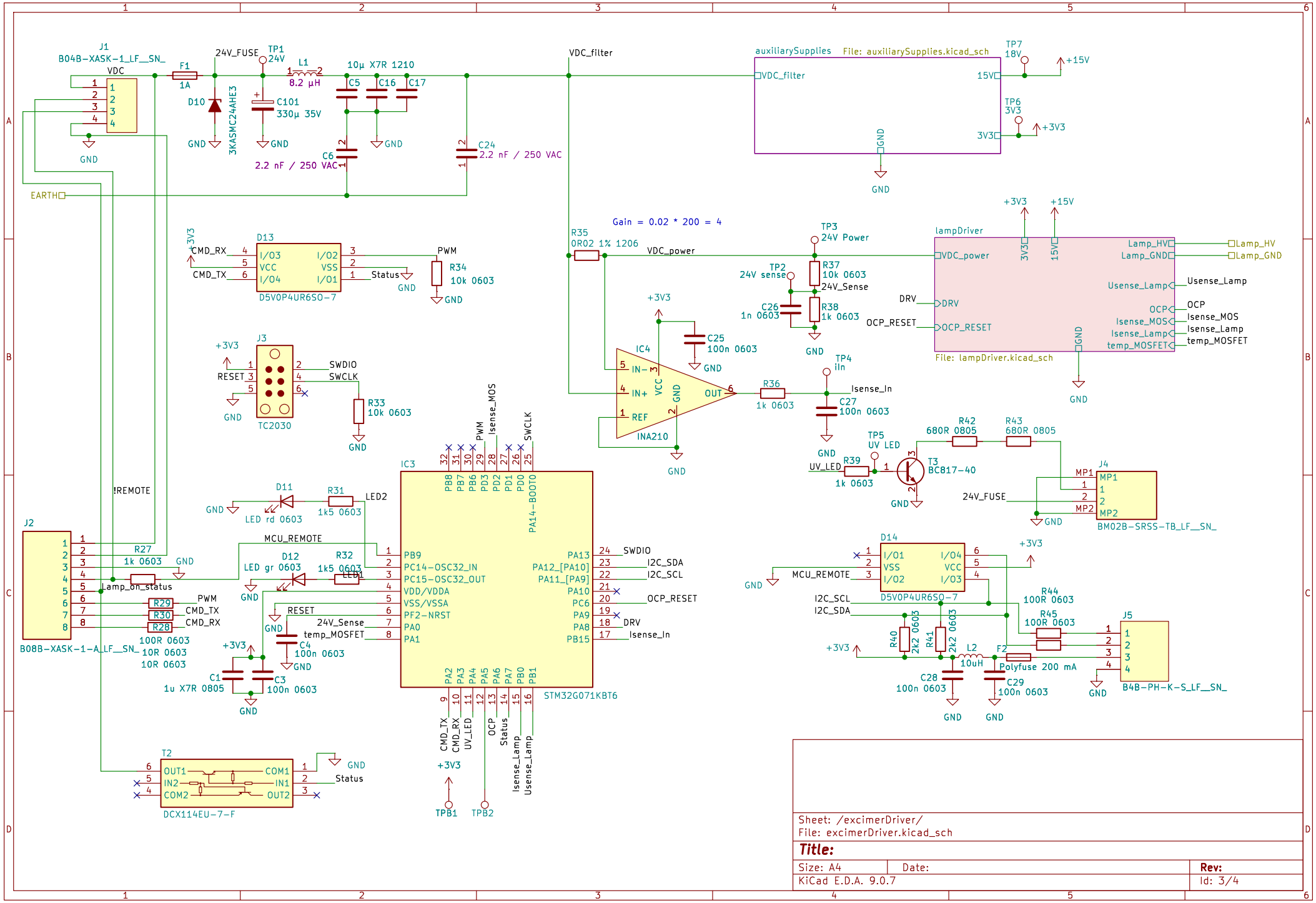
J1
B04B-XASK-1_LF__SN_
VDC
F1
1A
24V_FUSE
TP1
24V
L1
8.2 µH
10µ X7R 1210
C5
C16
C17
D10
3KASMC24AHE3
C101
330µ 35V
GND
C6
2.2 nF / 250 VAC
C24
2.2 nF / 250 VAC
EARTH
VDC_filter
auxiliarySupplies
File: auxiliarySupplies.kicad_sch
TP7
18V
+15V
TP6
3V3
+3V3
D13
D5V0P4UR6SO-7
CMD_RX
CMD_TX
PWM
Status
R34
10k 0603
Gain = 0.02 * 200 = 4
R35
0R02 1% 1206
VDC_power
TP3
24V Power
TP2
24V sense
R37
10k 0603
24V_Sense
R38
1k 0603
C26
1n 0603
C25
100n 0603
IC4
INA210
IN-
IN+
REF
VCC
GND
OUT
R36
1k 0603
TP4
iIn
Isense_In
C27
100n 0603
lampDriver
File: lampDriver.kicad_sch
VDC_power
DRV
OCP_RESET
Lamp_HV
Lamp_GND
Usense_Lamp
OCP
Isense_MOS
Isense_Lamp
temp_MOSFET
J3
TC2030
RESET
SWDIO
SWCLK
R33
10k 0603
TP5
UV LED
R39
1k 0603
UV_LED
T3
BC817-40
R42
680R 0805
R43
680R 0805
J4
BM02B-SRSS-TB_LF__SN_
MP1
MP2
24V_FUSE
D11
LED rd 0603
R31
1k5 0603
LED2
!REMOTE
J2
B08B-XASK-1-A_LF__SN_
R27
1k 0603
MCU_REMOTE
D12
LED gr 0603
R32
1k5 0603
LED1
Lamp_on_status
R29
R30
R28
100R 0603
10R 0603
10R 0603
C1
1u X7R 0805
C3
100n 0603
C4
100n 0603
IC3
STM32G071KBT6
PB9
PC14-OSC32_IN
PC15-OSC32_OUT
VDD/VDDA
VSS/VSSA
PF2-NRST
PA0
PA1
PA13
PA12_[PA10]
PA11_[PA9]
PA10
PC6
PA9
PA8
PB15
PA14-BOOT0
SWDIO
I2C_SCL
I2C_SDA
OCP_RESET
DRV
Isense_In
24V_Sense
temp_MOSFET
Isense_MOS
SWCLK
CMD_TX
CMD_RX
UV_LED
OCP
Status
Isense_Lamp
Usense_Lamp
TPB1
TPB2
D14
D5V0P4UR6SO-7
R44
100R 0603
R45
100R 0603
R40
2k2 0603
R41
2k2 0603
L2
10uH
F2
Polyfuse 200 mA
C28
100n 0603
C29
100n 0603
J5
B4B-PH-K-S_LF__SN_
T2
DCX114EU-7-F
OUT1
IN2
COM2
COM1
IN1
OUT2
Sheet: /excimerDriver/
File: excimerDriver.kicad_sch
Title:
Size: A4
Date:
Rev:
KiCad E.D.A. 9.0.7
Id: 3/4

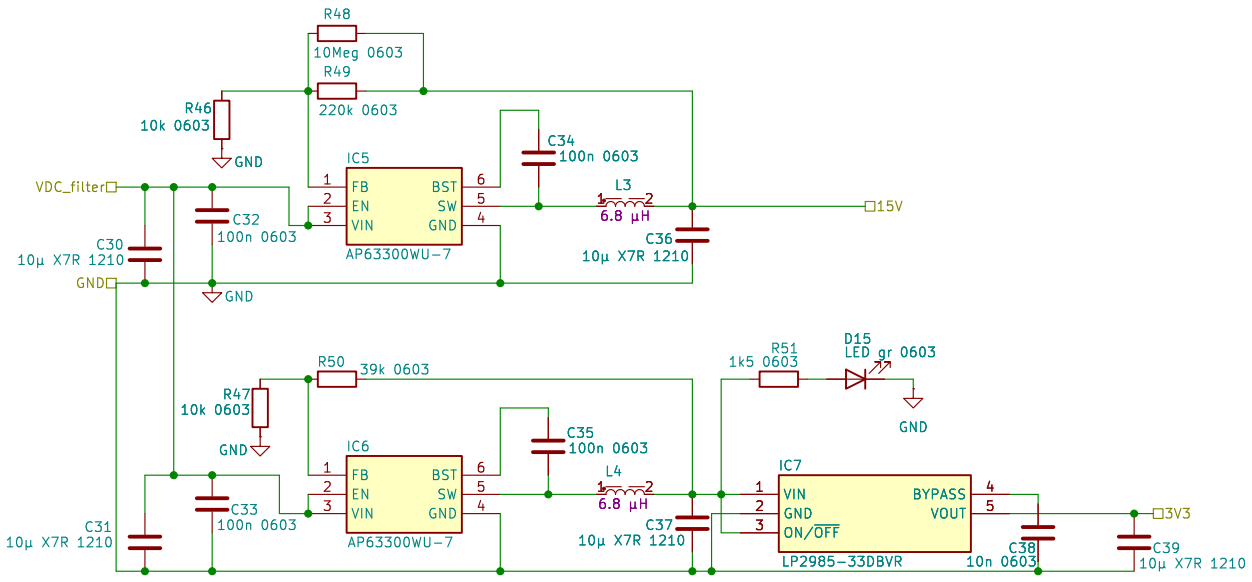

Sheet: /excimerDriver/auxiliarySupplies/
File: auxiliarySupplies.kicad_sch

Title:

Size: A4	Date:	Rev:
KiCad E.D.A. 9.0.7		Id: 4/4

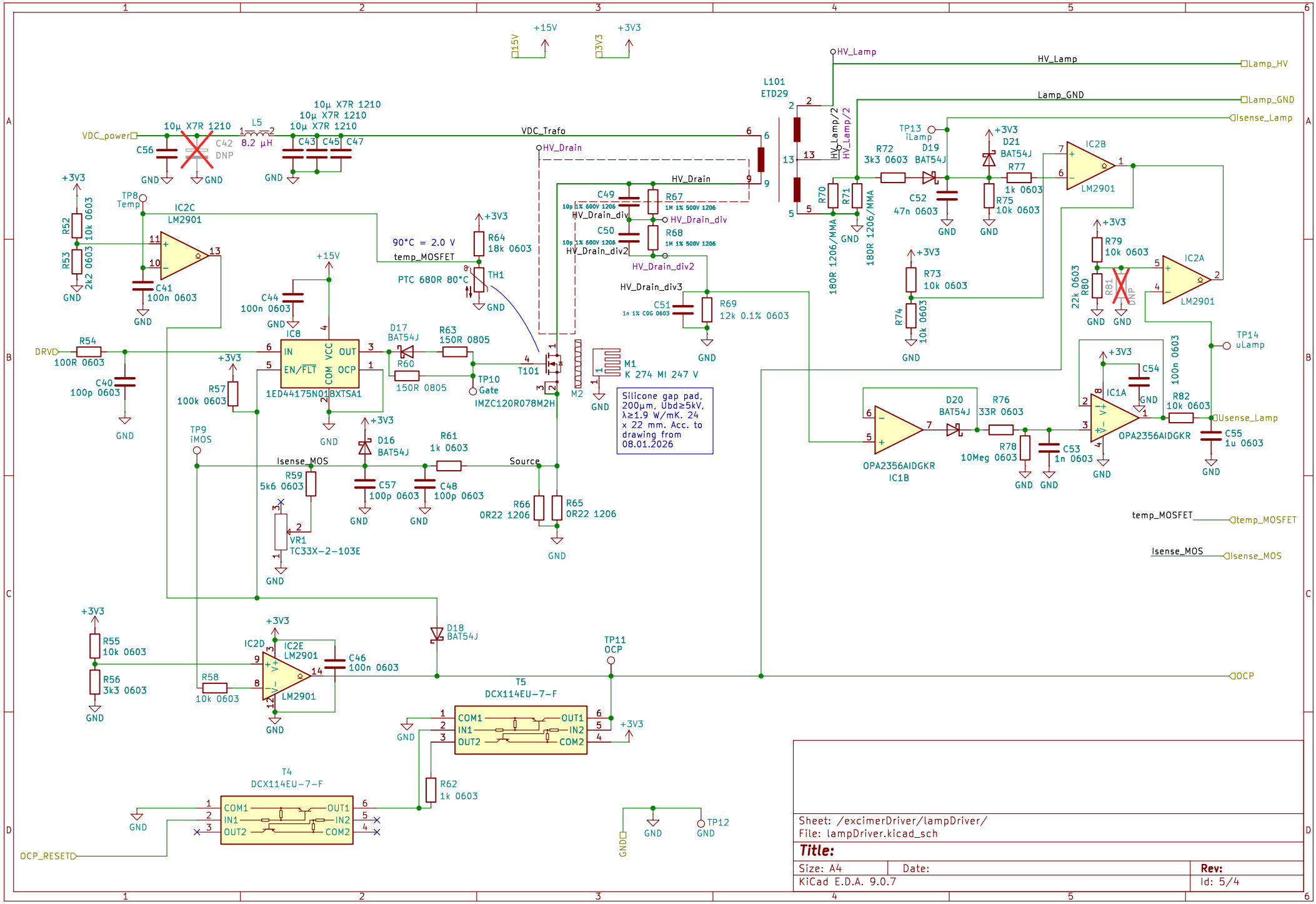

Sheet: /excimerDriver/lampDriver/
File: lampDriver.kicad_sch

Title:

Size: A4	Date:	Rev:
KiCad E.D.A. 9.0.7		Id: 5/4