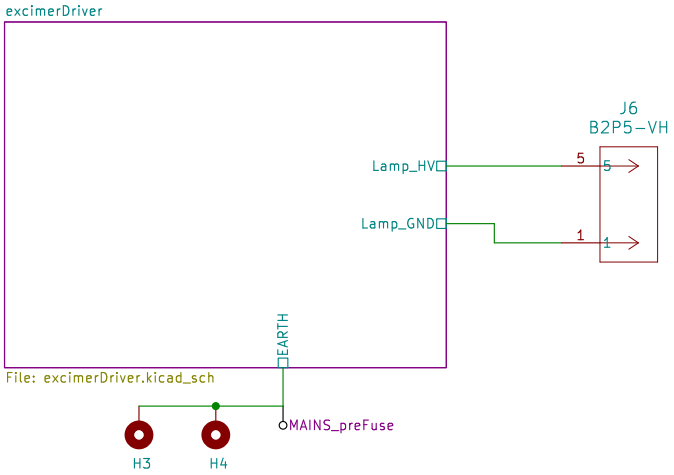

Sheet: /
File: OSLUV.kicad_sch

Title:

Size: A4	Date:	**Rev:**
KiCad E.D.A. 9.0.7		Id: 1/4

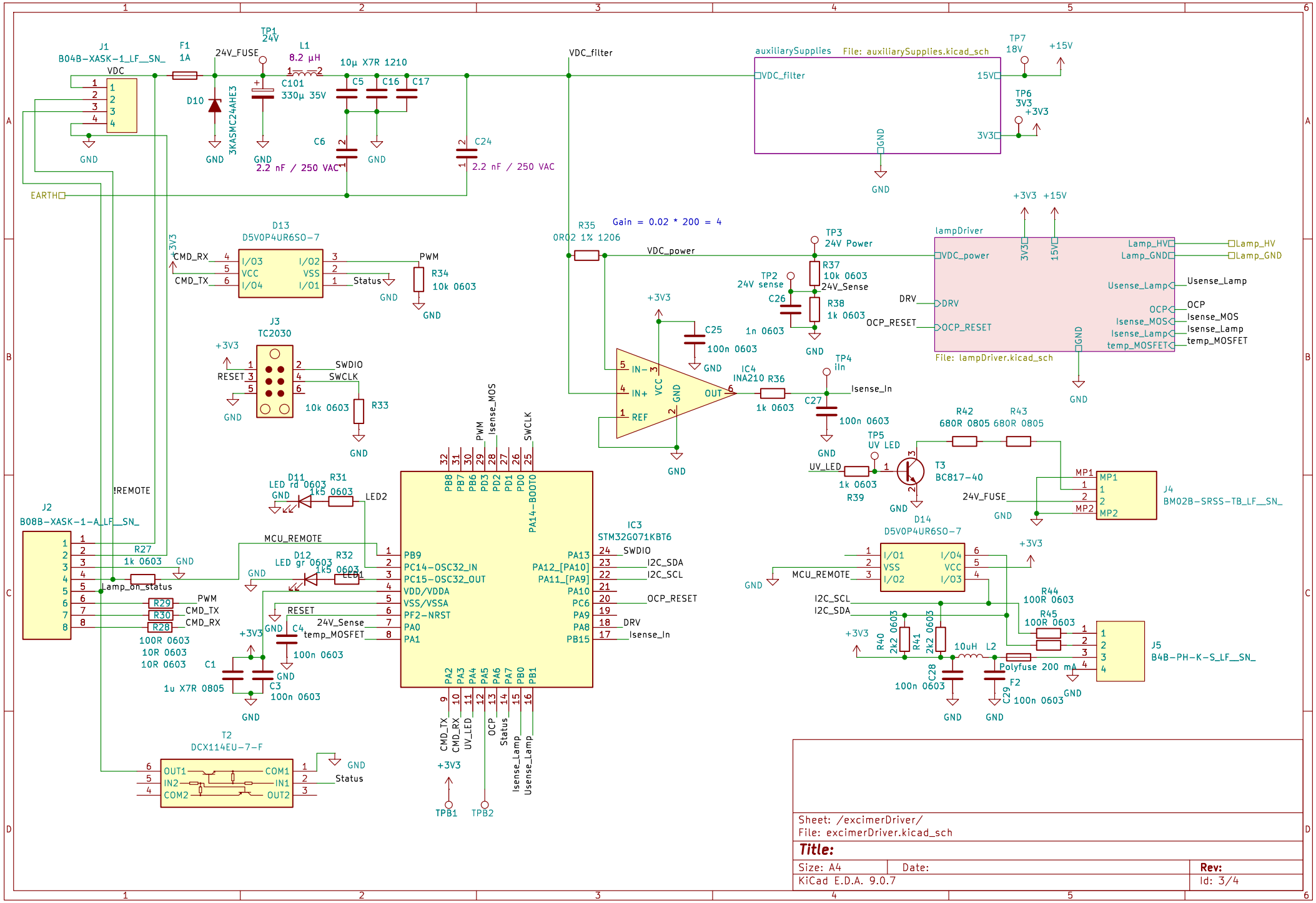
J1
B04B-XASK-1_LF__SN_
VDC
F1
1A
24V_FUSE
TP1
24V
L1
8.2 µH
10µ X7R 1210
C5
C16
C17
C101
330µ 35V
D10
3KASMC24AHE3
C6
2.2 nF / 250 VAC
C24
2.2 nF / 250 VAC
GND
EARTH
VDC_filter
auxiliarySupplies
File: auxiliarySupplies.kicad_sch
15V
3V3
TP7
18V
+15V
TP6
3V3
+3V3
D13
D5V0P4UR6SO-7
CMD_RX
CMD_TX
I/O3
VCC
I/O4
I/O2
VSS
I/O1
Status
PWM
R34
10k 0603
R35
0R02 1% 1206
Gain = 0.02 * 200 = 4
VDC_power
TP3
24V Power
R37
10k 0603
24V_Sense
TP2
24V sense
C26
1n 0603
R38
1k 0603
lampDriver
File: lampDriver.kicad_sch
VDC_power
DRV
OCP_RESET
Lamp_HV
Lamp_GND
Usense_Lamp
OCP
Isense_MOS
Isense_Lamp
temp_MOSFET
J3
TC2030
RESET
SWDIO
SWCLK
R33
10k 0603
C25
100n 0603
IC4
INA210
IN-
IN+
REF
VCC
GND
OUT
R36
1k 0603
TP4
iIn
Isense_In
C27
100n 0603
R42
680R 0805
R43
680R 0805
TP5
UV LED
UV_LED
1k 0603
R39
T3
BC817-40
MP1
MP2
J4
BM02B-SRSS-TB_LF__SN_
24V_FUSE
D14
D5V0P4UR6SO-7
MCU_REMOTE
I2C_SCL
I2C_SDA
R44
100R 0603
R45
100R 0603
R40
2k2 0603
R41
2k2 0603
10uH
L2
Polyfuse 200 mA
F2
C28
100n 0603
C29
100n 0603
J5
B4B-PH-K-S_LF__SN_
J2
B08B-XASK-1-A_LF__SN_
!REMOTE
R27
1k 0603
Lamp_on_status
R29
R30
R28
100R 0603
10R 0603
10R 0603
D11
LED rd 0603
R31
1k5 0603
LED2
D12
LED gr 0603
R32
1k5 0603
LED1
C1
1u X7R 0805
C3
100n 0603
C4
100n 0603
IC3
STM32G071KBT6
PB9
PC14-OSC32_IN
PC15-OSC32_OUT
VDD/VDDA
VSS/VSSA
PF2-NRST
PA0
PA1
PA13
PA12_[PA10]
PA11_[PA9]
PA10
PC6
PA9
PA8
PB15
SWDIO
I2C_SDA
I2C_SCL
OCP_RESET
DRV
Isense_In
PA14-BOOT0
PB8
PB7
PB6
PD3
PD2
PD1
PD0
PA2
PA3
PA4
PA5
PA6
PA7
PB0
PB1
CMD_TX
CMD_RX
UV_LED
OCP
Status
Isense_Lamp
Usense_Lamp
TPB1
TPB2
T2
DCX114EU-7-F
OUT1
IN2
COM2
COM1
IN1
OUT2
Sheet: /excimerDriver/
File: excimerDriver.kicad_sch
Title:
Size: A4
Date:
Rev:
KiCad E.D.A. 9.0.7
Id: 3/4

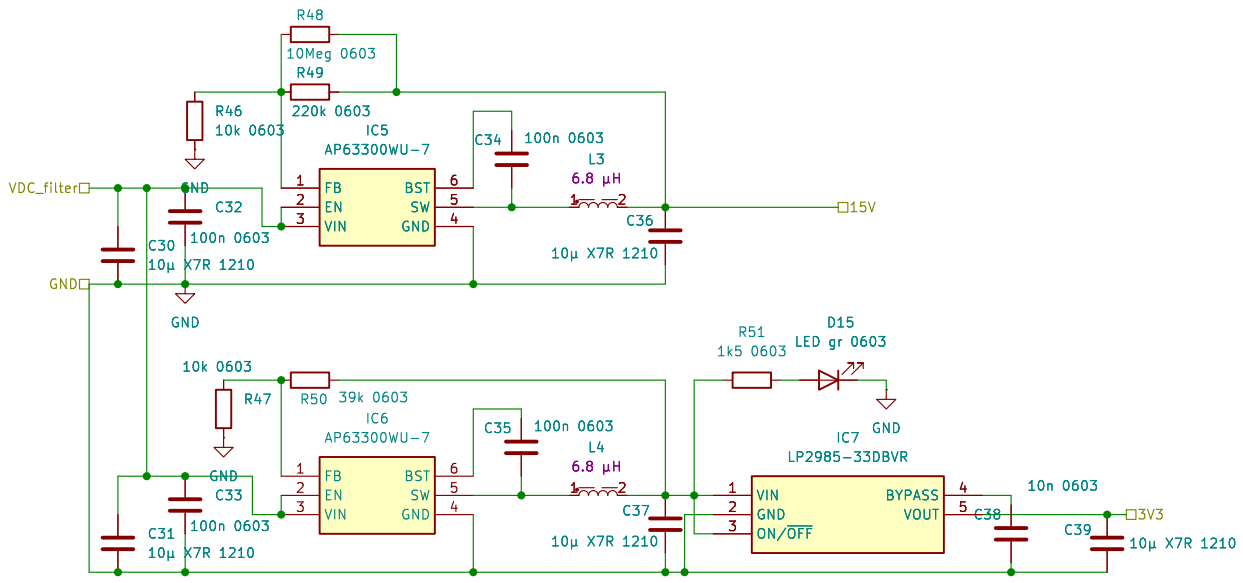

Sheet: /excimerDriver/auxiliarySupplies/
File: auxiliarySupplies.kicad_sch

Title:

Size: A4	Date:	Rev:
KiCad E.D.A. 9.0.7		Id: 4/4

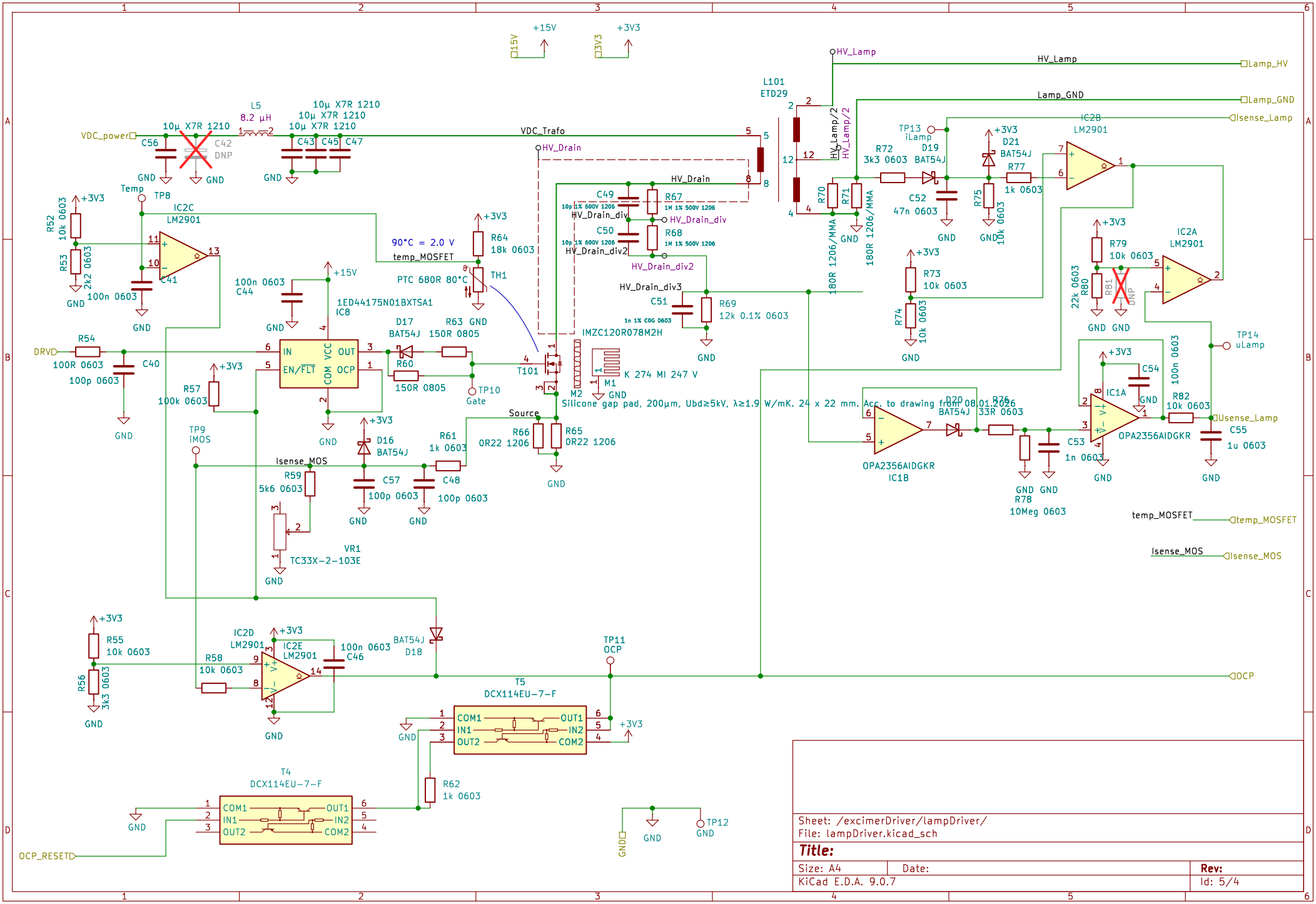
+15V
+3V3
HV_Lamp
Lamp_HV
Lamp_GND
Isense_Lamp
L101
ETD29
VDC_power
C56
10µ X7R 1210
C42
DNP
L5
8.2 µH
10µ X7R 1210
C43
C45
C47
VDC_Trafo
HV_Drain
GND
Temp
TP8
IC2C
LM2901
R52
10k 0603
R53
2k2 0603
C41
100n 0603
90°C = 2.0 V
temp_MOSFET
PTC 680R 80°C
TH1
R64
18k 0603
C44
1ED44175N01BXTSA1
IC8
D17
BAT54J
R63
150R 0805
R60
150R 0805
DRV
R54
100R 0603
C40
100p 0603
R57
100k 0603
TP10
Gate
T101
IMZC120R078M2H
M1
K 274 MI 247 V
M2
Silicone gap pad, 200µm, Ubd≥5kV, λ≥1.9 W/mK. 24 x 22 mm. Acc. to drawing from 08.01.2026
C49
10p 1% 600V 1206
HV_Drain_div
C50
HV_Drain_div2
R67
1M 1% 500V 1206
R68
1M 1% 500V 1206
HV_Drain_div3
C51
1n 1% C0G 0603
R69
12k 0.1% 0603
R70
180R 1206/MMA
R71
180R 1206/MMA
TP13
iLamp
R72
3k3 0603
D19
BAT54J
C52
47n 0603
D21
BAT54J
R75
10k 0603
R77
1k 0603
R73
10k 0603
R74
10k 0603
IC2B
LM2901
R79
10k 0603
R80
22k 0603
R81
DNP
IC2A
LM2901
TP14
uLamp
C54
100n 0603
IC1A
OPA2356AIDGKR
R82
10k 0603
Usense_Lamp
C55
1u 0603
D20
BAT54J
R76
33R 0603
C53
1n 0603
R78
10Meg 0603
OPA2356AIDGKR
IC1B
temp_MOSFET
Isense_MOS
TP9
iMOS
R59
5k6 0603
VR1
TC33X-2-103E
D16
BAT54J
R61
1k 0603
C57
100p 0603
C48
100p 0603
R66
0R22 1206
R65
0R22 1206
Source
R55
10k 0603
R56
3k3 0603
IC2D
LM2901
IC2E
LM2901
R58
10k 0603
C46
100n 0603
BAT54J
D18
TP11
OCP
OCP
T5
DCX114EU-7-F
COM1
IN1
OUT2
OUT1
IN2
COM2
R62
1k 0603
T4
DCX114EU-7-F
OCP_RESET
TP12
Sheet: /excimerDriver/lampDriver/
File: lampDriver.kicad_sch
Title:
Size: A4
Date:
Rev:
KiCad E.D.A. 9.0.7
Id: 5/4