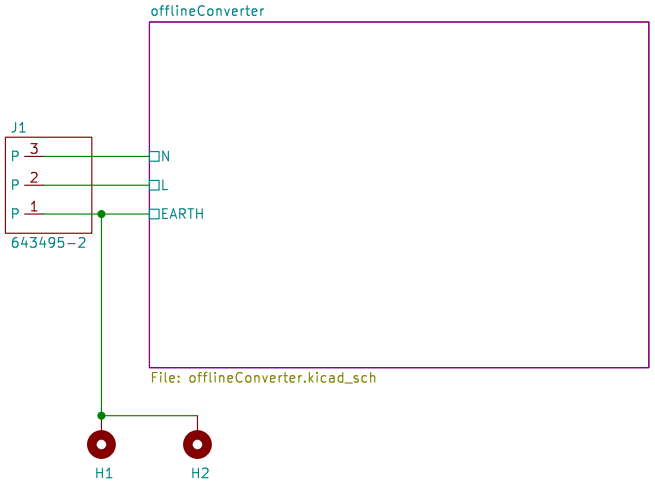

Sheet: /
File: OSLUV_OfflineConverter.kicad_sch

Title:

Size: A4	Date:	**Rev:**
KiCad E.D.A. 9.0.7		Id: 1/2

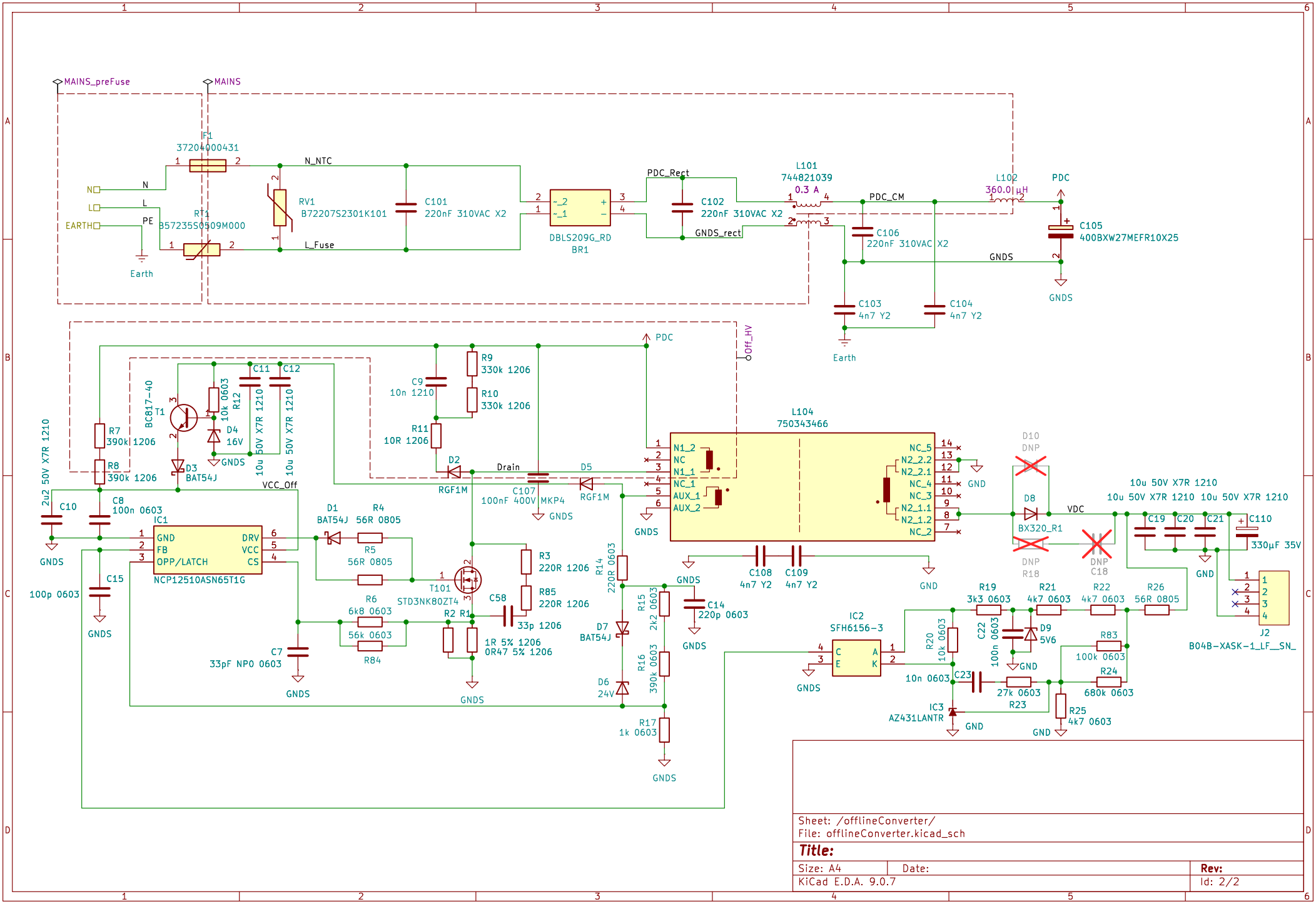

Sheet: /offlineConverter/
File: offlineConverter.kicad_sch

Title:

Size: A4	Date:	Rev:
KiCad E.D.A. 9.0.7		Id: 2/2