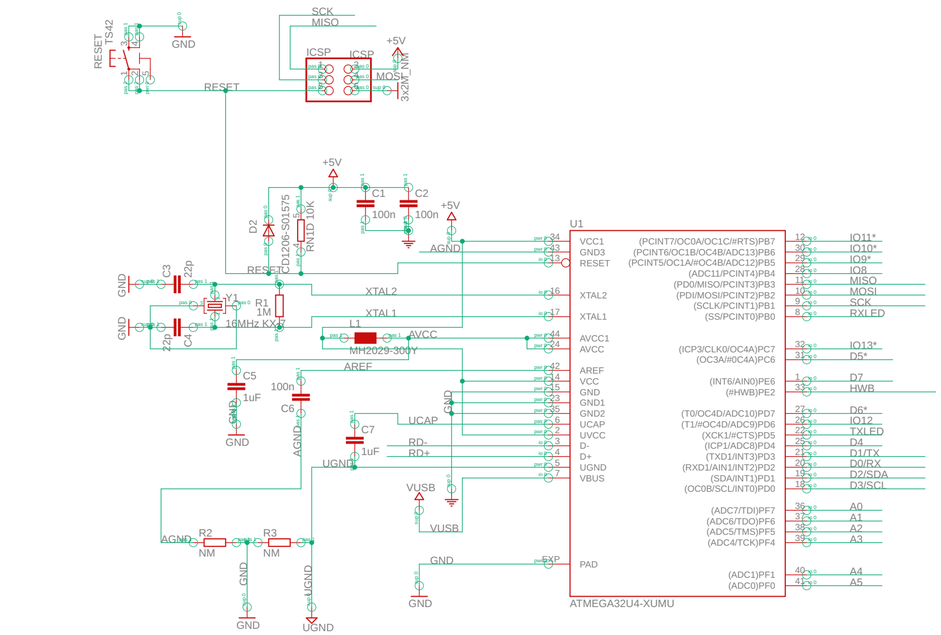

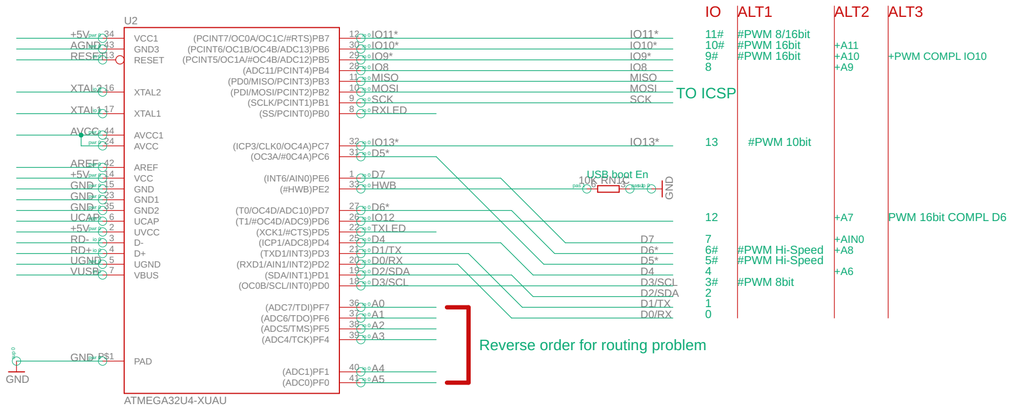

IO	ALT1	ALT2	ALT3
11#	#PWM 8/16bit		
10#	#PWM 16bit	+A11	
9#	#PWM 16bit	+A10	+PWM COMPL IO10
8		+A9	
13	#PWM 10bit		
12		+A7	PWM 16bit COMPL D6
7		+AIN0	
6#	#PWM Hi-Speed	+A8	
5*	#PWM Hi-Speed		
4		+A6	
3#	#PWM 8bit		
2			
1			
0			

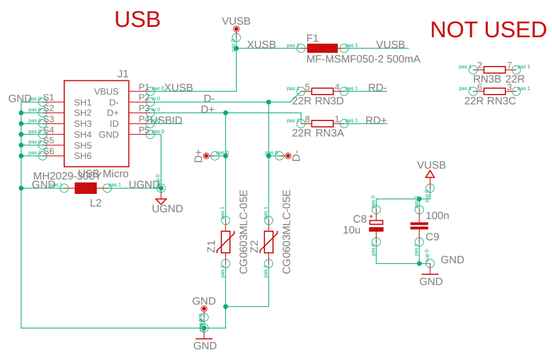

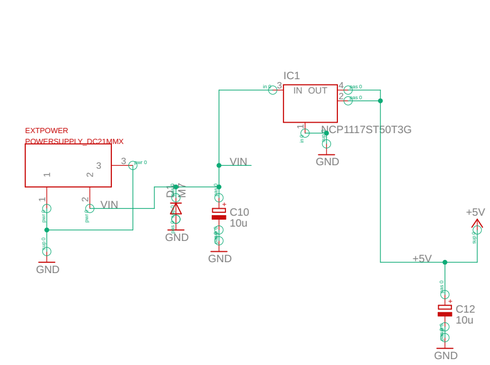

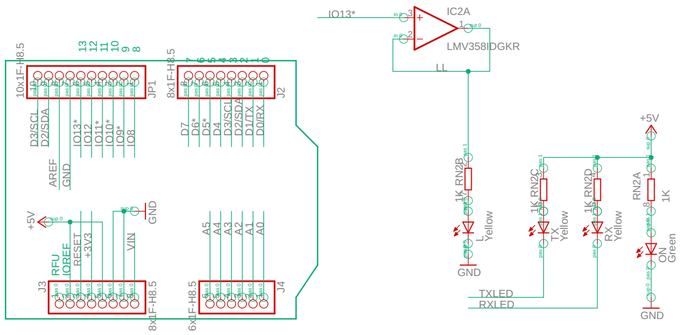

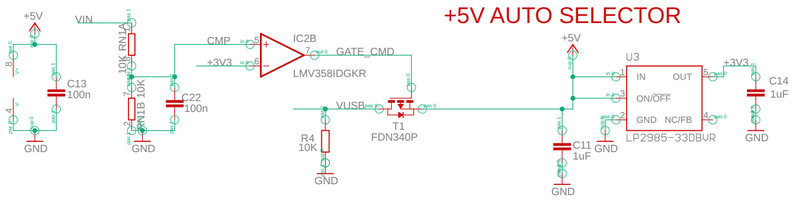

Reference Designs ARE PROVIDED "AS IS" AND "WITH ALL FAULTS. Arduino SA DISCLAIMS ALL OTHER WARRANTIES, EXPRESS OR IMPLIED, REGARDING PRODUCTS, INCLUDING BUT NOT LIMITED TO, ANY IMPLIED WARRANTIES OF MERCHANTABILITY OR FITNESS FOR A PARTICULAR PURPOSE.
Arduino SA may make changes to specifications and product descriptions at any time, without notice. The Customer must not rely on the absence or characteristics of any features or instructions marked "reserved" or "undefined". Arduino SA reserves these for future definition and shall have no responsibility whatsoever for conflicts or incompatibilities arising from future changes to them.
The product information on the Web Site or Materials is subject to change without notice. Do not finalize a design with this info

ARDUINO and other Arduino brands and logos and Trademarks of Arduino SA. All Arduino SA Trademarks cannot be used without owner's formal permission

This file is licensed under : CC-SA-BY-NC

Leonardo_Rev3d

24/09/18 12:15

Sheet: 1/1