Oregon State University

2018 NASA SL Team

Preliminary Design Review

11/03/17

104 Kerr Admin Bldg. # 1011
Corvallis, OR 97331

Table of Contents

1. General Information 1
   1.1. Adult Educators 1
   1.2. Student Team Leadership 1
   1.3. Team Structure and Organization 1
   1.4. NAR/TRA Sections 3
2. Summary of PDR Report 4
   2.1. Team Summary 4
   2.2. Launch Vehicle Summary 4
   2.3. Payload Summary 4
3. Changes Made Since Proposal 5
   3.1. Vehicle Criteria 5
   3.2. Payload Criteria 5
   3.3. Project Plan 6
      3.3.1. Budget 6
      3.3.2. Funding Plan 6
      3.3.3. Timeline 6
4. Vehicle Criteria 7
   4.1. Selection, Design, and Rationale of Launch Vehicle 7
      4.1.1. Mission Statement and Success Criteria 7
      4.1.2. Sub-System Review 7
      4.1.3. Motor Alternatives 16
      4.1.4. Leading Airframe Design 14
   4.2. Recovery Subsystem 16
      4.2.1. Component Level Design 17
      4.2.2. Recovery System Sizing 28
      4.2.3. System Layout 31
      4.2.4. Redundancy 33
   4.3. Avionics 34
      4.3.1. GPS Block 35
      4.3.2. RF Transceiver Block 37
      4.3.3. Power Supply 41
      4.3.4. Additional Avionics Considerations 42

4.4. Mission Performance Predictions 43
4.4.1. Flight Profile Simulation 43
4.4.2. Stability 44
4.4.3. Drift 44
4.4.4. Kinetic Energy 46
5. Safety 47
5.1. Component Risks and Delay Impact 47
5.1.1. Safety Responsibilities 47
5.1.2. Risk Analysis 47
5.2. Personnel Hazard Analysis 48
5.3. Failure Modes and Effects Analysis (FMEA) 49
5.4 Project Risk Analysis 52
6. Payload Criteria 54
6.1. Payload Objective 54
6.2. Sub-System Review 54
6.2.1. Chassis 54
6.2.2. Stabilizer 57
6.3. Drivetrain 59
6.3.2. Sensors 70
6.3.3. Rover Power Supply 74
6.3.4. Ejection 78
6.3.5. Solar 85
6.3.6. Controls 88
6.3.7. Sensors 89
6.3.8. Integrated Electronics 91
6.3.9. Payload Software 92
6.4. Current Leading Overall Design 96
7. Project Plan 96
7.1.1. Requirements Verification 97
7.1.2. Budgeting and Timeline 112
8. Educational Outreach 122
8.1. Silver Crest School (K8) 122
8.2. Overall Mission 123
9. Appendix A: Drawings and Schematics 124
Appendix B: Preliminary Checklists 127

Launch Vehicle Assembly Checklist 127
Pre-Flight Checklist 129
Appendix C: Table of Figures 130

1. General Information

1.1. Adult Educators

The Oregon State Rocketry Team (OSRT) has one team advisor and one team mentor whose information can be found in Table 1-1.

Table 1-1: Team Mentor Information

Name	**Nancy Squires**	**Joe Bevier**
Professional Title	Senior Instructor	OROC TRA TAP
Academic Institution	Oregon State University	Oregon State University
Position within OSRT	Team Advisor	Team Mentor
Contact	squiresn@engr.orst.edu (541) 740-9071	joebevier@gmail.com (503) 475-1589
TRA/NAR Number Certification Level	TRA #15210 Level 3 NAR #97371 Level 3	TRA #12578 Level 3 NAR #87559 Level 3

1.2. Student Team Leadership

The OSRT has a team leader and safety officer responsible for the proper implementation of the safety plan, their information can be found in Table 1-2.

Table 1-2: Student Team Leadership Information

Name	**Evan Gonnerman**	**Timothy Lewis**
Title within OSRT	Team Leader	Safety Officer
Contact	evangonnerman@gmail.com (503) 858-8806	lewis@oregonstate.edu (503) 453-6396
TRA Number, Certification Level	Certification Pending	Certification Pending

1.3. Team Structure and Organization

The OSRT consists of 37 members from the schools of Mechanical Engineering, Electrical Engineering, and Computer Science. The team seeks to involve members of the campus AIAA (American Institute of Aeronautics and Astronautics) chapter and students of the local high school (Corvallis High School) as an effort to enhance the educational outreach.

Due to the multi-faceted nature of this project, it has been broken up into three sub-teams, according to technical design, with the following team descriptions:

- *Structures/Propulsion* – Responsible for design and fabrication of the airframe and all internal components necessary for a successful launch and payload recovery. This team will also oversee selecting and implementing a motor while considering safety and handling before and after each launch. Key responsibilities include mass and stress analysis to ensure altitude precision, understanding key propulsive features to ensure reliability, and monitoring of the effects of design improvements.

- *Aerodynamics-Recovery* – Responsible for the electronics behind aerodynamic stability, all parachute systems for recovery systems, and design of stability measures. Key requirements are to ensure a safe landing, monitor kinetic energy criteria, and fabricate electrical and mechanical hardware to ensure aerodynamic flight.
- *Payload* – Responsible for the design, fabrication, and testing of a rover capable of traveling five feet and deploying a set of solar panels. Key responsibilities include meeting all customer requirements for the payload, designing a payload that reliably functions, and rigorously testing prior to final launch.

The team hierarchy consists of a team lead and three sub-team leads. Each sub-team lead oversees a project team and additional testing project teams. The additional project teams are responsible for developing a test bed for recovery ejection methods, implementing data logging features to the airframe, creating a test method for ejection of the rover, and developing a rover prototype as software testbed. The team organization can be seen in Figure 1-1.

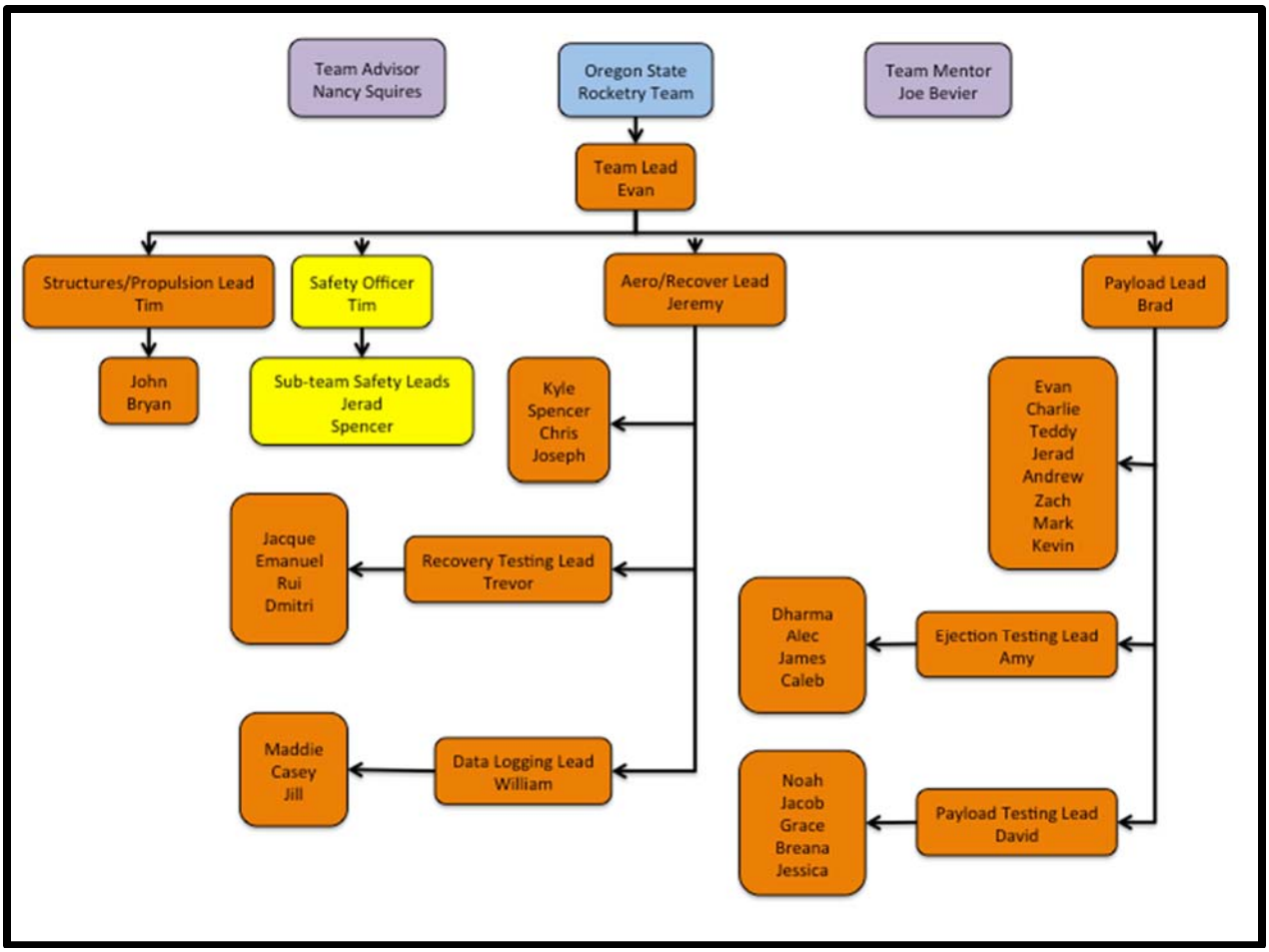

Figure 1-1: Team Organization Chart

1.4. NAR/TRA Sections

The team, if needed, may work with the following NAR/TRA groups for mentorship, design and documentation review, and launch assistance.

Table 1-3: NAR/TRA Groups

Organization Name	Contact	NAR/TRA
Tripoli Portland #49	Keith Packard	TRA
Eugene Rocketry (EUROC) #733	John Lyngdal	NAR
Gorge Rocket Club (GRC) #790	John Thompson	NAR
Oregon Rocketry Enthusiasts Organization (OREO) #555	George Rachor	NAR

2. Summary of PDR Report

2.1. Team Summary

Table 2-1: Team Summary Chart

Team Name	Oregon State Rocketry Team
Mailing Address	104 Kerr Admin Bldg. #1011 Corvallis, OR 97331
Name of Mentor	Joe Bevier
NAR Number, Certification Level	NAR #87559 Level 3
TRA Number, Certification Level	TRA #12578 Level 3
Contact Information	joebevier@gmail.com, (503) 475-1589

2.2. Launch Vehicle Summary

Table 2-2: Launch Vehicle Summary Chart

Total Length (in.)	Diameter (in)	Loaded Weight (lbs.)	Stability (cal)
116	5	45.2	2.75

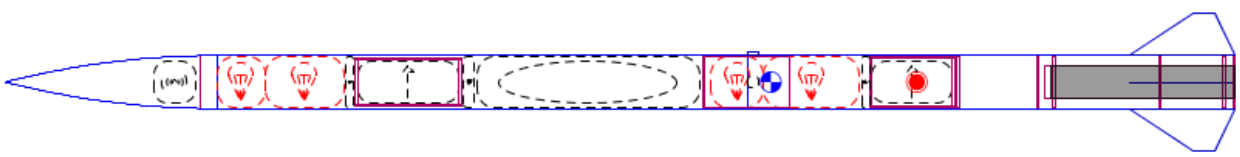

The main rocket body is a five-inch diameter carbon fiber tube. The rocket uses a fiberglass nosecone and has four clipped delta fins. The launch vehicle is recovered in two independent sections: the motor section and the payload section. Each recovered section uses a single separation recovery system with a drogue deployed at apogee and a main chute that deploys at a lower altitude. The payload will exit the airframe through the open hole where the motor bay connects. The motor to be used is an L1420 75 mm. mount motor.

2.3. Payload Summary

The OSRT team has chosen to complete option two for the USLI payload: a deployable rover. The rover will have two coaxial, independently driven wheels with a chassis suspended between them. A spring-loaded stabilizer arm will act as a third point of contact with the ground. A Raspberry Pi 3 will autonomously control the motors to move the rover, taking input from a sensor array including GPS, sonar, and a nine-degree-of-freedom IMU (inertial measurement unit). A servo-actuated solar array will be mounted on the top surface of the rover.

The rover will be housed in the payload bay of the launch vehicle, fully enclosed, during launch and descent. After the rocket is determined to have landed safely, a signal will be transmitted to the rocket to deploy the rover. The rover will exit the open end of the payload bay, still contained in a carbon fiber housing. Once the housing is clear of the airframe, it will spring open, releasing the rover. The rover will drive at least five feet away from all parts of the airframe, navigating away from the launch vehicle and around other obstacles by using data from its sensors. Once the rover has reached a sufficiently clear location, the solar array will open, completing the mission.

3. Changes Made Since Proposal

3.1. Vehicle Criteria

The launch vehicle has increased in diameter from four inches to five inches. This was done to allow for an increased payload size. To support this decision, the main material of the rocket has been changed from fiberglass to carbon fiber. The change to carbon fiber provides a greater strength for the airframe since the diameter change also led to an increased rocket length.

The change to a larger rocket size also resulted in a significant increase in the weight of the rocket from 17 pounds to 45.2 pounds. This increase necessitated a corresponding increase in thrust and specific impulse to achieve the same altitude goals. In addition, the fins needed to be changed to maintain stability for the new rocket size. Since a kit rocket is no longer being used, the decision was made to change from three fins to four fins to simplify the manufacturing process.

The increased weight of the rocket also necessitated a change in the recovery system to bring the landing kinetic energy below 75 ft.-lbs. A second recovery system was added to allow the motor bay to be recovered separately from the payload bay and nosecone. Furthermore, the recovery system was also changed to a single separation event to decrease the number of independent sections making up the rocket. This new recovery system deploys the drogue at apogee and releases the main parachute in a deployment bag so that it can deploy at a lower altitude.

3.2. Payload Criteria

The basic rover design used in OSRT's proposal has stayed constant. The system consists of two external wheels connected to a central chassis, a main Raspberry Pi computer system, and a stabilizer to ensure forward motion. However, the intricacies of this setup have changed dramatically from the initial proposal.

Initially, OSRT designed a single axis rover solely capable of forward travel. The current system decouples the wheels using two individual motors to allow for directional degrees of freedom. This allows for smart navigation upon deployment to avoid obstacle collision. Because the original design did not include any external sensors to read in environmental data, the decision was made to integrate a GPS module, an IMU (inertial measurement unit), and a sonar sensor. Using these devices, the rover is capable of autonomously deciding where its starting location was, locating an ending location, and figuring out what obstacles impede its path between the two. These changes significantly increase the hardware and computational complexity of the rover but will provide necessary tools for dealing with unplanned landing and deployment orientations.

Due changes to the drivetrain and an increase in the airframe diameter, the chassis required multiple design revisions to incorporate these modifications. The original two bearing design would most likely deform under the high compressive loads of launch and main parachute deployment and needed a design change. The current system incorporates a truss design to mitigate massive compressive loads while providing protection to computational equipment, electronics, and driving motors. This modular system allows for ease of development when placing vibrational dampening and shock absorption units into the rover. Furthermore, the proposed chassis design can withstand significant loads during main parachute deployment where up to 20 g's of acceleration can occur. The proposed changes will significantly increase the performance of the rover payload during flight and upon deployment from the airframe.

3.3. Project Plan

3.3.1. Budget

The budget was updated to reflect the addition of general team items. T-shirts and polos with the team logo, as well as polos and jackets from AIAA were added for each team member. Small rockets were purchased for each team member so that everyone can attempt to get HPR Level 1 certified. Stock composite materials were added in bulk for reduced prices instead of purchasing small amounts. This removes flexibility for material selection for sub-teams, but greatly reduces the overall project cost.

The launch vehicle was increased from 4” OD to 5”, which adds increased cost for airframe components. The recovery system was changed to a 2-section recovery, which doubles the required number of avionics, ejection controllers, parachutes, and rigging, which adds significant cost. The payload has become significantly more defined since the proposal and many more components have been added as a result.

3.3.2. Funding Plan

The plan for solicitation of funds and sponsorships has remained the same since the proposal.

3.3.3. Timeline

Having successfully completed a rocketry outreach event with a group of eighth graders on the Oregon State campus, the team plans to extend its outreach further in the coming weeks. Tentative educational outreach plans have been added to the team’s timeline, but specific dates will not be scheduled for the entirety of the project because some dates with schools cannot be finalized ahead of time. The team has been developing a series of lesson plans to be utilized and coordinated with multiple schools for maximum impact to the students in relation to their classes. Additionally, using the alumni information from members of the team, a list of schools ranging from K-12 have been compiled and contacted with news of the team. The only missing component is dates, as many schools need to make time in their schedules and the team needs to coordinate availabilities to travel to the schools in question.

Gantt charts have been updated to reflect Structures and Propulsion manufacturing deadlines, Aerodynamics and Recovery implementation and testing deadlines and periods, as well as Payload revision phases. The payload sub-team has scheduled three revisions: a preliminary prototype on which unit testing can be performed, a full-scale integration model on which critical design revisions can be evaluated, and a final performance-ready model which will undergo rigorous testing before the competition.

4. Vehicle Criteria

4.1. Selection, Design, and Rationale of Launch Vehicle

4.1.1. Mission Statement and Success Criteria

The launch vehicle shall be reusable. It shall deliver the rover payload to an altitude of one mile AGL, successfully deploy recovery systems at apogee, and return the airframe to ground within allowable kinetic energy requirements. The mission shall be considered a success when following has been completed:

- The rocket launches in a stable configuration toward apogee.
- The rocket has reached the target altitude of one mile.
- The rocket has a successful separation into two recovery sections.
- The drogue chutes deploy successfully.
- The main chute deploys successfully.
- Each section lands safely and within kinetic energy requirements in target area.

4.1.2. Sub-System Review

4.1.2.1. Rocket Body

The material options for the rocket body were fiberglass, carbon fiber, and aluminum 6061-T6. Carbon fiber is a common material for high-powered rockets due to its strength, lightweight construction, and reliability. Fiberglass is a common material used for high powered rockets due to the same reasons carbon fiber is. Fiberglass has distinct differences from carbon fiber that can make it desirable depending on the constraints of the mission. While both materials will be able to withstand the immense pressures of flight, carbon fiber is stiffer than fiberglass so it will be more reliable under compressive forces.

Aluminum 6061-T6 would be able to perform well given the mission requirements. The main reasons for this material are its low cost and the ease of modifying for design purposes. Aluminum 6061-T6 is easier to modify in comparison to carbon fiber and fiberglass but is heavier and has a higher potential for material failure than the corresponding options.

The engineering requirements of weight, thermal conductivity, cost, strength, and the ability to modify the design are detailed in Table 4-1. Specifically, the requirements used for rocket body selection are as follows:

- Weight: Measured in pounds and acts as the largest factor to consider and necessary to minimize for the project requirements.
- Thermal Conductivity: Necessary to maximize to reduce overheating of internal electronics and materials.
- Cost: Necessary to minimize to increase fund availability.
- Strength: Measured in Young's Modulus and necessary to maximize to reduce probability of deformation during launch.
- Ability to Modify: A qualitative variable describing the ease of manufacturability for the given material.

Table 4-1: Main Body Material Decision Matrix

Main Body Material							
Design		**Fiberglass**		**Carbon Fiber**		**Aluminum 6061-T6**	
Requirement	Weight	Value	Score	Value	Score	Value	Score
Weight	10	8	80	10	100	6	60
Thermal Conductivity	3	10	30	8	24	6	18
Cost	3	8	24	4	12	10	30
Strength	8	8	64	10	80	4	32
Ability to Modify	8	7	56	6	48	10	80
Total		**254**		**264**		**220**	

Based off the properties of carbon fiber, specifically the high strength-to-weight ratio, the body will be made from this material. The material is not RF transparent, which will cause fiberglass couplers to be used to maintain constant ground station communication during flight. However, picking a lightweight material will help reduce the weight of the rocket, causing an improvement in rocket performance and reliability of the recovery system. The weight reduction will allow for more freedom when designing the rover. Finally, the high stiffness of carbon fiber will prevent the body from flexing or deforming, reducing the likelihood of components breaking.

4.1.2.2. Nosecone

The primary goal of the nosecone is to decrease the coefficient of drag of the rocket. Past rocket teams at Oregon State University have utilized a von Karmen nosecone for its superior transonic and supersonic performance characteristics. However, the launch vehicle for the USLI competition will be travelling at a maximum speed of Mach 0.55. For the USLI competition three different nosecone profiles are being considered. These are the conical, ogive and Von Karmen profiles.

The Von Karmen nosecone has the greatest aerodynamic properties of these nose cones, especially in the transonic and supersonic regions. The ogive nosecone has similar aerodynamic properties in the subsonic region, but has a significantly higher drag in the transonic and supersonic regions. The conical nosecone also has a similar drag coefficient at subsonic speeds, but the transonic transition is at a much lower speed. The conical nosecone is the easiest to manufacture because it has less precise curves needed to make the shape. The ogive and Von Karmen profiles are more difficult to manufacture because they consist of slight curves. However, there are multiple companies that sell 4:1 ogive nosecones. Teams at OSU in the past have had problems creating nosecones, so this option could significantly cut down on machining times. Table 4-2 shows the decision matrix used to choose between the different nosecone profiles.

Table 4-2: Nosecone Profile Decision Matrix

Nosecone Profiles							
Design		Ogive		Von Karman		Cone	
Requirement	Weight	Value	Score	Value	Score	Value	Score
Coefficient of drag	10	8	80	9	90	6	60
Ease of manufacturing	7	5	35	4	28	8	56
Ease of purchasing	3	8	24	3	9	3	9
Total		**139**		**127**		**125**	

An ogive nosecone will be used for this mission. The ogive nosecone's performance in the subsonic range of flight is exemplary and is available for purchase. The availability to purchase the nosecone will help lower machining times and prevent manufacturing errors from negatively impacting the launch.

The nosecone will be constructed out of fiberglass. The high compressive strength of fiberglass and its toughness makes it ideal for the constant forces present during launch. The nosecone houses avionics and will be transmitting radio frequencies so that the team can track the position of the rocket. Fiberglass has RF transparency, which will allow for a secure connection to the ground station. The alternative to fiberglass is carbon fiber which provides strength but does not allow for RF penetration.

The decision was made based on a balance of the weight, cost, strength, ease of manufacturability, and RF transparency as detailed in Table 4-3**.** The engineering requirements used for nose cone material selection were the following:

- Weight: Measured in pounds and necessary to minimize to reduce overall airframe weight.
- Cost: Necessary to minimize to increase funding for all sections of the project.
- Strength: Necessary to maximize to reduce probability of nosecone failure while under launch loading conditions.
- Ease of Manufacturability: A qualitative measurement of the ease of dealing with the specific material
- RF Transparency: Necessary to maximize to allow for constant communication with the ground station.

Table 4-3: Nosecone Material Decision Matrix

Nosecone Material					
Design		Fiberglass		Carbon Fiber	
Requirement	Weight	Value	Score	Value	Score
Weight	7	8	56	10	70
Cost	4	6	24	2	8
Strength	8	7	56	10	80
Ease of Manufacture	9	7	63	7	63
RF Transparent	10	8	80	0	0
Total		**279**		**221**	

The nose cone will be under constant load and may experience deformation. Fiberglass and carbon fiber have different failure modes. Fiberglass will deform until ultimately breaking and carbon fiber will suddenly break. Having a functional nose cone is critical and while it is unlikely either material will fail, the failure mode of fiberglass is preferred since it is less likely to damage the components that it houses in the event of failure. The team is planning on manufacturing the nose cone, having a material that is easy to shape is desirable. Lastly, carbon fiber lacks RF transparency making it difficult for the avionics to operate. For these reasons, fiberglass was chosen as a material for the nose cone.

4.1.2.3. Nose Cone Tip

The tip of the nose cone will be made of aluminum. Manufacturing the nose cone to the desired curvature will be difficult around the tip area. The use of aluminum will allow for an easier manufacturing process and will also serve as an anchoring point for the internal subsystem.

The decisive requirement for the selection was that the material was easiest to manufacture. In comparison to steel and fiberglass, aluminum is the easiest to manufacture. The nose cone tip will be small; making the weight of the aluminum compared to fiberglass negligible. Aluminum can handle high compressive stresses making it suitable for the tip of the nose cone. The combination of manufacturability and properties suitable for the external forces make aluminum ideal for the nose cone tip.

4.1.2.4. Fins

The shape, thickness, and number of fins have all been decided. The primary considerations are the durability of the fins, the lift to drag ratio, and the ease of manufacturing. Table 4-4 below shows the decision matrix for fin shape design.

Table 4-4: Fin Shape Decision Matrix

Fin Shape							
Design		**Elliptical**		**Clipped Delta**		**Delta**	
Requirement	Weight	Value	Score	Value	Score	Value	Score
Lift to Drag Ratio	10	10	100	9	90	9	90
Durability	5	4	20	7	35	3	15
Difficulty of Manufacturing	8	4	32	7	56	7	56
Total		**152**		**181**		**161**	

The clipped delta shape was chosen for its superior durability and ease of manufacturing. The clipped delta fin has a small decrease in lift to drag ratio from the elliptical fin, but it is hard to manufacture the elliptical fin because of the smooth curves that are required. In addition, the clipped delta fin has an improved durability do to the fact that it does not have the small point sticking out from the body. The next decision to make is the thickness of the fin. Shown in Table 4-5 is a decision matrix for the thickness of the fin decision.

Table 4-5: Fin Thickness Decision Matrix

Fin Thickness							
Design		**0.125”**		**0.1875”**		**0.25”**	
Requirement	Weight	Value	Score	Value	Score	Value	Score
Drag ratio	6	8	48	6	36	3	18
Durability	5	4	20	6	30	8	40
Difficulty of Manufacturing	8	4	32	6	48	8	64
Total		**100**		**114**		**122**	

From Table 4-5, the best fin thickness as a combination of drag ratio, durability and ease of manufacturing is 0.25” for the rocket. This thickness has the greatest durability for the fins, and the increased drag ratio only lowers the projected altitude by 100 feet. The final aerodynamic consideration for the rocket is the number of fins. This is usually three or four fins for a rocket of this size.

Table 4-6: Number of Fins Decision Matrix

Number of Fins					
Design		**3 Fins**		**4 Fins**	
Requirement	Weight	Value	Score	Value	Score
Drag Coefficient	5	6	30	5	25
Difficulty of Manufacturing	5	5	25	8	40
Total		**55**		**65**	

Four fins were chosen because of the increased ease of manufacturing compared with three fins. It is much easier to align four fins because they are all at right angles compared with three fins. In addition, the added advantage of decreased drag from three fins is not very large due to the fin size having to be increased for the same center of pressure.

4.1.2.5. Bulkheads and Centering Rings

The bulkheads and centering rings will be made of the same material system, a Nomex core with carbon fiber layup on either side. This mixed material structure will provide a balancing of forces within the structural components. It will also be easier to manufacture than a solid carbon fiber or fiberglass bulkhead or centering rings. The rocketry teams at OSU have had experience with this build method, and success in execution, leading this to be an advantageous solution. Both bulkheads and centering rings can be made from the same material because they provide a structural function with similar parameters. If the different elements are of the same material format then the manufacturing process for the two will be the same, reducing the needed material and time. The parameters that were used for making the final decision on these components as described in Table 4-7 are:

- Strength: The structural strength of the component, to be maximized.
- Weight: Minimizing the weight of the components for final assembly.
- Manufacturing Difficulty: To be minimized.
- Cost: To be minimized.

This analysis led to the final decision of a carbon fiber and Nomex bulkhead. It will be easier to manufacture using the available facilities, particularly for placing the required hardware for avionics and recovery. The previous success means that there is little worry about failure of the bulkheads, while the pure fiberglass bulkhead strength has less data from previous tests. The centering rings would be very difficult to manufacture from pure fiberglass with the needed strength, but the sandwich method will give the required strength and stability needed.

Table 4-7: Decision Matrix for Bulkheads and Centering Rings

Bulkhead and Centering Rings							
Design		**Carbon Fiber Nomex**		**Fiberglass**		**Fiberglass Nomex**	
Requirement	Weight	Value	Score	Value	Score	Value	Score
Strength	8	10	80	8	80	8	64
Weight	6	6	36	4	24	5	30
Difficulty of Manufacturing	4	6	24	3	12	5	20
Cost	4	6	24	5	20	7	28
Total		**164**		**136**		**142**	

4.1.2.6. Couplers

The couplers will be made of pre-impregnated fiberglass. These couplers will be responsible for maintaining the structural integrity of the rocket during flight. These will primarily be bending moments because they will be holding the carbon fiber main sections of the rocket together and any bending of the rocket will be focused at the edges of the more rigid carbon fiber. These couplers will need to be manufactured to fit inside of the carbon fiber, and therefore the manufacturing will need to be precise to get the desired tight fit without damaging either component during assembly. The final decision to use pre-impregnated fiberglass was made after considering the following parameters:

- The structural strength of the coupler, considering the bending moments and axial loads created by the rocket in flight. The goal of the coupler is to maintain structural integrity during flight, therefore it must be as strong as possible.
- The ability to manufacture and modify the couplers is a major consideration in the material choice. If the material is hard to mold, then getting the need size become difficult and materials that are hard to machine makes final fitting a difficult proposition.
- The couplers will need to be of a lightweight design to maintain a lightweight rocket as they are a primary structural element, but the strength of the system is far more important.

A comparison of these factors between wet layup fiberglass, pre-impregnated fiberglass, and carbon fiber (pre-impregnated carbon fiber or wet layup having similar characteristics in this case) led to the conclusion that pre-impregnated fiberglass would be the best material for couplers (see Table 4-7). It is only marginally better than the carbon fiber, but the final decision has the advantage that the rocket teams at OSU have had experience working with fiberglass couplers and this makes the manufacturing process simpler. There is also the advantage that the fiberglass is RF transparent allowing for transmission if any avionics or recovery components are placed in the couplers in later designs.

Table 4-8: Decision Matrix for Couplers

Coupler							
Design		Wet Layup Fiberglass		**Pre-impregnated Fiberglass**		Carbon Fiber	
Requirement	Weight	Value	Score	Value	Score	Value	Score
Strength	8	7	56	7	56	8	64
Manufacturability	7	5	35	8	56	5	28
Weight	3	4	12	7	21	9	27
Total		**103**		**133**		**126**	

4.1.3. Leading Airframe Design

The leading airframe is a 5-inch-diameter 116-inch-long rocket with two recoverable sections. The rocket body is made from 0.05-inch-thick carbon fiber. The fully loaded weight of the rocket is 45.2 pounds and each recovered section will weigh about 20 pounds during the recovery phase. Figure 4-1 shows the breakup of the rocket into independent sections.

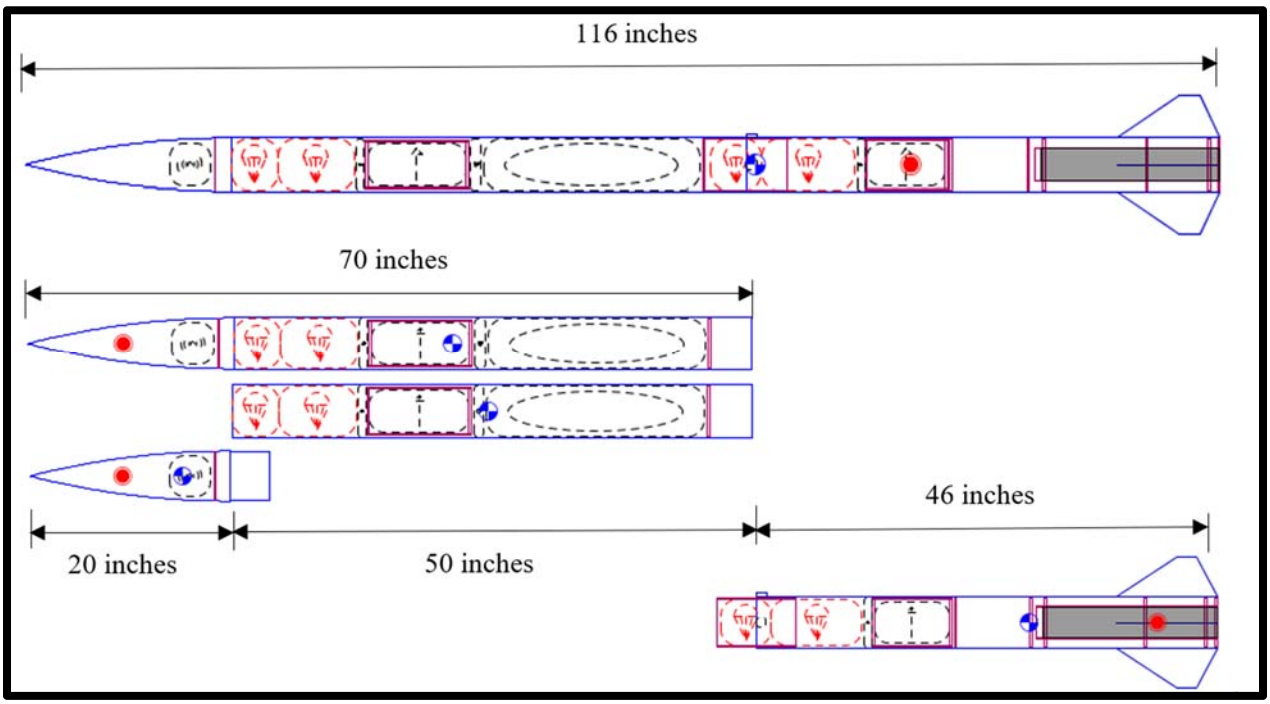

Figure 4-1: Leading Airframe Design

As the figure shows the rocket is recovered in two sections. This is done to limit the kinetic energy upon landing. The lowest section is the motor bay which contains the motor, fin can, lower telemetry bay, and the lower recovery system. The upper recovered section is split into two additional tethered sections. These are the nosecone and payload bay. The payload bay contains the payload, payload ejection, and upper recovery section. The nosecone contains the telemetry for the upper section.

The motor selected is the Aerotech L1420R-P reloadable motor. This motor weighs 10 pounds and uses 5.64 pounds of propellant. This motor was chosen because of its thrust properties in addition to its small size compared to motors of similar total impulse. The selection of an Aerotech was made because teams from Oregon State University have had a problem with motor availability with other manufacturers.

The fins selected are clipped delta fins with a 0.25-inch cross section. The selection of a larger than normal cross section was made because of the low necessary altitude and a strong emphasis on durability. The fins will be made with a Kevlar honeycomb interior overlaid with carbon fiber. For the leading edges of the fins G10 fiberglass will be used. Four fins will be used rather than three because of four fins being easier to align. The fins are expected to weigh a total of four ounces all together.

The lower avionics bay contains the lower telemetry and tracking section as well as the main and redundant altimeters and ejection controllers. This section will have an exterior antenna for the tracking signal to exit through the carbon fiber as well as the exterior arming switches for the ejection charges. This section is expected to weigh 2.5 pounds.

The recovery sections will both use single parachute compartments. This decision was made for increased control over the main parachute deployment. This decision also limits the number of bulkheads and separation charges that will be needed. In addition, this leaves the lower end of the payload bay open without any tethers or other rigging elements which will simplify rover ejection. The parachutes for each section are expected to weigh 2.5 pounds.

The payload bay will contain the payload as well as the locking and ejection systems for the payload. This section is located here so that the payload will be able to eject out the bottom of the main tube at landing when the lower section will be completely separated. This section is expected to weigh a total of six pounds.

The upper recovery section is identical to the lower recovery section except that instead of containing additional tracking systems the recovery bay will only have avionics. This section is expected to weigh 1 pound. The parachutes for the upper section are the same as the lower section and will weigh 2.3 per system.

The nosecone will be a fiberglass 4:1 ogive. This nosecone shape was chosen for its availability for purchase and its higher critical Mach value. Fiberglass is the material because the tracking system in the nosecone needs an RF transparent material. The nosecone will use an aluminum tip for the ease of manufacturing and its superior durability. The tracking system in the nose cone will contain the same tracking system as the lower section, but will utilize an interior antenna due to the use of an RF transparent material.

4.1.4. Motor Alternatives

The currently planned motor is the Aerotech L1420R-P. This selection was made primarily for the projected altitude. With this motor the rocket will reach an apogee of 5500 feet, as simulated by OpenRocket. The simulated altitude is higher than the target altitude, but this is a desirable factor as it is estimated that the weight of the rocket will become slightly heavier as design continues.

The decision was made based on a balance of the length, weight, total impulse and acceleration as detailed in Table 4-9**.** The engineering requirements used for motor selection were the following:

- Motor Length: The length of the motor affects the CG of the overall rocket, generally reducing stability with a longer motor so a shorter motor was desirable.
- Motor Weight: The weight of the motor was to be minimized because a heavier motor would reduce the gains made from the additional impulse that the larger motors tend to have.
- Motor Total Impulse: The total impulse was the most variable of the characteristics that was worked with because it could be changed to adjust the final attitude of the rocket.
- Maximum Acceleration: The acceleration of the rocket was a variable that was minimized to prevent damage to the onboard system during launch. The total impulse to get to the target altitude and the acceleration of the rocket was found using OpenRocket for simulations.

Table 4-9: Motor Decision Matrix

Motor (75mm)							
Design		L1170		L1390		**L1420**	
Requirement	Weight	Value	Score	Value	Score	Value	Score
Length	4	3	12	5	20	7	28
Weight	8	4	32	7	56	6	48
Total Impulse	6	5	30	5	30	9	54
Acceleration	3	6	18	4	12	4	12
Total		**92**		**118**		**142**	

The L1170 is a slower burning motor that provides an acceptable amount of impulse. This does not do enough to balance out the weight and length of this motor. The L1390 is a similar motor to the L1170, but it is lighter and shorter with more acceleration. This was an early consideration for the motor choice until the L1420 motor was researched. The L1420 was both slightly shorter and lighter than the L1390 and had a greater total impulse. This made the L1420 the better choice for the current rocket design.

All motor options are 75mm mount motors because the mounting fits neatly into the airframe and can be mounted securely. The decision was made to select motors manufactured by Aerotech, as OSRT was concerned about product availability from the other motor manufacturers.

4.2. Recovery Subsystem

4.2.1. Component Level Design

4.2.1.1. Number of Recovered Sections

The number of recovered sections refers to the number of sections which land untethered. A single recovered section would keep all the separate launch vehicle components tethered together during recovery. Fewer separation points are required on the rocket, which simplifies the structure of the airframe. Fewer ejection controllers are required, and a single telemetry unit is required, meaning the avionics and ground station development are greatly simplified. All the vehicle weight would land under a single set of parachutes, meaning a single section would decrease the size of the parachutes to meet the landing kinetic energy requirements set in the SL handbook. Increased parachute size also causes the packing volume to become more of a concern, and it is more difficult to achieve a controlled extraction and inflation of a larger parachute.

Multiple recovered sections would add increased complexity to the airframe, recovery system, and avionics. However, using multiple sections reduces the weight that each set of parachutes must support, which can simplify the parachute extraction. A higher landing velocity will also reduce the drift radius of the rocket. As mass (m) increases, landing velocity decrease proportional to $m^{-1/2}$, and the required parachute size increases proportional to m^2. If the weight increases too much, practical volume limitations and parachute availability may preclude a single section recovery, requiring multiple sections to be used.

The main engineering requirements for the number of recovered sections are used in Table 4-10 and are the following:

- Landing Kinetic Energy: The lighter the rocket section, the easier it is to stay under the required kinetic energy limits.
- Recovery Radius: Reduced weight increases landing velocity reduces the effective drift radius of the rocket during descent.
- Ease of Integration (Structures): More sections create more airframe parts and coupler tubes for structures to manufacture and assemble.
- Ease of Integration (Recovery): Additional sections require their own telemetry, ejection control, and parachute harness, which will double the work required for recovery.
- Ease of Integration (Payload): More sections can give payload ejection an advantage by putting the payload closer to an open end and by removing anything in the airframe blocking the exit.

Table 4-10: Recovery Section Decision Matrix

Recovered Sections					
Design		Single Section		**Two Sections**	
Requirement	Weight	Value	Score	Value	Score
Landing Kinetic Energy	10	6	60	10	100
Recovery Radius	7	6	42	8	56
Ease of Integration (Structures)	3	10	30	7	21
Ease of Integration (Recovery)	6	9	54	5	30
Ease of Integration (Payload)	5	5	25	7	35
Total		**211**		**242**	

Due to the landing, kinetic energy requirements imposed by the SL rules, a single recovered section was determined to be impractical for our current weight predictions, so the rocket will be recovered in two independent and untethered sections. The rocket currently has a projected spent weight of 37.6 lbs., which would require a landing velocity below 11.9 ft./s, and a main parachute larger than 12.5 ft. in diameter for a single section. A parachute that large would be more difficult to pack and is less likely to have a controlled deployment. Using two sections reduces the mass under each main parachute and allows for a greater landing velocity, which will reduce the size of the parachutes. The reduced size of the parachutes can offset the volume of the additional set of parachutes, and the higher velocity will reduce the effective drift distance. Both independent sections will have to contain their own set of ejection controllers and telemetry avionics.

4.2.1.2. Number of Parachute Compartments

Each untethered section is required by SL rules to land with a dual deployment system, using a drogue parachute at apogee and a main parachute, which deploys at a preset height above the ground.

A single-compartment stores both parachutes in one bay, and both parachutes are ejected from the rocket at apogee. A retainer is used to reef the main until it is deployed at a lower altitude. One compartment requires fewer coupler sections and bulkheads, which simplifies the airframe structure and can reduce the rocket weight. Few separation and ejection charges are needed, which will reduce the chance of damaging interior components. When the main parachute is deployed during the descent, it is already out of the rocket and the lines are fully stretched, meaning use of a single-compartment provides the best control over the main parachute inflation and produces the lowest peak recovery loads.

In the two-compartment configuration, each parachute is stored in a separate bay, each with its own set of separation and ejection charges. Because all deployment events occur within the rocket, ejection controllers can be housed entirely within the airframe. The bridle rigging is also simplified; each harness has only 2 attachment points, so no Y-harnesses or splitters are required. Each set of ejection charges has a lower mass to push out of the rocket, so the individual ejections are more reliable and require a lower amount of black powder.

The main engineering requirements for the number of parachute compartments are used in Table 4-11 and are the following:

- Inflation Control: Maximized as the higher control over the main deployment, the lower the peak recovery loads and the stresses are experienced by the payload.
- Extraction Control: Maximized extraction control results in reduced likelihood the parachute will get tangled during ejection and extraction.
- Ease of Integration (Structures): A single recovery compartment requires fewer bulkheads and couplers, making less work for structures.
- Ease of Integration (Recovery): A single compartment simplifies ejection controls, but can complicate the rigging required.

Table 4-11: Number of Parachute Compartments Decision Matrix

Number of Parachute Compartments					
Design		Single		Two	
Requirement	Weight	Value	Score	Value	Score
Inflation Control	8	9	72	8	64
Extraction Control	8	9	72	8	64
Ease of Integration (Structures)	4	8	32	8	32
Ease of Integration (Recovery)	6	9	54	7	42
Total		**230**		**202**	

A single recovery compartment per section will be used primarily for the improved control over main parachute deployment and reduced recovery loads, which will protect the payload during descent. It will reduce the number of bulkheads and separation charges required. The other primary advantage is that the fore untethered section, which houses the rover payload, can have an open end with no rigging or attachments to block the rover's exit from the rocket. This will greatly simplify the rover ejection while also keeping the total number of sections under the maximum of four as defined by the SL rules.

4.2.1.3. Canopy Shape

The canopy shape must be selected before the size can be calculated. Spill-holes reduce cupping, an inconsistent descent velocity caused by changing airflow through the parachute, and reduce the final pack volume of the parachute with minor sacrifice in drag force, so only shapes with spill-holes are considered.

Elliptical canopies, as seen in Figure 4-2, have the shape of a bisected hollow sphere with a circular cross section. The canopy has a coefficient of drag between 1.5 - 1.9. Elliptical canopies typically have twelve shroud lines of equal length, and they are only attached to the outer diameter, which significantly reduces the chance of entanglement during deployment. They are many commercially

Figure 4-2: Elliptical Canopy

available options, and manufacturing guides are readily available online.

A semi-elliptical canopy has the same rigging as an elliptical canopy, but the cross-sectional area is in an ellipsoid instead of a circle. They provide approximately the same drag as an elliptical canopy of equivalent outer diameter, with a reduced fabric area and weight. There are no pre-fabricated options, but one manufacturing guide is available.

A toroidal canopy, as seen in Figure 4-3, has a similar shape to an elliptical canopy with a circular cross-section and an inner spill-hole. The inner spill-hole of a toroidal canopy has a second set of shroud lines, which anchors the apex of the parachute, applying load to the center and flattening the shape to increase drag. Toroidal canopies have a coefficient of drag between 2.2 - 3.2. The additional shroud lines increase the chance of parachute entanglement during deployment compared to elliptical canopies. The increased drag allows for a smaller parachute to be used for same weight compared to elliptical and semi-elliptical canopies, which will also decrease the final packing volume and parachute weight.

Figure 4-3: Toroidal Canopy

The main engineering requirements for the canopy shape are used in Table 4-12 and are the following:

- Coefficient of Drag: As the coefficient of drag increases, a smaller parachute can be used, which make integration with structures and recovery easier.
- Entanglement Susceptibility: For reliable extraction and inflation, the parachute should have reasonable resistance against entanglement, based on suspension line configuration.
- Pack Volume: For shapes with similar drag coefficients, the shape with the lowest pack volume is preferred.
- Commercial Availability: Selected shape should be readily available from a reputable vendor.

Table 4-12: Canopy Shape Decision Matrix

Canopy Shape							
Design		Elliptical		Semi-Elliptical		Toroidal	
Requirement	Weight	Value	Score	Value	Score	Value	Score
Coefficient of Drag	10	5	50	6	60	9	90
Entanglement Susceptibility	8	9	72	9	72	6	48
Pack Volume	10	3	30	6	60	9	90
Commercial Availability	4	9	36	4	16	9	36
Total		**188**		**208**		**264**	

The toroidal canopy shape was selected for the main parachutes. The increased coefficient of drag compared to other parachutes reduces the required parachute area, which decreases both the pack volume and final weight. Since the main parachutes are being inflated outside

of the rocket with a single compartment recovery, the increased risk or entanglement with toroidal parachutes during deployment is not a concern.

Elliptical canopies will be used for both drogue parachutes. Small toroidal canopies are not readily available and must be custom made, meaning elliptical canopies will be cheaper and easier to source. The drogue deployment is also not as well controlled as the main parachute, thus using a parachute with simpler rigging will be more reliable and decrease the chance of tangles. Since the drogue parachutes are much smaller than the main, the change in pack volume between a toroidal and elliptical parachute is negligible.

4.2.1.4. Bridle Material

The bridle is the line that tethers the sections to each other and to the parachutes. It must support all recovery loads and can withstand the heat of the ejection gasses.

Nylon is light and had a decent strength to weight ratio. It has a high elasticity, which reduces the impact on the airframe and components by acting as a spring/damper. It is also less abrasive, which can cause less damage to the airframe from sliding and can reduce the likelihood of zippering. Nylon has poor thermal characteristics and is susceptible to damage and fatigue from the recovery gasses.

Kevlar has a higher strength to weight ratio than Nylon, but a much lower elasticity, which can create more stress on the airframe and components. It is also thinner for the same yield strength, which increases the chance of zippering. Kevlar is thermally resistant, so it can withstand the ejection heat without any further protection.

The main engineering requirements for the bridal material are the following:

- Elasticity: A higher elasticity is preferred to prevent damage to the airframe and payload.
- Softness: The material should cause minimal damage to the airframe during recovery.
- Thermal Resistance: The material should be thermally resistant, or be able to be thermally protected.

Nylon webbing will be used for all bridle lines for its increased elasticity and wider sizing compared to Kevlar. This will reduce impact forces on rocket components during the recovery and help prevent zippering. This is important since in the current configuration both drogue parachutes eject in the forward direction. Nomex and Kevlar protectors will be used to protect against thermal damage where necessary.

4.2.1.5. Packing Method

The packing method refers to the way in which the parachute is stowed during flight. Packing density, the weight of the parachute per cubic inch, is dependent on only the packing method and not the final parachute size or shape.

Fold-and-wrap is the most common method used in low-powered rockets. The parachutes are folded up with the rigging lines wrapped around them, and placed into the rocket with no further deployment devices. Furthermore, fold-and-wrap is the simplest method of packing, and at 0.13 oz/cu. In., it also has the lowest density. It is the fastest method to do in the field, but it can be easy to mispack the parachute and cause a tangled deployment. The additional free-space in the recovery compartment can cause further chances or entanglement, and the inconsistent nature of the deployment can cause increased snatch loads.

Deployment bags are used to achieve a higher packing density without the need for specialized tools. A deployment bag consists of a main compartment which holds the canopy, and outside webbing to stow the bridle and rigging as seen in Figure 4-4. A deployment bag can reach a pack density of 0.16 – 0.20 oz/cu. in. depending on the fit of the bag, which can make packing a larger parachute into the airframe easier. They also have the advantage of creating a controlled deployment – the bags allow the rigging to stretch before inflating the parachute – which significantly reduces the chance of entanglement. The delayed inflation reduces the maximum loads on components during recovery, and the Nomex material provides extra thermal protection from ejection charges.

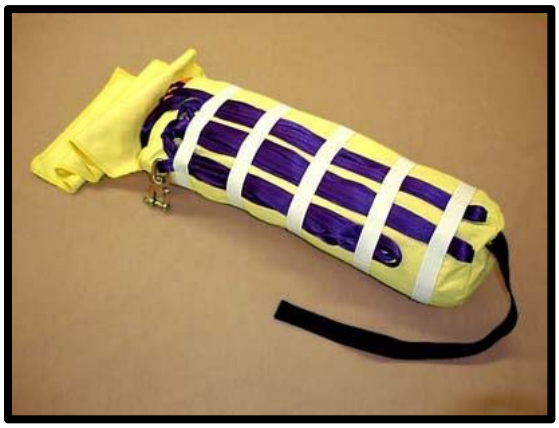

Figure 4-4: TAC Deployment Bag

A pressure pack is an integrated system comprised of a sealable canister, a pressurized ejection gas, and a firing system. Using a force around 15 psi, it is possible to pack the parachute in the canister to pack densities as high as 0.28 oz/cu. in. The high-pressure ejection system also allows for a reliable deployment, and parachute retainers can be used to control the timing of the parachute inflation like with deployment bags. Although there are a few commercial options, any system would require custom made parts which would be more difficult to integrate into airframe. Since the parachutes are exposed directly to the ejection gasses, black powder would cause too much damage to the components and CO2 or a similar method would be required. Specialized tools are often also necessary to pack the parachute and it can take significantly more time than other packing methods.

The main engineering requirements for the packing methods are used in Table 4-13 and are the following:

- Packing Volume: Reduced packing volume makes integration with structures easier and allows for a larger variety of deployment configurations.
- Deployment Reliability: Deployment reliability encapsulates the extraction control and deployment control; the preferred method will create the lowest peak loads while offering the greatest consistency in deployment.
- Packing Time: Time to pack the parachutes should be minimized to allow the rocket to be re-launched in the field.
- Ease of Integration: A packing method which does not require modifications to the existing airframe or recovery system is preferred.

Table 4-13: Packing Method Decision Matrix

Packing Method							
Design		Fold and Wrap		Deployment Bag		Pressure Pack	
Requirement	Weight	Value	Score	Value	Score	Value	Score
Packing Volume	8	3	24	6	48	9	72
Deployment Reliability	10	5	50	8	80	10	100
Packing Time	4	9	36	7	28	1	4
Ease of Integration	6	9	54	7	42	1	6
Total		**164**		**198**		**182**	

A deployment bag was selected for use on all four parachutes, both to reduce the final packing volume and to improve deployment control. Pack-and-fold was determined to be too unreliable, and the challenges of using a pressure pack outweighed its benefits. Using a deployment bag will make fitting the parachutes into the airframe easier, and will help to reduce the recovery loads on the launch vehicle.

4.2.1.6. Altimeter

The NASA USLI rules require the recovery ejection controller to use a commercially available altimeter. To minimize the amount of design required and to reduce the number of failure points, only altimeters with onboard controllers, which can directly activate the ejection, were considered. All altimeters also contain a method to verify the maximum altitude via a series of beeps or an LED display, which will fulfill the SL requirements for a scoring altimeter.

The Featherweight Raven3 determines ejection conditions based off a combination of an accelerometer to detect free-fall and a barometric sensor to detect a descending altitude. It has 4 outputs per altimeter, which can be triggered based on a variety of altitude, speed, and timing conditions. It also offers the most versatility in terms of implementation and is the smallest altimeter considered. Despite the benefits associated with this altimeter, past USLI teams have had issues with the Raven3, a system known to have some reliability issues.

The Missile Work RRC3 altimeter shown in Figure 4-5 determines ejection conditions based off a barometric altimeter alone. It offers a built-in recording unit, and has three programmable outputs. There are fewer programing options than the Raven3, but enough that it will be sufficient for the system. There is also an I/O interface to communicate with a slave controller that transmits flight data to the ground station. The RRC3 has been used in many high-powered rocketry projects with an excellent reliability record.

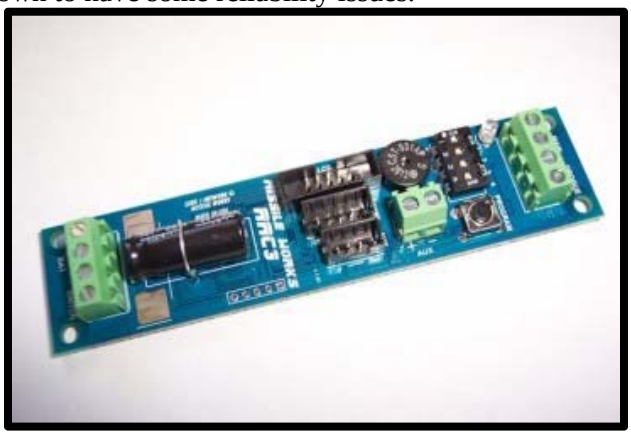

Figure 4-5: Missile Works RRC3

The StrattoLogger CF has similar functionality to the RRC3 in that it uses only barometric pressure sensing and has limited programming options. It has a reliability record on par with the RRC3, but only offers two programmable output interfaces per controller.

The main engineering requirements for the number of recovered sections are used in Table 4-14 and are the following:

- Reliability: Since ejection and separation are wholly dependent on the altimeters, the consistency of performance and the reliability of the control algorithm is the primary concern.
- Sensitivity: Since multiple recovery events will happen in quick succession, adequate sensor sensitivity is required to ensure proper timing.
- Programmability: More programming options and additional outputs add adaptability to the system, offering more accurate sequence control and allowing for further functionality to be added if required.

Table 4-14: Ejection Altimeter Decision Matrix

Ejection Altimeter							
Design		Missile Works RRC3		Raven3		Stratologger CF	
Requirement	Weight	Value	Score	Value	Score	Value	Score
Reliability	10	9	90	7	70	9	90
Sensitivity	8	9	72	8	64	7	56
Programmability	6	7	42	9	54	6	36
Total		**204**		**188**		**182**	

The Missile Works RRC3 altimeter is the selected system for its excellent reliability record and the availability of three outputs per controller. Both the RRC3 and StrattoLogger have similar reliability statistics, but the RRC3 was chosen for its extra output channel and ability to communicate with the telemetry units. Neither the forward or aft ejection controllers require three outputs in the current design, but an extra output is desired in case extra functionality or interaction with the payload ejection is required in later designs.

4.2.1.7. Main Parachute Retainer

If a single-compartment recovery configuration is selected, a retainer is required to keep the main parachute reefed until it is deployed at a lower altitude. The Jolly Logic Chute Release, as seen in Figure 4-6, is a standalone electric controller which is wrapped around the main parachute and is released at a pre-set altitude. It is simple to program, can be easily ground tested, and has been used successfully by several past USLI team. A standalone unit, it does not require any interfacing with the avionics or ejection controllers, and no additional attachments or modifications are required. Redundancy can be added by connecting two Chute Releases to each other in a way that if one of them is activated the main is deployed.

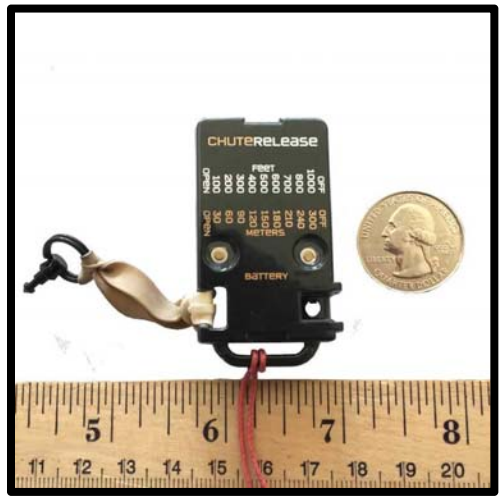

Figure 4-6: Jolly Logic Chute Release

The Defy Gravity Tether, as seen Figure 4-7, is a retaining device that is released by a pyrotechnic charge activated by the recovery electronics. The tether has slots for two quick links that can be used to secure the main parachute in a deployment bag or inside the airframe. When activated, the quick links separate and the main can unfurl. Since the onboard ejection controllers activate the Tether, the structure would have to be modified so that either the wires for the pyrotechnic charge or the shock cords for the retention could pass through the bulkheads. Redundancy can be added by connecting the retaining cord through two Tethers, so that when one is activated the main can slide free.

Figure 4-7: Defy Gravity Tether

The Tender Descender parachute retainer is functionally the same as the Defy Gravity Tether with a different manufacturing style. The Tender Descender body is made from plastic instead of aluminum, and cannot support as large of a load. It is included here as an alternative because it has been available for a long time and has a reputation for being a reliable system, as opposed to the Tether, which is a recent product.

The critical engineering requirements for the main parachute retainer are used in Table 4-15 and are the following:

- Controllability: Describes the level of control over event timing that is available. An increase in controllability allows for more adaptable systems.
- Ease of Integration (Structures): A system, which does not require an electrical connection to the ejection controllers or any additional attachment, is preferred.
- Ease of Integration (Recovery): The more interfacing required with the current recovery system, the more difficult it will be to integrate.

Table 4-15: Parachute Retainer Decision Matrix

Parachute Retainer							
Design		Jolly Logic Chute Release		Tender Descender		Defy Grav Tether	
Requirement	Weight	Value	Score	Value	Score	Value	Score
Controllability	7	7	49	9	63	9	63
Ease of Integration	5	10	50	5	25	5	25
Durability	5	9	45	7	35	9	45
Total		**144**		**123**		**133**	

The Jolly Logic Chute Release has been as the parachute retainer system selected for its reputation as a reliable product and that it does not require interfacing with other avionics components. It will be easy to program, and cannot be affected by any other electrical failures. It also does not require any modification to the airframe or bulkheads, which simplifies manufacturing and assembly.

4.2.1.8. E-Matches

The e-matches are responsible for igniting the black powder used for separation and ejection. They are wired directly to the altimeter outputs, with each e-match connected in series if multiple charges are used.

The Firewire Initiator is one of the most commonly used e-matches in civilian rocketry. It has a nominal firing current of 1.0 amps and includes 36” leads. It is limited to four e-matches in series, meaning a maximum of four separate charges can be used per ejection event. The Firewire Initiator is the only e-match which is available for purchase without an ATF license.

The J-TEK3 is a more robust e-match than the Firewire, with a slower and hotter ignition for a better combustion. Each requires 1.25 amps and, although they can be wired with more than four in series, the maximum current from the altimeters will limit the system to four series connected J-TEK3 matches. Although they are superior to the Firewire e-matches, they can only be purchased with the proper ATF permit.

Firewire Initiators were selected mainly due to ATF restrictions on other e-matches. Using a maximum of four separate charges is not an issue, and the charges are all small enough that a higher performance match would make little difference.

4.2.1.9. Arming Switch

The arming switch connects the altimeters to the power supply and arms the ejection system. Per SL requirements, the switch must be accessible from the rocket exterior, and must be capable of being locked in the ‘on’ position.

The Apogee Components Rotary Switch is a 220VAC industrial power switch that has been repurposed for rocketry. It is the most mechanically robust option, and is flipped with a flat-headed screw driver. To be accessed from the exterior, a 1/4” hole must be made through the airframe for the screwdriver or the switch must be mounted to the exterior to expose 5/8” of the switch surface. Either option would cause additional drag to the rocket and could affect the stability

The FingerTech Mini Power Switch is also a rotary power switch, but it is activated using a 3/32” hex wrench. It is smaller than the Rotary Switch but has an all metal construction, so it should be equally robust though more difficult to mount. It can be mounted flush to rocket

interior with an 1/8" hole through the airframe to use the wrench, which would create less drag than the Rotary Switch.

The Featherweight Magnetic Switch uses a hall-effect sensor connected to a normally closed relay. A magnet is placed on the exterior of the rocket to break the power contact, and when the magnet is removed the altimeters are connected to their batteries. RF interference could possible trigger the sensor and break the contact, so it is not as reliable as a mechanical switch. Since no modifications are required to the airframe, this switch would not affect aerodynamic performance.

A mechanical switch was determined to be the most reliable option, therefore the FingerTech Mini Power switch was selected due to its robustness over the Featherweight magnetic switch and reduced aerodynamic effects compared to the Apogee switch.

4.2.1.10. Ejection Charges

Black powder is the most common material used to eject the parachute and recovery systems, and provides a very strong explosive force. To contain the black powder until ignition, several charges will be put into surgical tubing, the ends of which are closed via zip-ties. These zip-ties will be mounted to the bulkhead, either with more zip-ties, or with small aluminum fixtures. There are significant issues with black powder that need to be addressed. According to J. Jarvis, a writer for Rocket Magazine in his article "High Altitude Deployment", black powder has a tendency not to combust completely due to the lower oxygen content in the air at higher elevations. This occurs mainly at elevations our rocket should not reach, but it can be of concern if the powder charge is small enough. To combat this, it is possible to contain the black powder charge inside of a sealed tube containing enough air with a higher oxygen content to achieve a fuller combustion. According to the ARLISS-M Design Guide, black powder creates large G-forces that can upset any sensitive electronics. The benefits of black powder lie primarily in its simplicity of design and use. It is also generally more reliable than carbon dioxide and it does not require a large volume of space for CO_2 cartridges.

Carbon dioxide does have is benefits. It provides less of an impulse to the system when released, and does not create damaging explosive gasses. Some sensitive electronics may be damaged by the corrosive and noxious gasses black powder releases. To keep the entire rocket system as simple and as reliable as possible, black powder is the more likely of the two candidates. There are no extremely sensitive electronics attached to the rocket, and by orienting the avionics section away from the blast chamber, the damage can be minimized. CO_2 systems require more complex assemblies and adds additional work to integrate into the rocket. The critical engineering requirements for the main parachute retainer are used in Table 4-16 and are the following:

- Pressure Created: sufficient pressure must be generated to separate the shear pins and eject the parachutes
- Reliability: since ejection is critical for recovery, the selected system must perform consistently and reliable
- Possible Damage: too much pressure or heat can damage interior components or the recovery system
- Cost: since many charges will be required for testing, a low-cost system is preferred
- Volume Required: the amount of volume for the ejection system must be minimized

Table 4-16: Parachute Ejection System Decision Matrix

Parachute Ejection System					
Design		Black Powder		CO2	
Requirement	Weight	Value	Score	Value	Score
Pressure Created	3	3	9	2.5	7.5
Reliability	3	4	12	1	3
Possible Damage	1	1	1	4	4
Cost	1	4	4	2	2
Volume Required	2	5	10	2	4
Total		**36**		**20.5**	

Black powder will be used for the ejection charges since it is the most reliable and commonly used method, and requires little work to integrate. Black powder charges are not liable to leak, are easily set off, and do not require large amounts of supporting equipment. Black powder is cheap and easily accessible. Possible damage to interior systems will be mitigated using thermal shielding and thermally resistant materials.

4.2.2. Recovery System Sizing

4.2.2.1. Parachute Sizes

All parachutes and rigging from a reputable vendor instead of attempting to manufacture our own system. Since the team has limited fabrics experience, this was determined to be the most reliable option.

A Fruity Chutes Iris Ultra Standard, which is toroidal in shape, was selected for the main parachutes, and a Fruity Chutes Classic Elliptical was selected for the drogue parachutes. Both are constructed from 1.1 oz rip-stop Nylon, include all suspension lines, and have a top loop for easy integration with a deployment bag.

The projected weight of the fore section is 18.0 lbs., and the projected weight of the aft section is 17.6 lbs. The terminal velocity the main parachute is determined by the landing kinetic energy requirements as calculated in Equation 4-1 Equation 4-2:

$$\frac{1}{2}mv_{main}^2 \leq KE_{max} \qquad \text{Equation 4-1}$$

$$v_{main} \leq \sqrt{\frac{2KE_{max}}{m}} \qquad \text{Equation 4-2}$$

The main parachute terminal velocity must be lower than 16.55 ft/s for the fore section and lower than 15.53 ft/s for the aft section.

The terminal velocity for a given parachute size can be determined from the mass it supports, the air density, and the coefficient of drag.

The terminal velocity for available Iris Ultra and Elliptical sizes are plotted for each section in Figure 4-8 and Figure 4-9. The main parachute velocities do not account for the additional area of the drogue parachute. A ground level of 1900 ft, the average altitude of Marshal Space Flight Center, is used. The terminal velocity of both parachutes was calculated at their

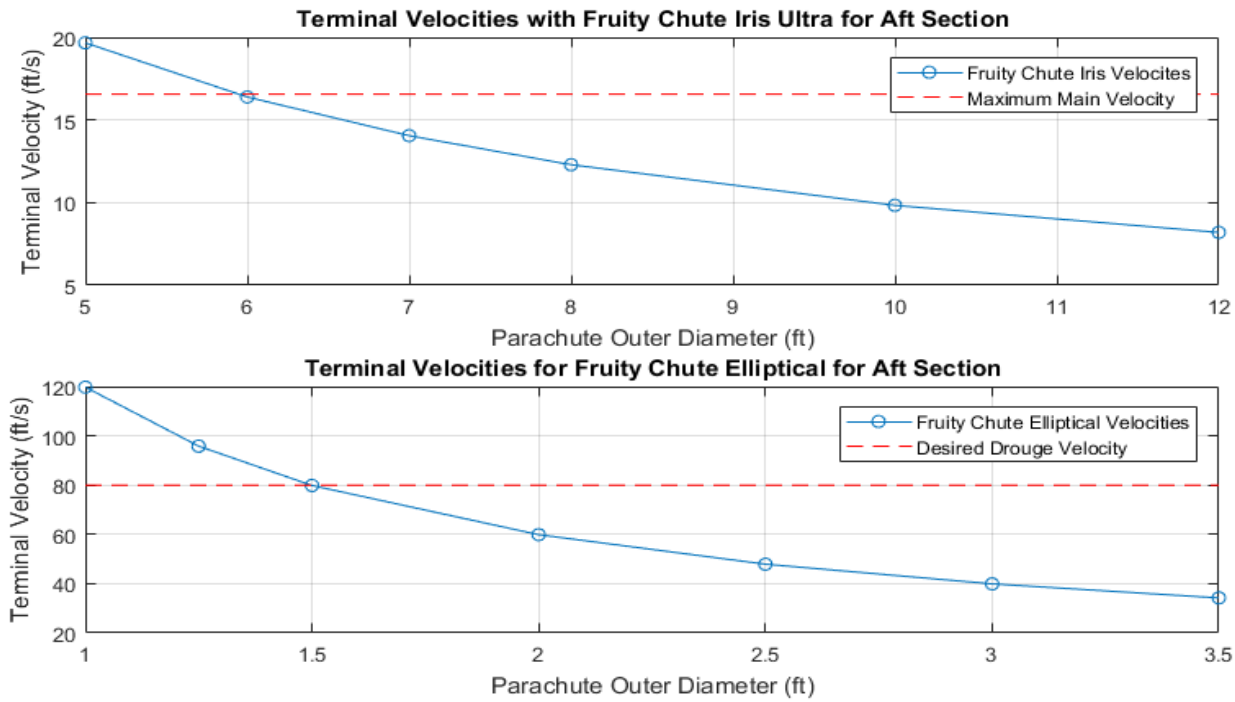

Figure 4-8: Terminal Velocity Plot for Aft Section

respective deployment altitudes. Since the rocket will land in air denser than used in calculations and with a larger area (accounting for both parachutes), the actual landing velocity will be slightly lower than predicted.

The parachutes were first sized, the weight of the parachutes added, and the new terminal velocities calculated. This iterative process was continued until a parachute size was found which could slow the rocket weight and parachute weight below the required KE limitations. The sizes selected, their terminal velocities, and landing energies are listed below. Landing velocity accounts for the drag from both parachutes.

Table 4-17: Parachute Selected Sizes

Section	Main Outer Diameter	Drogue Outer Diameter	Main Terminal Velocity	Drogue Terminal Velocity	Landing Velocity	Landing Kinetic Energy
Fore (20.3 lbs)	8.0 ft	1.0 ft	13.20 ft/s	128.61 ft/s	12.97 ft/s	54.97 ft-lbf
Aft (19.9 lbs)	8.0 ft	1.0 ft	13.07 ft/s	127.34 ft/s	12.84 ft/s	51.05 ft-lbf

Each set of parachutes adds a weight of ~ 2.3lbs to each section, giving the fore section a final weight of 21.3 lbs and the aft section a final weight of 19.9lbs.

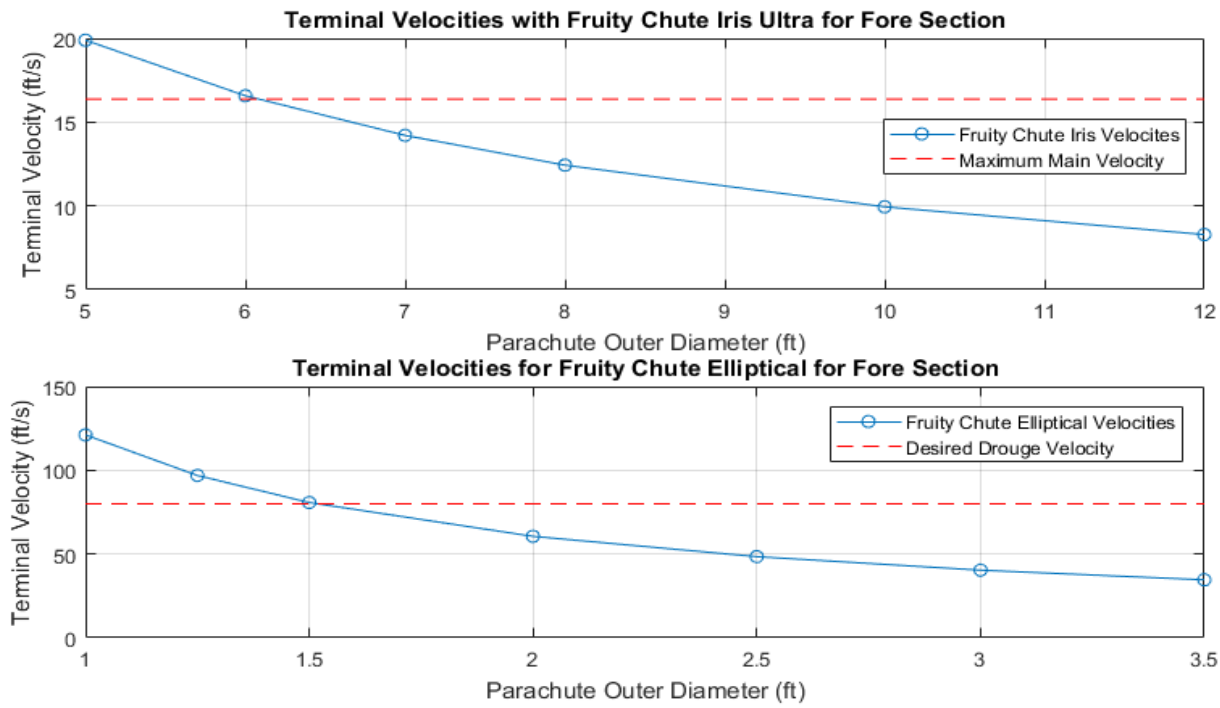

Figure 4-9: Terminal Velocity Plot for Fore Section

4.2.2.2. Ejection Charge Sizes

To calculate an approximate charge size for this rocket design, Equation 4-3 can be used, courtesy of Rouse-Tech's CD3 Instruction Manual. This equation is useful for approximating FFFF black powder charge size.

$$W_p = \frac{P * V}{R * T} \qquad \text{Equation 4-3}$$

Where P is the ejection charge pressure, R is the combustion gas contestant 22.16 (ft-lbf/lbm R), T is the combustion gas temperature 3307 R, and V is the free volume in cubic inches. The length of the free volume is about 24 inches, and the outer diameter is 5 inches. A typical ejection charge needs to be about 15 psi, according to Rouse-Tech's CD3 Instruction Manual. The resultant weight of black powder required is 0.08 ounces. Similar calculations using the HART Rocket club ejection size calculator result in 0.125 ounces of black powder being required.

These numbers will be used as a starting point, and through ground testing the actual amount required will be selected. The back-up set of charges will contain 130% the weight of black powder that the primary set of charges contains.

4.2.3. System Layout

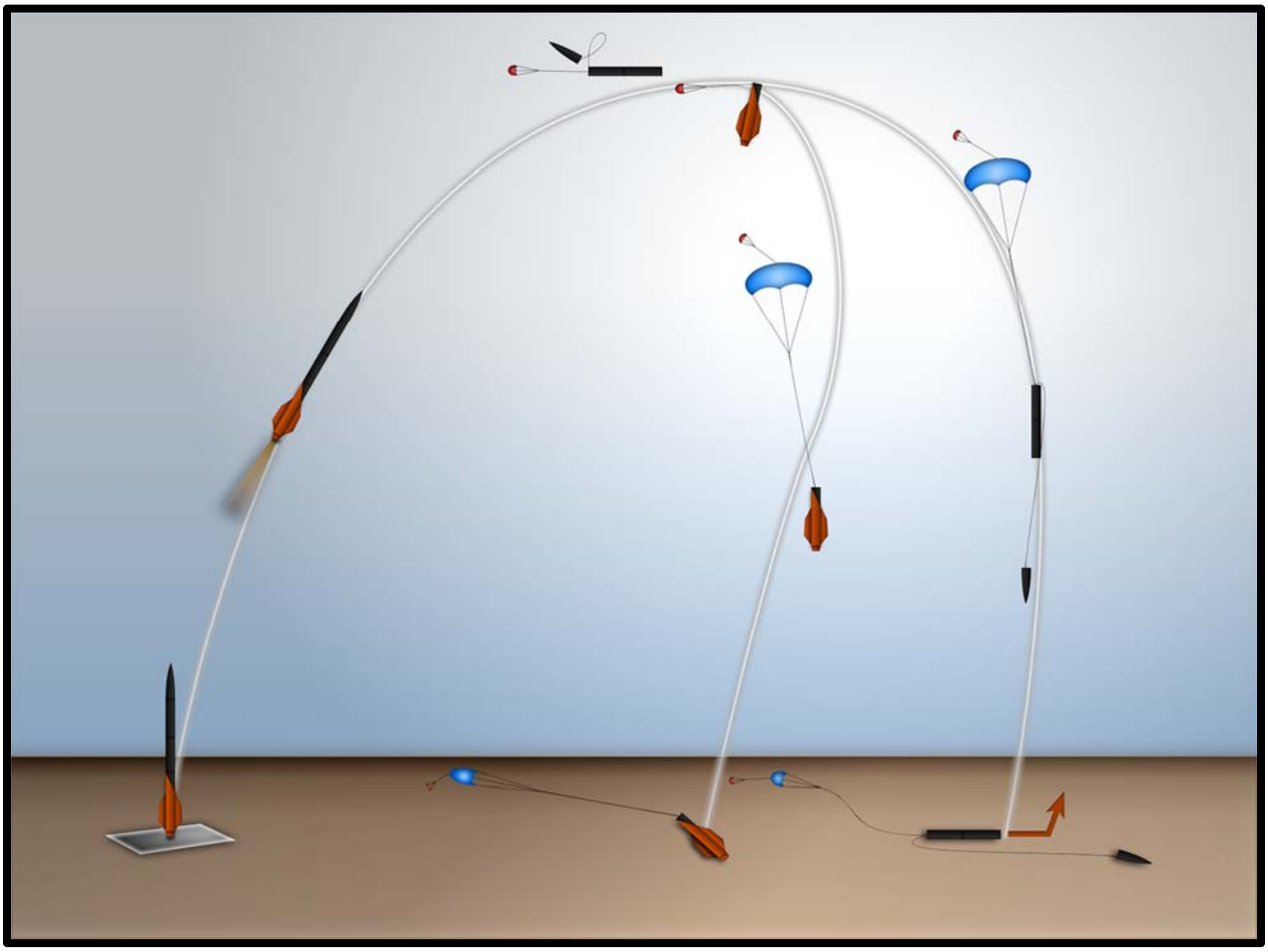

Figure 4-10: Recovery System Timing and Event Diagram

The major events of the recovery system are shown in Figure 4-10. The rocket is split into two independent sections for the recovery: the aft section holds the motor canister and the fin assembly, while the fore section contains the payload and nose cone. The section containing the payload will be open ended, with minimal distance between the payload and open end, to ensure payload ejection is as simple as possible.

Ejection controllers will be housed in a container separate from any other electronics and stored directly next to the bulkhead which contains the charges the ejection controllers activate. The housing will be covered in a conductive copper tape to shield it magnetically. A set of static ports through the airframe will be made for each set of altimeters to ensure accurate altitude sensing.

At apogee, the fore and aft sections are separated by ejection charges which are located above the motor bulkhead and controlled by the aft ejection controller. This deploys the aft drogue parachute while keeping the fore section intact, which allows the two sections to drift apart and avoid collisions. At 1 second past apogee, the forward ejection controller separates the fore section and deploys the drogue parachute.

Research showed that drogue parachutes for rockets are usually designed for a terminal velocity between 75-150 ft/s. A drogue velocity on the low end of 80 ft/s was selected to minimize the loads on the rocket during the main deployment. If analysis shows that this causes too large of a drift distance a higher velocity will be used.

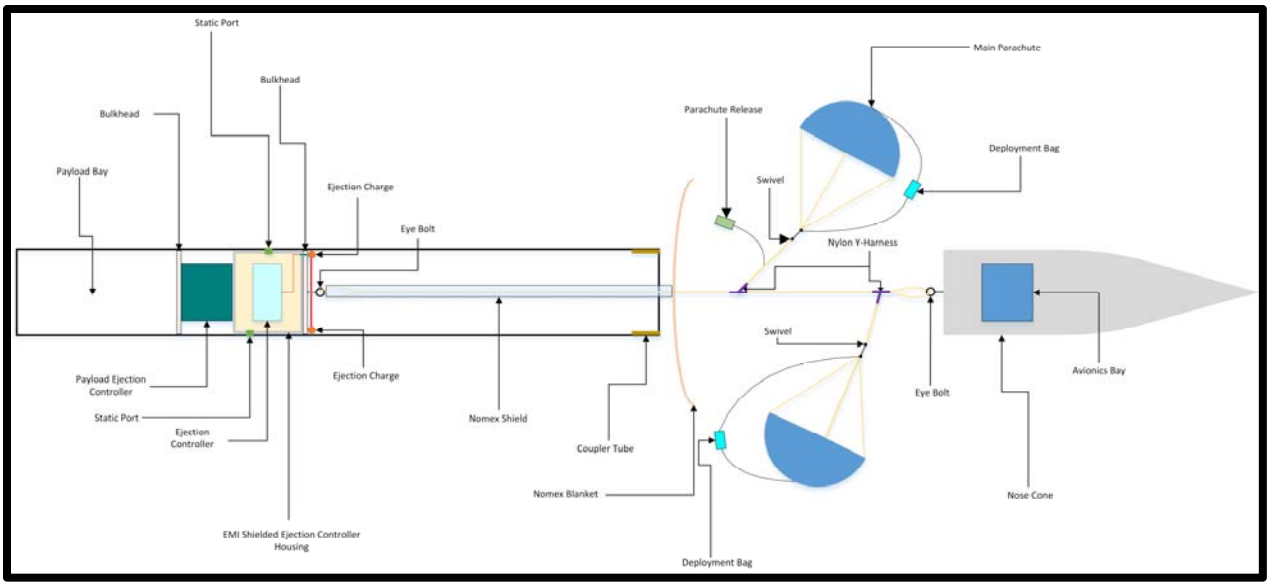

Figure 4-11: Fore Section Recovery System Layout (Not Shown to Scale)

Both sections fall under the drogue until they reach a height of 1000 ft. AGL, where the Jolly Logic Chute Releases activate the main parachutes. A main deployment height of 750-1500 ft AGL is typically used. Since the mains are already out of the rocket and the lines are stretched when the parachutes are released, main deployment happens rapidly in a short altitude drop. Because of this, a lower main deployment height was selected to minimize the drift distance.

The fore section recovery system layout is shown in Figure 4-11. The harness consists of an eyebolt on both the nose cone and the payload section, two nylon Y-harnesses separated by a bridle line which is three times the length of the payload section to prevent collision between the two sections. One end of the Y-harness near the payload section will attach to the main parachute, and the Y-harness by the nose cone will attach to the main parachute. In this configuration, the nose cone will impact the ground before the payload section. The nose cone will have an aluminum tip which is more impact resistant than the carbon fiber of the payload section, and it is believed that by the payload section landing second, the chances of it getting stuck in the ground will be reduced.

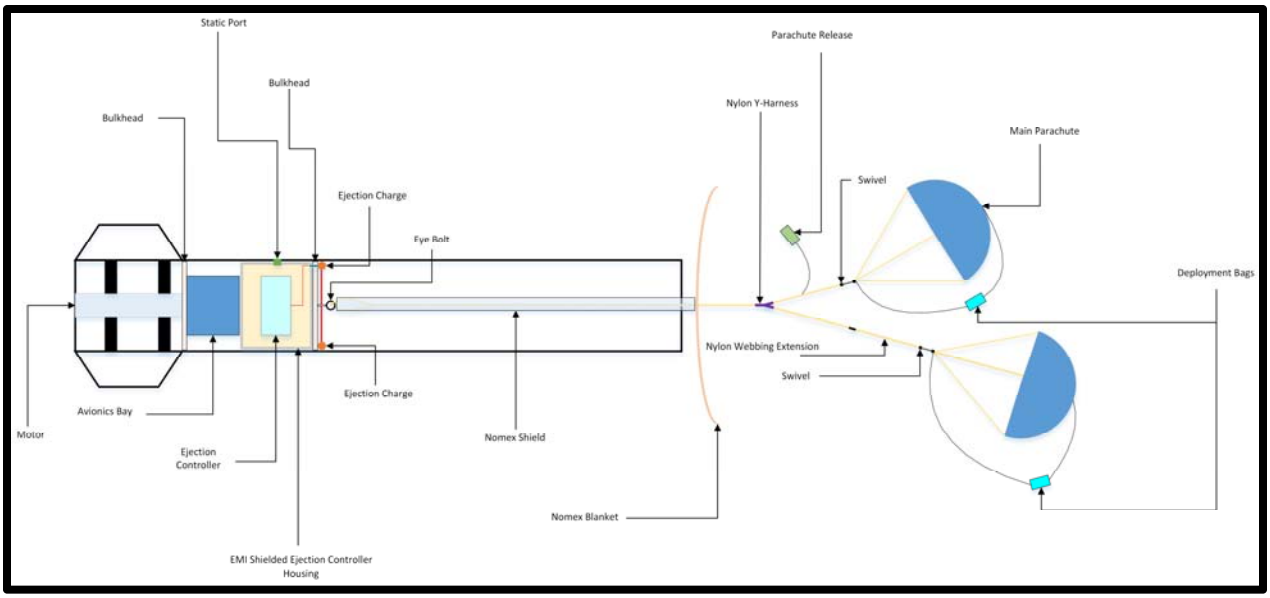

Figure 4-12: Aft Section Recovery System Layout (Not Shown to Scale)

The section recovery system layout is shown in Figure 4-12. The harness consists of a single eyehook attached to a Nylon bridle line twice the length of the aft section, which extends out into a Y-harness. Both the drogue and the main parachutes are attached at either end of the harness. The drogue parachute will be placed further away from the Y-harness to prevent collision between it and the main when both are open. This will also place the main below the drogue before it is deployed, which will keep it in consistent air-flow for a more reliable inflation.

To provide protection from the black powder charges, the lower 3 feet of the Nylon harnesses closest to the ejection gasses will be covered with a thermal resistant Nomex sleeve. A Nomex blanket will also be placed between the ejection charges and the other recovery components, and a Nomex cover placed on every Chute Release. To mitigate the chance of any of the parachutes becoming tangled during descent due to twisting, all parachutes will be mounted with a swivel between the bridle lines and suspension lines.

4.2.4. Redundancy

Redundancy is provided by using duplicates of all ejection controllers. Two altimeters will be used in each section, and each will be powered off independent batteries. The primary altimeter will be connected to the primary ejection charges and will operate normally. The back-up altimeter will be set for a short time delay, and will be connected to the secondary set of ejection charges, which are larger than the primary. If the primary altimeter or charges fail, the pressure from the second charges will be greater than the primary, making it more likely to separate properly at the risk of damaging interior components. If the primary system operates as intended, the compartment will be open when the secondary charges fire and over-pressure will not be an issue.

To add redundancy to the Chute Releases, two units will be used on each main parachute. They will be attached to one another so that if either controller activates, the loop is opened, and the main parachute can unfurl. Since there are no risks associated with both controllers activating at the same time, they will be programed identically.

4.3. Avionics

As defined in the USLI handbook, there must be an electronic tracking device that will transmit the position of the tethered vehicle or any independent section to a ground receiver. Additionally, all recovery electronics must be independent of any other electrical subsystem onboard the rocket. This includes the altimeter system used to record altitude as well as the electrical systems of the payload. OSRT's solution to this is a standalone GPS and RF transceiver that will be utilized to receive and transmit the position of the rocket for the duration of the flight. GPS was chosen as it provides the best performance at the lowest cost. The maturity of the technology will ensure that the system will be stable and reliable under the extreme environmental conditions that the system will be subject to.

Due to the prevalence of GPS in the U.S. and the superior accuracy over alternatives such as GLONASS, Doris, and Beidou it was chosen as the positioning and location system of choice. Additionally, GPS receivers are low cost low power solutions that satisfy the size constraints of the rocket. High-level design considerations that defined the avionics and positioning system included the size, weight, flexibility, reliability, ease of implementation, as well as satisfying the electrical requirements that pertain to continuously transmitting GPS coordinates wirelessly. These include low power consumption by the system while still being able to transmit over long distances, accurate positioning with low time to first fix to ensure accurate flight data, and designing a system small enough to fit in the nosecone of the rocket. GPS coordination protocol requires a master transmission station to set the satellite time in order to coordinate satellites relative to their orbit. Current time is then transmitted to the user on earth who triangulates the position based on the time information received by a series of satellites. GPS communication can be seen in Figure 4-14.

The avionics system can be broken into four primary blocks for the purposes of design seen below in Figure 4-13. The power delivery, GPS receiver, signal processing, and RF transceiver blocks comprise the system that will satisfy the avionics requirements of this project. Each of these block definitions and design decisions will be detailed in further sections.

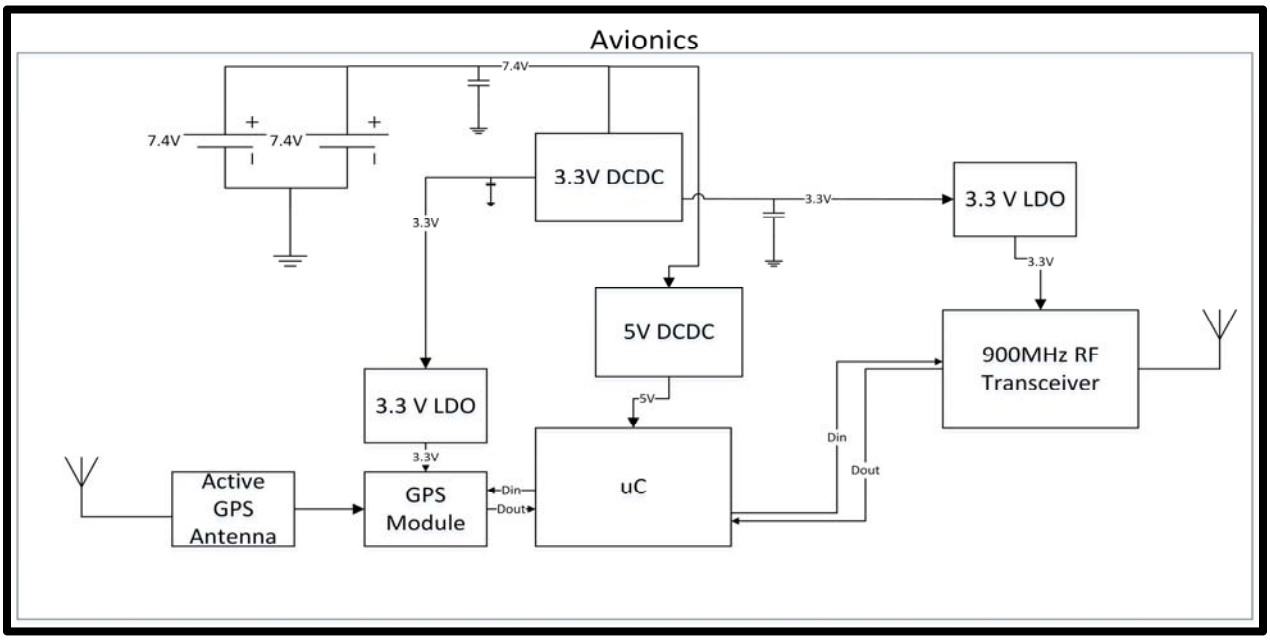

Figure 4-13: Avionics Block Diagram

4.3.1. GPS Block

4.3.1.1. GPS Module

The GPS block is perhaps the most important block as it allows the rocket to receive positioning coordinates, thereby allowing the team to track the position of the rocket in real-time as well as find the rocket once it has safely landed. This is mission critical as rocket retrieval is a top priority. Considerations and design decisions cover the two primary components that comprise this system, the receiver chip itself, and the antenna used in receiving the signal. Key performance indicators for the GPS unit include the Rx sensitivity, power consumption, time to first fix, and position update frequency.

Rx sensitivity ensures that a signal can be found even in densely populated areas where severe signal attenuation and noise may be present. The more sensitive the receiver is, the greater the likelihood of quickly locking on to a signal and determining the exact coordinates of the device. Power consumption during tracking and acquisition are important parameters as it will define the power requirements for the system and influence the choice of power delivery system. Time to first fix defines the amount of time under a variety of conditions including cold start, warm start, and hot start in which the GPS will acquire a signal with a good degree of accuracy. The lower the time to first fix, the longer the GPS unit can be kept in sleep mode prior to launch thereby saving power and ensuring all systems are functional for any length of time that the rocket may be on the launch pad, in the air, or on the ground. Additionally, if the signal is lost, the time to first fix defines the time necessary to reacquire a signal and continue to transmit data. Position update frequency is the final requirement that governs the selection for a GPS module.

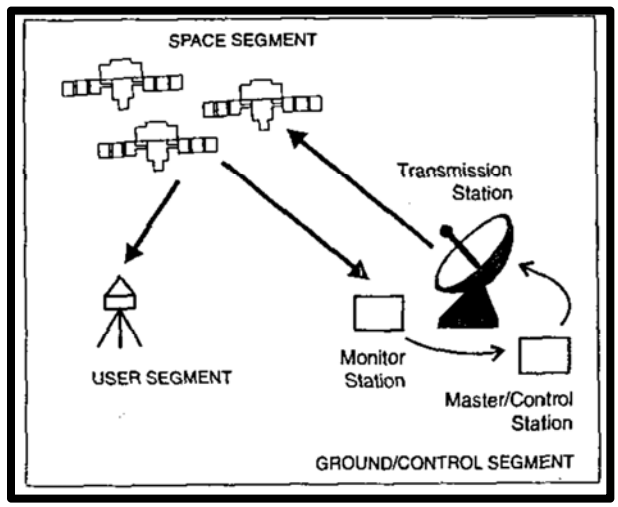

Figure 4-14: GPS Communication (IEEE GPS Technology)

During flight, the launch vehicle will be traveling very quickly; to accurately track its position, a high refresh rate on the position will be necessary. This will allow for greater resolution in the flight data that is sent to the ground but also creates a buffer in which the GPS has increased probability of successfully transmitting correct positioning coordinates for a fixed period. Calculations of positioning may be incorrect or packets may be dropped during wireless communication. Having greater packet density over a period, provided that the transceiver can handle the data throughput, results in a higher probability of at least one successful transmission for the fixed period. A variety of GPS modules were considered based on the described parameters with the ultimate decision quantitatively chosen in Table 4-18.

The SparkFun Venus GPS was chosen due to its high sensitivity receiver architecture capable of capturing signals down to -165 dBm, 1 second time to first fix hot start, 29-second time to first fix cold start, and the inclusion of an onboard SMA connector. The sensitivity of the GlobalTop and Trimble modules was good but sacrificed performance to produce a lower cost device. Time to first fix for the GlobalTop and Trimble models were also higher due to the lower cost components and fewer included GPS channels. The UBlox and SparkFun modules have very similar performance characteristics with 18Hz and 20Hz maximum update

rates respectively, and -165dBm Rx sensitivity. Ease of use is a factor that encompasses the form factor, amount of documentation and support available, and the difficulty of system integration. This was the deciding factor between the UBlox and SparkFun modules due to the nearly identical electrical performance characteristics. The SparkFun module is a thru hole mounted breakout board with an SMA connector pre-soldered onto the board. The UBlox module comes in either a surface mount or land grid array package. In addition to the increased difficulty of soldering into the system, an RF PCB trace would need to be designed to allow for connection of an external antenna. RF PCB traces require a high level of knowledge and skill to implement correctly and are outside of the scope of this teams' knowledge. The SparkFun module provides a similar feature set in an easier to use form factor which is why it will be used.

Table 4-18: GPS Module Decision Matrix

GPS Module									
Design		GlobalTop PA6H		Trimble Copernicus II		UBlox MAX-M8Q-0		SparkFun Venus GPS	
Requirement	Weight	Value	Score	Value	Score	Value	Score	Value	Score
Rx Sensitivity	8	7	56	5	40	9	72	9	72
Current Consumption	2	7	14	3	6	8	16	5	10
Cost	2	5	10	5	10	5	10	3	6
Time To First Fix	9	7	63	4	36	8	72	8	72
Communication Protocol	3	7	21	7	21	7	21	7	21
Number Of Channels	6	6	36	2	12	8	48	7	42
Ease of Use	9	3	27	3	27	3	27	8	72
Max Acceleration Force	6	8	48	4	24	8	48	8	48
TOTAL		275		176		314		343	

4.3.1.2. GPS Antenna

The second primary component within the GPS block is the antenna. Due to the distance over which GPS satellites must transmit timing and positioning data, the signal seen by the GPS receiver is very weak and can reach down into the -160 dBm range. While the Rx chain built into most GPS receivers can achieve a similar level of sensitivity, maximum performance can only be achieved through a high gain active antenna. For this reason, a high gain antenna capable of achieving 30 dB of gain on the RF signal prior to baseband down conversion will be used. This additional gain will ensure that a greater number of GPS signals are captured and used which will increase the time to first fix and steady state signal retention.

4.3.2. RF Transceiver Block

4.3.2.1. RF Transceiver Module

The RF transceiver chosen for this application on board the rocket is critical to the success of the flight and recovery of the rocket. The transceiver will be responsible for facilitating the communication between the rocket and the base station. As a result, the choice must support data throughput capable of handling 20 Hz GPS update signals as well as any other data that may be relayed back to the base station such as altitude and temperature.

Key performance indicators for the RF transceiver include the transmitter power, current consumption, maximum data rate throughput, range, and ease of implementation. The importance of the data throughput, transmitter power, and range are paramount to the success of the communication with the rocket for the duration of the flight. These parameters were given the highest weighting in the design matrix. The choice to use 900 MHz falls under the ease of use category as it is an unlicensed ISM band so no radio license is necessary to operate within this band. Additionally, communication channels using this frequency are mature and very reliable helping to satisfy the durability of the engineering component choice.

The alternative options to 900 MHz would be either 433 MHz or 2.4 GHz. While it provides greater range and the option for a higher power transceiver, the 433 MHz band requires a radio operator license and sacrifices data throughput due to the lower frequency and smaller frequency band available. These drawbacks make it potentially unsuitable for the anticipated data throughput. 2.4 GHz 802.11 communication protocols provide high data throughput on the scale of hundreds of megabytes per second. The 2.4 GHz band suffers from range limitations due to the high frequency, however, and has a maximum range of 105 feet. The range limitations eliminate the 2.4 GHz band from use in this application. 900 MHz provides sufficient range of up to 60 miles (line of sight) for a 1 watt transceiver with high gain antennas.

Given that the primary type of data transmitted is GPS coordinates, calculating the packet size and necessary throughput needed for reliable data transfer was included in the design decision and can be seen below in Equation 4-4. The 900 MHz band satisfies these requirements. The second primary deciding factor for the RF transceiver was the output power of the transmitter. This directly determines the possible range of the system and due to the importance of rocket recovery to the success of the mission, there must be no doubt or possibility of this system failing to operate due to extended range. The decision to choose a 1 Watt transceiver will allow for communication at distances multiple orders of magnitude larger than what the rocket will be experiencing in competition. The flexibility of this high-power transceiver manifests itself in the ability to also reduce the power and design low power operation should a lower power be sufficient for the purposes of this application.

$$1500bits * \frac{20\ packets}{s} = 30{,}000bits/s \qquad \text{Equation 4-4}$$

The Digi Xbee Pro SX satisfies all the requirements of this application and provides the best performance out of all of the options considered. With a transmitter output power of 1 watt, it is the highest of the options selected with the alternate Digi model using the same transmitter and the Murata and Adafruit options only reaching 22dBm and 20dBm respectively compared to the Digi's 30dBm. The maximum data rate of the Xbee Pro SX of 125kbps is more than sufficient for the GPS data that will take a maximum of 30kbps as calculated in Equation 4-4. Other models considered for this application have similar data throughput capabilities. The Xbee Pro SX has the longest range out of any of the models considered due to its high TX power at 30dBm and high RX sensitivity at -103dBm. The maximum range rating for the Xbee Pro SX is 40 miles line of sight, which will ensure that the rocket is always within range of the base station regardless of the flight path. The Xbee Pro SX provides superior

performance in transmission range while maintaining a high data rate throughput. Detailed documentation and protocol support make this option the best choice for this application. With support for both UART and SPI serial communication the Xbee transceiver gives the widest selection for communication interface. Protocol overview can be seen below in Figure 4-15.

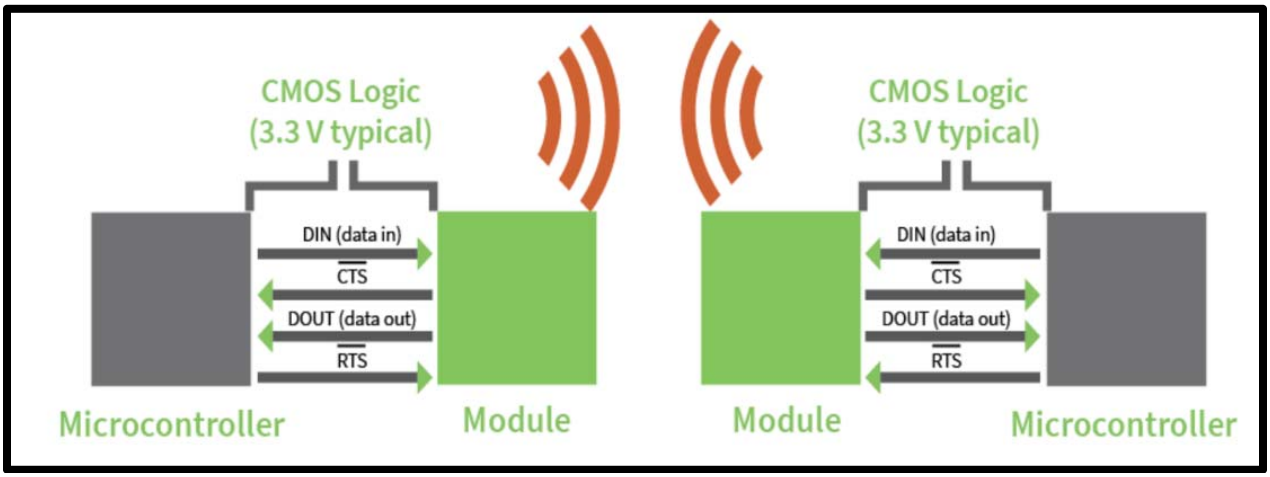

Figure 4-15: Xbee UART Comm. Datasheet

Design decisions are outlined in greater depth in the design matrix seen below in Table 4-19.

Table 4-19: RF Transceiver Decision Matrix

RF Transceivers									
Design		Xbee-PRO SX		Digi Xtend vB 900MHz		Murata DNT90MCA		ADAFRUIT RFM96W	
Requirement	Weight	Value	Score	Value	Score	Value	Score	Value	Score
Tx Power	9	9	81	9	81	3	27	2	18
Current Consumption	3	3	9	5	15	9	27	9	27
Data Rate	4	8	32	7	28	5	20	9	36
Cost	5	6	30	2	10	8	40	9	45
Max Range	8	8	64	9	72	1	8	2	16
Documentation	2	8	16	8	16	8	16	8	16
Communication Protocol Support	2	8	16	7	14	8	16	7	14
Total			248		236		154		172

4.3.2.2. RF Transceiver Antennas

4.3.2.2.1. RF Base Station Antenna

The design of the base station antenna was determined by the gain and antenna position relative to the rocket. The three-primary antenna designs that were considered covered a spectrum of radiation patterns suitable for almost any application. Since the base station will not move for the duration of the flight and the path of the rocket requires only a narrow incident angle relative to the base station, the Yagi antenna is best suited for this task. Dipole antennas provide a 360-degree radiation pattern, which is excellent if the direction of the receiver is unknown however since the approximate path of the rocket is known, a

full 360-degree radiation pattern is unnecessary and sacrifices antenna gain due to the omnidirectional radiation.

Dish antennas provide excellent directionalization and gain characteristics for two stationary transceivers. The radiation pattern for dish antennas is typically less than 10 degrees. however, which will not provide the desired spread to ensure that the base station receives the signal transmitted by the rocket. The Yagi antenna allows for a wider radiation spread to better accommodate the path of the rocket while still maintaining excellent directionalization and gain relative to a dipole antenna. The construction and radiation pattern for Yagi antennas can be seen in Figure 4-16. Yagi antennas can be dual polarized, thereby increasing the radiation angle while maintaining the same level of directionalization. By using a dual polarization configuration, the antenna now transmits signals on horizontal and vertical axes giving the signal a much wider radiation pattern increasing the ability for the antenna to transmit or receive signals. Design considerations and weights of each can be seen in Table 4-20.

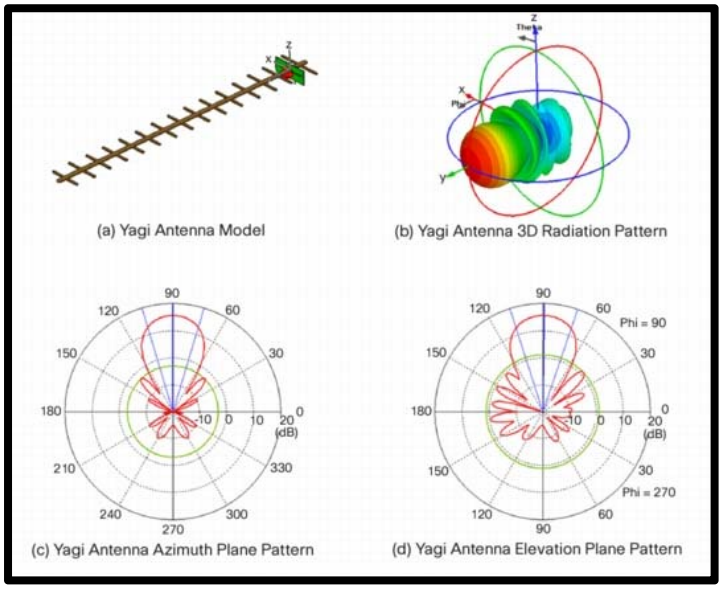

Figure 4-16: Cisco Antenna White Papers

Table 4-20: RF Base Station Antenna Decision Matrix

RF Base Station Antenna							
Design		Yagi		Dipole		Parabolic/Dish	
Requirement	Weight	Value	Score	Value	Score	Value	Score
Gain	8	9	72	8	64	10	80
Power Handling	4	5	20	5	20	5	20
Cost	2	4	8	8	16	2	4
Size	2	4	8	7	14	2	4
Bandwidth	3	5	15	5	15	5	15
Polarization	3	8	24	5	15	5	15
Directionalization	5	8	40	2	10	4	20
TOTAL			187		154		158

4.3.2.2.2. RF Rocket Antenna

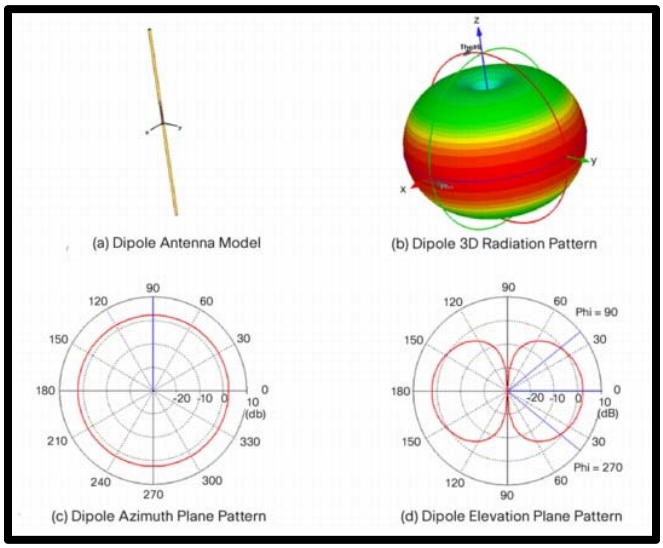

Figure 4-17: Cisco Antenna White Papers

The RF antenna on the launch vehicle has similar performance requirements to the antenna on the base station. Gain, position of the antenna, and size constraints are the primary governing factors for the on-board rocket antenna. During flight, the orientation of the rocket and antenna relative to the base station will be unknown. It is for this reason that a wide radiation pattern is necessary to broadcast towards the base station regardless of the orientation of the rocket. This removes both the Yagi and dish antenna as options for this application. The monopole whip antenna, most commonly seen on wireless access points and routers offers 360-degree radiation and reasonable gain. For applications where size constraints are an issue, a wire cut based on the wavelength of the signal. can be used however it does suffer from low gain due to the inaccuracy of the impedance matching into the antenna. Alternatively, the most space conscious solution, the PCB antenna can provide high gain, 360-degree radiation as seen in Figure 4-17, and a very small form factor. The knowledge and time to design such an antenna is beyond the scope and capacity of this team. Due to these limitations, the monopole whip antenna is presented as the best solution for this application providing high gain in a low cost small package with a radiation pattern suitable for use on board a rocket. Design considerations and weights of each can be seen in the design matrix Table 4-21.

Table 4-21: RF Rocket Antenna Decision Matrix

RF Rocket Antenna							
Design		Whip		PCB		Wire	
Requirement	Weight	Value	Score	Value	Score	Value	Score
Gain	8	9	72	9	72	3	24
Power Handling	4	7	28	4	16	6	24
Cost	2	5	10	6	12	7	14
Size	4	4	16	8	32	8	32
Bandwidth	3	8	24	8	24	8	24
Ease of Implementation	5	8	40	2	10	8	40
Directionalization	4	8	32	6	24	6	24
TOTAL			222		190		182

4.3.3. Power Supply

4.3.3.1. Batteries

The design decision for the power supply system was based on the voltage that can be supplied reliably, the durability of the battery cells, max current output, energy density, and size constraints of the avionics bay. While 9V alkaline batteries offer the best reliability and durability, they suffer from low energy density and current output which increases the weight and size of the power supply significantly. Alternatively, lithium polymer (LiPo) 18650 cells offer the highest energy density but sacrifice safety as they are very volatile and may explode if punctured. Lithium cells packed into prismatic packs offer slightly lower energy density than LiPo 18650 cells however offer much higher safety as they are less likely to explode in the event of a failure. Prismatic packs provide similar weight and size flexibility found in LiPos as well as rechargeability and high current output. The combination of these factors makes prismatic lithium cells the best option balancing safety and performance of the system to ensure that it is the least likely solution to fail.

The need for high capacity batteries is due to the potential for the rocket to remain on the launch pad with all systems on for an extended period. This disqualifies Alkaline 9V batteries as an option due to the low energy density and high weight relative to the lithium polymer and lithium ion alternatives. Additionally, 9V batteries may not be able to supply the desired maximum current that the system needs to operate. Alkaline batteries are only capable of outputting close to 1 A for a period of half an hour which is insufficient for this application. Calculations for battery capacity can be seen below in Table 4-22. 18650 LiPo cells are standardized for use in many mobile electronics due to their ability to be recharged thousands of times and high energy density 18650 LiPo cells are notoriously volatile and can ignite if punctured. This creates a severe safety concern due to the extreme forces that components within the rocket are anticipated to encounter and eliminates the 18650 LiPo cell as a potential option. Lithium prismatic cells offer similar energy density to 18650 LiPo cells and provide similar current output. However, when punctured, lithium prismatic cells are not prone to ignition and normally inflate to contain the expanding gas. This feature makes lithium prismatic cells a much safer option over the LiPo alternative. Full weights and scores of each key component can be found in the design matrix in Table 4-22.

Table 4-22: Power Supply Battery Capacity

Component	Max Current Consumption [mA]	Supply Voltage [V]	Power Consumption [mW]	Hours Active	mWH Capacity	Battery Voltage	Battery Capacity [mAH]
Xbee Pro SX	900	3.3	2,970				
Vdd to 3.3 LDO	10	7.4	74				
Vdd to 5 LDO	3.2	7.4	23.68				
GPS Module	60	3.3	198				
Active GPS antenna	10.3	5	51.5				
Teensy 3.6	200	5	1000				
			4317	8	34,540	7.4	**4667**

Table 4-23: Power Supply Decision Matrix

Power Supplies							
Design		Alkaline 9V		18650 LiPo		Lithium Prismatic	
Requirement	Weight	Value	Score	Value	Score	Value	Score
Voltage	8	7	56	5	40	9	72
Cost	2	4	8	7	14	7	14
Size	2	8	16	3	6	5	10
Rechargeability	9	2	18	8	72	8	72
Durability	3	9	27	4	12	7	21
Energy Density	6	2	12	5	30	8	48
Number of Recharge Cycles	6	0	0	4	24	8	48
TOTAL		137		198		285	

4.3.3.2. Voltage Regulation

The 7.4V batteries chosen to supply the avionics system with power will need to be regulated down to the voltages required for each of the components within the subsystem. The transceiver and GPS receiver require 3.3V supplies with very low noise. The battery supply voltage will be regulated down to 3.3V and then conditioned using Low Dropout Regulators (LDO) to ensure that the supply has consistently low noise. Any noise on the input supply to any of these components could lead to a severe reduction in RF performance. Using high performance regulators prevents this issue from happening. The microcontroller signal processor will require a 5V DC supply. Noise is not as large of a concern; however, lower noise on the supply is always a desirable feature. As a result, an LDO will also be used for this application.

4.3.4. Additional Avionics Considerations

4.3.4.1. RF Transparency

RF transparency of the rocket body is an issue given that the rocket body is carbon fiber. The avionics subsystem will be implemented in both the nosecone and the body of the rocket above the motor. The dual avionics systems will be necessary in order track both independent sections of the rocket once they separate on the descent. The nosecone will be constructed from fiberglass, so RF signals will penetrate the surface. The avionics above the motor will have either an RF transparent window built into the body of the rocket where the antennas are located or there will be an antenna external to the rocket fixed to run the length of the propulsion section of the rocket to mitigate the issue of RF transparency.

4.4. Mission Performance Predictions

4.4.1. Flight Profile Simulation

Our launch vehicle was simulated using an OpenRocket simulation. This program simulated altitudes and stability with motor thrust curves. Figure 4-18 shows the OpenRocket model of the rocket. This model is simplified as the weights for the recovery bays and the bulkheads are estimates based off of material selection.

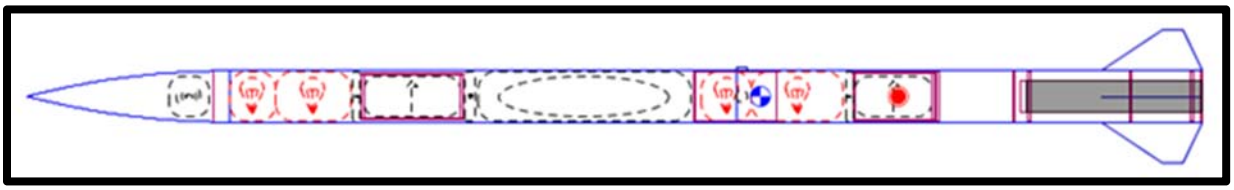

Figure 4-18: OpenRocket model of the launch vehicle

The rocket was simulated at wind speeds of 0, 5, 10, 15, and 20 mph. This ensured that the altitude predictions would cover the range of launch conditions that might be experienced. Figure 4-19 is the simulated flight profile from the 10 mph flight.

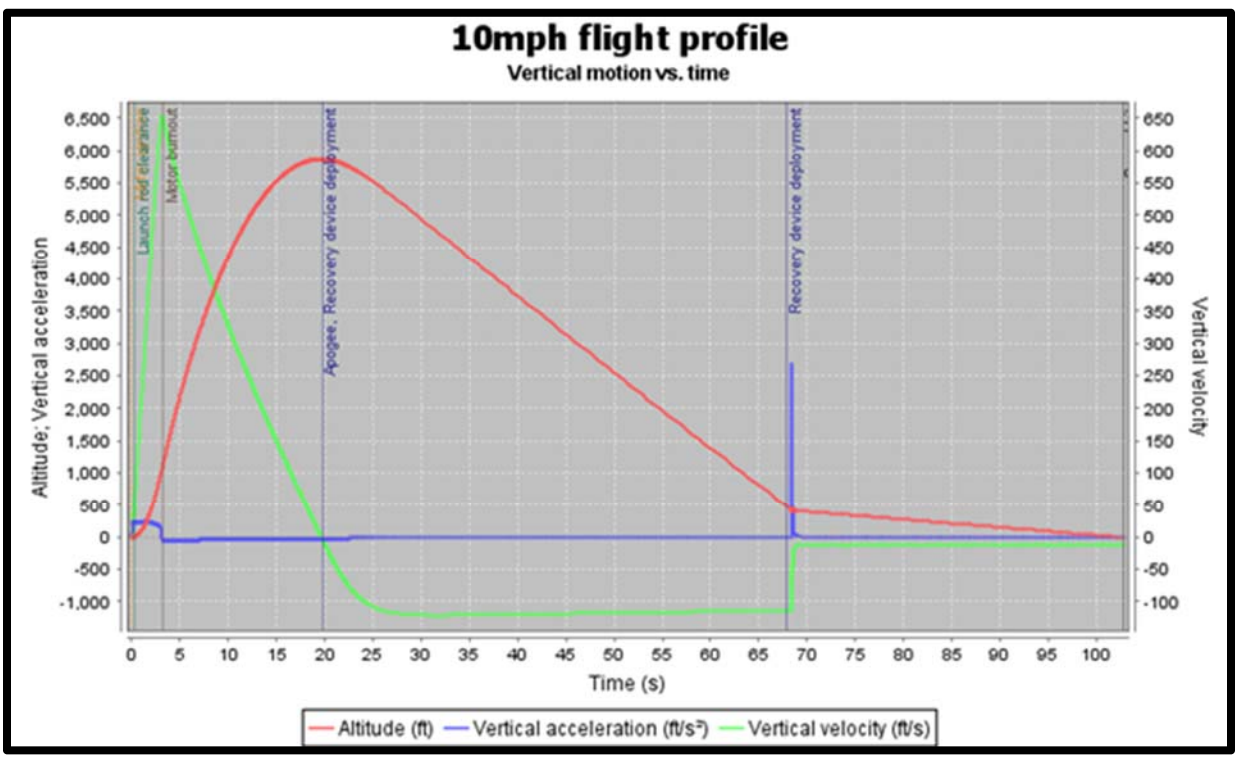

Figure 4-19: 10 mph flight profile simulation

The flight profile simulation shows that the projected apogee is 5880 feet AGL. For wind speeds from 0 to 20 mph the apogee ranges from 5773 to 5880 feet AGL. This altitude is acceptable for us because we expect our weight to increase as fasteners are added. The altitude will ultimately be controlled by changing the fin size to decrease or increase the altitude as needed. The

simulation shows that the launch vehicle will have a velocity of 60 feet per second. This simulation used an eight-foot rail which gives the team the opportunity to move up to the 12-foot rail if needed.

4.4.2. Stability

The stability of the rocket was simulated using OpenRocket. We used the estimated weight of all the sections as well as the current fin sizes to find the center of gravity and the center of pressure. Figure 4-20 shows the locations of the center of mass and center of pressure as well as the calculated stability.

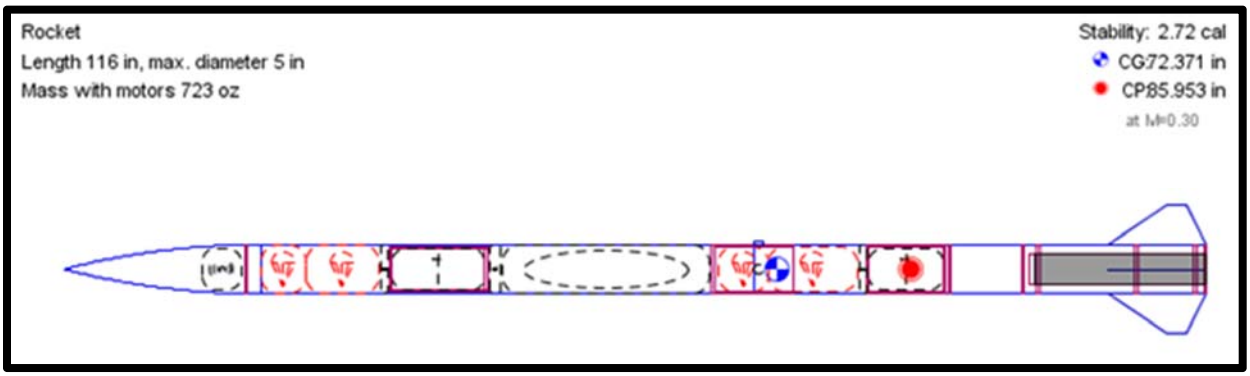

Figure 4-20: Simulated Launch Vehicle Stability

The simulated stability of our rocket is 2.72 calipers with the center of gravity located 72.4 inches from the tip and the center of pressure located 86.0 inches from the tip. This stability meets the requirement of at least 2. The center of gravity was verified using a CAD model of the rocket with the correct materials for the body, and using estimated weights for the parachutes, batteries, and the motor.

4.4.3. Drift

After the parachutes were sized and the final weight of the assemblies known, a MATLAB script was used to calculate the descent trajectory using the barometric formula to account for changing air density. Accelerations and decelerations are accounted for assuming deployment occurs instantaneously. Figure 4-21 shows the altitude and vertical velocity for the descent phase using our model.

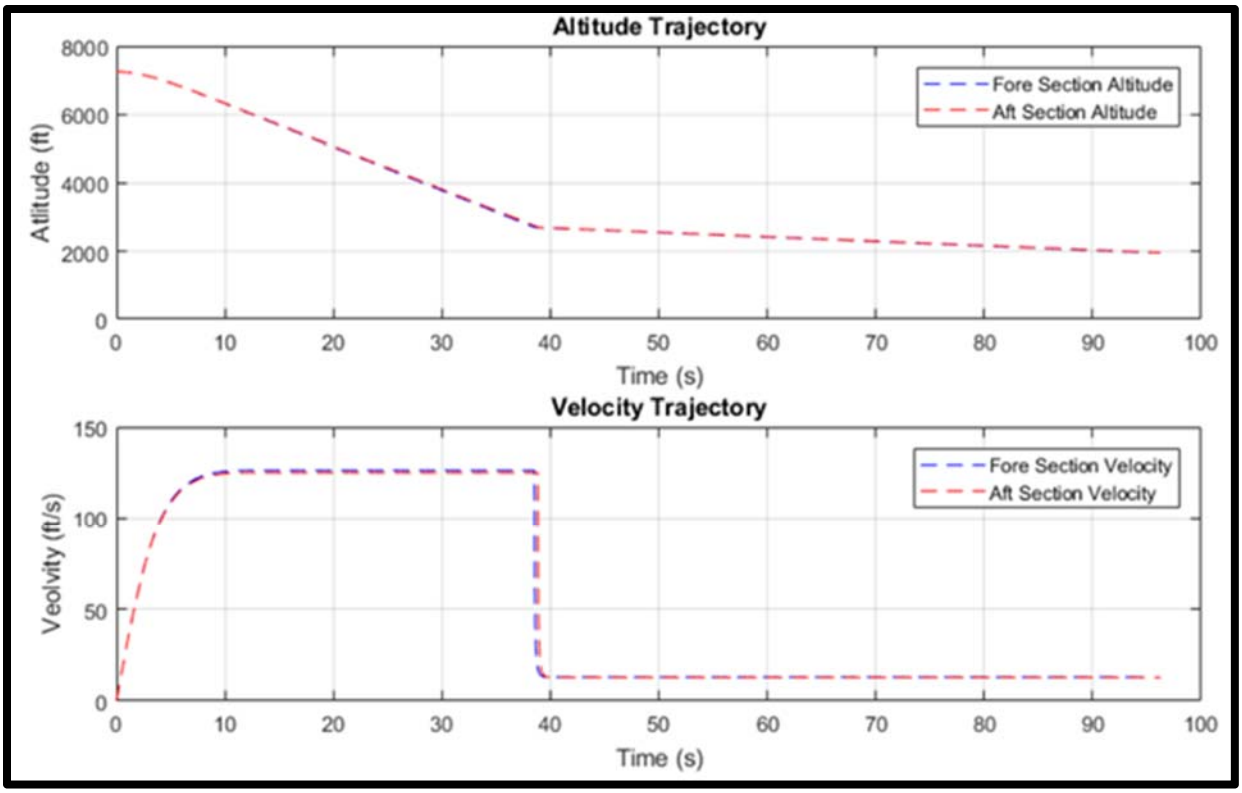

Figure 4-21: Vertical Trajectories of the descent phase

Drift distance was estimated assuming that cross wind speeds are an average over the entire descent, and that cross winds do not affect the vertical trajectory. Weather-cocking was not included in the model, so apogee is assumed to happen directly over the launch pad Table 4-24 also shows the backup calculation method which used OpenRocket to calculate the drift distance. The problem with this simulation is that it did not allow us to separate the rocket into two sections at apogee so the OpenRocket simulation only models the fore section.

Table 4-24: Projected wind drift distances

Wind Speed	**0 ft/s**	**5 mph**	**10 mph**	**15 mph**	**20 mph**	**Descent Time**
Fore Section Drift (ft)	0 ft	476 ft	953 ft	1,489 ft	1,906 ft	95.3 s
Aft Section Drift (ft)	0 ft	481 ft	962 ft	1,444 ft	1,925 ft	111.7 s
OpenRocket Drift (ft)	11 ft	200 ft	500 ft	800 ft	1,400 ft	N/A

The projected drift for both sections under maximum cross-wind conditions remains within the SL required radius of 2500 ft. With 20 ft/s winds, the rocket will drift to ~ 77% of the radius requirement. It is expected that the weight of the rocket will increase before CDR, which will decrease the drift radius. In OpenRocket the drift was simulated at 0, 5, 10, 15, and 20 mph. These simulations included wind cocking. In addition, each simulation was run with the launch rail

pointed at 0° from vertical. Figure 4-22 below shows the drift analysis for the 20-mph wind drift analysis.

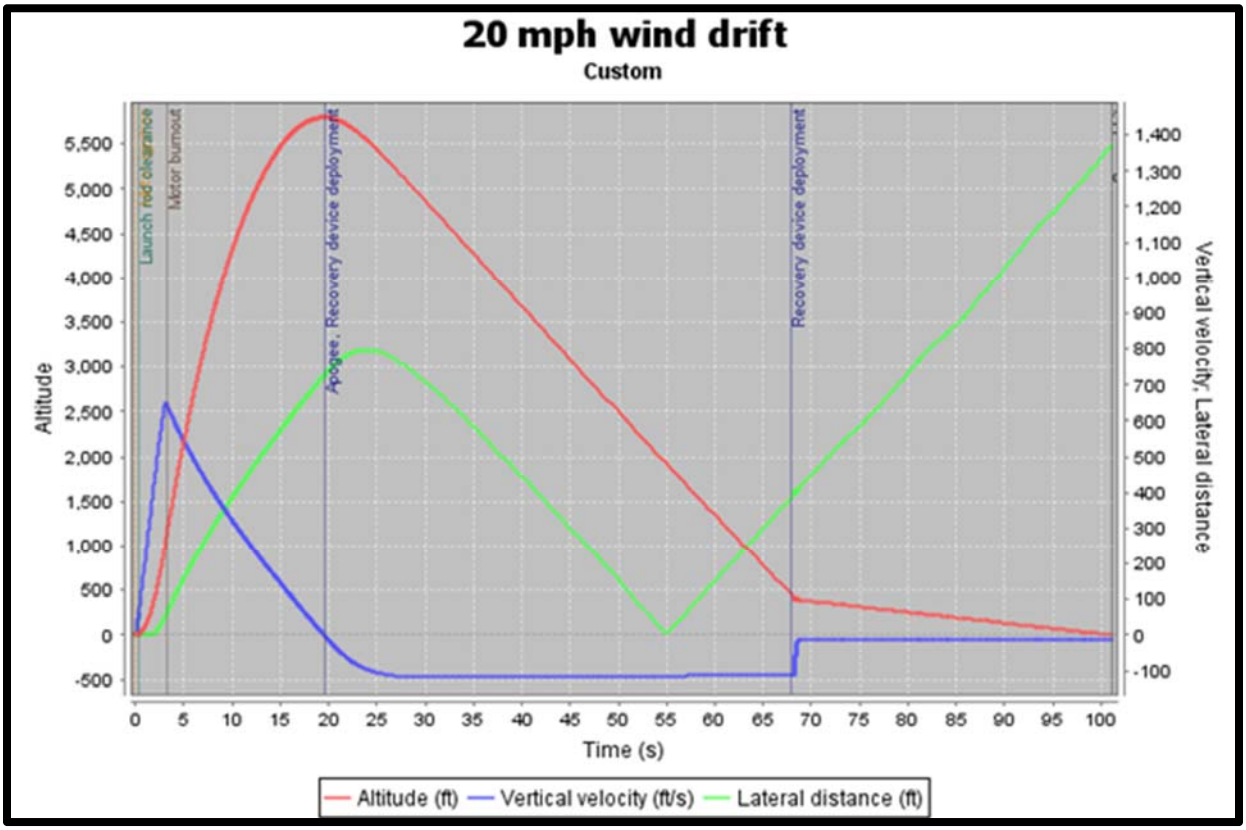

Figure 4-22: OpenRocket 20 mph wind drift analysis

The plot shows that the launch vehicle is expected to drift about 1400 ft. from the launch point. This analysis includes about 800 feet of wind cocking that helps the launch vehicle to stay within the required recovery radius. In the actual launch, it is expected that we will have wind cocking, but the direction may not be constant throughout the flight and may not be as much of a benefit.

4.4.4. Kinetic Energy

The same model used to calculate the descent trajectory was used to determine the final kinetic energy of each section. The final projected weight, landing velocity, and landing kinetic energy for each section are summarized in Table 4-25.

Table 4-25

Section	Weight	Landing Velocity	Landing Kinetic Energy
Fore	20.3 lbs.	12.97 ft/s	54.97 ft-lbf
Aft	19.9 lbs.	12.84 ft/s	51.05 ft-lbf

5. Safety

5.1. Component Risks and Delay Impact

5.1.1. Safety Responsibilities

The Safety Officer for the team is Timothy Lewis. He shall be responsible for the overall safety of the project during all stages. In addition to the Safety Officer, there is a member of each of the primary sub teams responsible for direct safety of the operations of that sub team. These individuals shall function as a group to prepare and enforce the needed safety requirements for all activities that the team undertakes. Beyond these responsibilities the Safety Officer shall be responsible for the maintenance of MSDS sheets and all safety assessments. All procedures and checklists shall fall under the preview of the Safety Officers and assigned deputies, making sure that they meet all safety requirements as set down by NASA, NAR, and NFPA.

In addition to safety sheets the Safety Officer will be responsible for checklists and final sign off sheets for all mission activities. These documents will be prepared by the team responsible for the activity with assistance of the Safety Officer. They will then receive a final check off by the Safety Officer, who will maintain a copy. These documents will then be followed during the activity to allow all members to perform the activity safety and correctly. All checklists will contain caution statements for any hazards that arise during a given step. Lastly, all activity members will receive a safety briefing about said hazards before the beginning of the activity. For preliminary checklists see Appendix B.

5.1.2. Risk Analysis

The risk assessments for the various hazards and failures listed below are based on a two-character designation. This designation has a number relating to the chance of the event, and a letter relating to the severity of the event. These identifiers are shown in Table 5-1.

Table 5-1: Risk Assessment Severity

	Severity					
Chance		A - Negligible	B - Minor	C - Moderate	D - Significant	E - Severe
	1 - Very Likely	1A	1B	1C	1D	1E
	2 - Unlikely	2A	2B	2C	2D	2E
	3 - Possible	3A	3B	3C	3D	3E
	4 - Likely	4A	4B	4C	4D	4E
	5 - Very Likely	5A	5B	5C	5D	5E

5.2. Personnel Hazard Analysis

Table 5-2: Personnel Hazard Analysis Chart

Hazard	Cause	Effect	Risk	Mitigation
Improper Use of Power Hand Tools	Insufficient Experience, Lack of Focus, Insufficient PPE	Personal Injury, Damage to Components	3C	All work with handheld power tools shall be done in group workspaces with supervision to catch mistakes and address concerns.
Improper Use of Machine Tools	Insufficient Experience, Lack of Focus, Improper Setup of Tool, Insufficient PPE	Personal Injury, Damage to Components, Wear or Damage to Tool	3D	All users of the machine tools are required to pass the Machine Shop Safety Course before use and abide by all safety regulations. In addition, all machine tool work shall be done with supervision.
Improper Use of Soldering Iron	Lack of Focus on Iron or Components being Soldered	Burns to Skin or Clothing	3D	When the soldering iron is in use, the iron shall be the sole focus of the user and shall be put away after the iron has cooled.
Electric Shock	Insufficient Preparedness of Workspace or Electrical Component	Tingling, Minor Discomfort	3B	Careful handling of all electric components and selection of said components for minimal safety risk.
Composite Particulates	Improper Sanding or Handling, Improper PPE	Irritation of the Eyes and Upper Respiratory System	4C	All work with composites shall take place in a well-ventilated area with the appropriate PPE (dust mask and safety glasses).
Epoxy Skin Contact	Improper PPE	Irritation of the Skin	3B	All people using epoxy shall wear the appropriate PPE (gloves, safety glasses) and be careful when handling.
Chemical Inhalants	Improper Workspace, Improper Handling	Irritation of Upper Respiratory System	2B	All work with vaporous chemicals shall be performed in ventilated rooms and if any ill effects are noticed the room shall be evacuated to allow for dispersion. Additionally all containers shall be inspected to avoid leaks.
Cuts from Sharp Materials	Touching Sharp Edges while Working on the Rover or from Glass Shattering	Cause Minor Cuts or Splinters	3B	Rover will be handled with gloves. Sharp edges will be deburred.

5.3. Failure Modes and Effects Analysis (FMEA)

Table 5-3: Structures FMEA

Structures				
Failure	**Cause**	**Effect**	**Risk**	**Mitigation**
Body Tube Buckling	Extreme Axial Loading	Loss of Vehicle, Loss of Internal Components	1E	Testing of carbon fiber and body tube mock-ups under loads larger than simulated flight forces.
Cracks in Body Tube	Holes Drilled in Body Tube or Defects in Material	Total Failure of Body Tube	2E	Careful inspection of material for defects and specific supplier choice. All additions to tube shall be planned to limit drilling and modifications.
Nose Cone Collapse	Improper Fiberglass Layup, Unplanned for Forces on Nose Cone	Loss of Avionics, Inability to Relaunch Rocket	2E	Careful planning and execution of nose cone build and ground testing of nose cone.
Bulkhead Failure	Force Applied to Bulkhead Hardpoints	Damage to Airframe, Loss of Structural Integrity, Loss of Attached components	2D	Bulkheads designed with a large safety factor to avoid failure during launch.
Bulkhead Slippage	Improper Application of Epoxy to Bulkhead	Loss of Structural Integrity, Loss of Attached Components	2D	Bulkheads inspected and tested after being placed in airframe to catch mistakes.
Coupler Failure	Bending of the Rocket	Loss of Structural Integrity	2D	Coupler design to be tested under bending loads greater than expected values before use.
Motor Tube Off-center	Improper Alignment of Centering Rings or Motor Casing	Damage to Airframe, Rocket Trajectory Unknown or Unstable	2C	Careful alignment of the motor casing during build and careful inspection before launch.
Fin Failure	Fins Improperly Attached to Airframe or Fin Flutter	Damage to Airframe, Loss of Fins	2D	Fin attachment checked and tested before launch. Multi material fins to reduce issue of fin flutter.

Table 5-4: Propulsion FMEA

Propulsion				
Failure	**Cause**	**Effect**	**Risk**	**Mitigation**
Catastrophic Motor Failure	Manufacturing Defect or Motor Damage	Major Damage to all Components, Possible Injury	1E	Select motors from certified manufacturers and distributors. Mentor shall do all handling of motors.
Motor Fails to Ignite	Manufacturing Defect or Igniter Failure	Motor does not Start and Rocket Remains on Pad	1D	Follow NAR safety code in event of ignition failure. Have backup motors on hand to replace failed motor if applicable.

Table 5-5: Recovery FMEA

Recovery				
Failure	**Cause**	**Effect**	**Risk**	**Mitigation**
Recovery Attachment Point Failure	Quick Links Come Undone or Hardware Fails	Complete Loss of Recovery System	3D	Visual inspection of all links and knots before launch. Select hardware for system that has a high safety factor.
Uncontrolled Inflation of Parachute	Improper Packing of Parachute or Parachute Too Large	Increased Peak Load on Rocket, Damage to Internal Components	2C	Test packing and deployment methods for parachute.
Flame Damage to Components	Adequate Thermal Protection	Damage to Recovery System	3B	All components in recovery system shall be flame retardant.
Self-Impact of Sections	Improper Bridle Sizing or Parachute Placement	Damage to Airframe and Components	2C	Final rigging will be inspected by HPR mentor and bridles sized to prevent collision.
Ejection Charges Fail to Ignite	Loss of Power or Wiring Disconnects	Failure of Recovery System to Deploy	3D	Check batteries before launch and build a backup system. Strengthen wire connections to attachment points.
Premature Ejection	Unexpected Excitation of E-matches or Inaccurate Altitude Sensing	Damage to Airframe and Components	2C	Shielding of all wires. Reliable altimeters for ejection charges with static ports for increased accuracy.
Failure to Separate	Inadequate Black Powder or Poor Charge Placement	Failure of Recovery System to Deploy	3D	Ground testing prior to launch to verify ability to separate.
Premature Separation	Shear Pin Failure	Damage to Airframe and Components, Reduced Altitude	2C	Adequate shear pins will be used to secure the sections.

Table 5-6: Payload FMEA

Payload				
Failure	**Cause**	**Effect**	**Risk**	**Mitigation**
Ductile Metals of Rover Become Projectiles	Payload Being Ejected from Rocket with Black Powder	Parts Break on Rover/Bystanders get Hit by Shrapnel	2D	Components will be kept in compression at all times to keep them from coming off of the rover. Testing will be conducted for the proper amount of black powder.
Sonar Modules Interfere with Rocket Telemetry	Sonar Modules being Powered on During Flight	Rocket Information Not Reaching Base Station	1B	Rover will be completely turned off while on launch pad and during flight.
Early Ejection During Flight	Housing Fracture or Early Release of ARRD	Change in Aerodynamics, Unpredictable Flight Path, Payload Becoming a Projectile	3E	An advanced retention and release device is being utilized which can withstand 2,000 lb. Components such as carbon fiber are utilized to mitigate any compromise of the rover housing.
Motors Catching on Fire	Large Continuous Current Draw while Motors Stall	Frying Electrical Components or Burns from Flame	2C	Current sensors will be used to start and stop motors when motors are being stalled to prevent large continuous current draws.
Batteries Catching on Fire	Batteries being Overcharged or Over-Discharged	Burns from Open Flames	2E	Every time the batteries are charged they will be charged with a smart charger. Rover power supply will have safety circuits to monitor battery level and prevent batteries from being over-discharged

Table 5-7: Environmental Impact FMEA

Environmental Impact				
Impact	**Cause**	**Effect**	**Risk**	**Mitigation**
Hazardous Chemical Release	Motor Failure or Battery Failure	Spreading of Chemicals that Could Damage Soil and/or Plant and Animal Life	2E	Motors shall be selected that do not release any excess material. All motors and batteries shall be inspected before launch or other use for defects.
Uncontrolled Descent of Rocket	Improper Deployment of Recovery System	Impact Damage to Surrounding Area	2C	Recovery system shall be tested prior to launch
Fragments of Airframe	Fragmentation of Airframe in Flight or at Landing	Sections of Airframe Left in Launch Area	2B	All components tested under loading conditions and designed to prevent failure.
Rocket Drift	High Winds in Launch Environment	Rocket Drifts Out of Target Area	3C	Perform drift analysis calculations and make design choices from that analysis.
Rover Becoming Stuck	Rough or Muddy Terrain	Inability of Rover to Continue Driving	4C	Design rover so that it can drive through rough and/or sticky terrain. Perform drive tests in rough terrain.
Hazardous System Reference	Destroyed or Damaged Testbeds	Leftover Debris or Other Chemicals Contaminated Environment	2C	All test systems shall be disposed up with proper methods and all test areas should be thoroughly cleaned following tests.

5.4 Project Risk Analysis

Table 5-8: Project Risk Analysis Chart

Risk	Likelihood	Impact	Mitigation
Components Destroyed in Testing	High	High	All destructive tests shall be carried out on scale models or specific materials. Additional components shall be manufactured where applicable. These additional components will increase cost and increase the likelihood of cost overrun.
Cost Overrun	Med	Med	The components shall be carefully selected before ordering to avoid getting components that will not be used in the final rocket.
Component Complexity	Med	Med	All designs shall be created with a goal toward accomplishing the mission first with any additional systems coming afterward. The additional functions will be added only after meeting all base requirements.

Missing Components	Med	Med	Components shall be ordered well ahead of time to ensure that they all arrive within the desired time. This shall also reduce costs because rush orders are generally more expensive.
Missed Deadlines	Low	High	All deadline documents shall be scheduled internally before the assigned due date to ensure that they are completed by their due dates.

6. Payload Criteria

6.1. Payload Objective

The payload shall be an autonomous rover. The rover is to complete a specific mission: to travel 5 feet on the ground followed by deployment of solar panels. The mission is considered a success once the solar panels are successfully deployed and the rover is the specified distance from the launch vehicle. To complete this mission, the payload must be carried by a launch vehicle and safely returned to ground.

The rover will be carried in the payload bay of the launch vehicle throughout the flight as described in Section 4.2. After the rocket is determined to have landed safely, a trigger signal will be transmitted to the section of the launch vehicle containing the payload to eject the rover. The rover will exit the open end of the payload bay, still contained in a carbon fiber housing. Once the housing is clear of the airframe, it will spring open, releasing the rover. The rover will drive at least five feet away from all parts of the airframe, navigating away from the launch vehicle and around any obstacles by using data from on-board sensors. Once the rover has reached a sufficiently clear location, the solar array will open, completing the mission.

6.2. Sub-System Review

6.2.1. Chassis

6.2.1.1. Chassis Requirements

The chassis of the rover is an essential component. It needs to be able to withstand and distribute the high forces of flight and ejection while protecting and providing mounting points for the sensitive internal components. There are several engineering requirements used for final chassis design decisions:

- Volume: The most important requirement is that the structure of the chassis is contained within the 4.5-inch cylinder, defined by the wheel diameter, to fit inside airframe. It should also not extend too long, to minimize the length of the section of the launch vehicle dedicated to the payload. The internal volume taken up by the chassis structure should also be minimized to ensure that there is sufficient space for the internal components.
- Robustness: Extremely high loads will be experienced during launch, when the recovery system deploys, and when the rover is ejected from the airframe. These forces will need to be dissipated away from the motors and the sensitive electronics with no damage to the chassis.
- Mass: The total payload mass should be minimized to lessen the overall rocket mass, and to make the rocket easier to stabilize. However, the payload mass is a small fraction of the overall rocket mass and the chassis is only a small fraction of the payload, so this is a low-priority requirement.
- Ground Clearance: Though the rover is designed with a low center of gravity for stability, to be able to navigate in difficult terrain the clearance between the ground and the chassis should be maximized when the rover is deployed.
- Manufacturability: The chassis design should leverage existing expertise and be able to be manufactured with equipment available to the team.

6.2.1.2. Chassis Design Alternatives

Several designs were considered for the chassis. The primary distinguishing consideration was the material used, since the general shape of the chassis is driven by the volume requirements. Four methods of construction and materials were considered. Two of the designs were further developed in CAD before a final design was chosen.

Other Oregon State rocketry competition teams have made their payloads and aircraft fuselages out of foam wrapped in composite. A design using this material to make a box shape for the fuselage, enveloping the central components, was considered primarily since the expertise already exists within the program. However, there is a very tight space constraint, as mentioned above, and the additional thickness of the foam would make it more difficult to fit everything inside.

Another potential design involved manufacturing the entire chassis out of sheet aluminum, bent for rigidity and strength. The thin-walled nature of the design would leave plenty of room for the components. However, unlike the foam-composite structure, OSU has little equipment for sheet metal manufacturing. Additionally, the loads experienced by the rover may be higher than the sheet metal could be constructed to withstand in such a small space.

One leading design involved a solid aluminum frame, surrounded by sheet metal. This design is depicted in Figure 6-1. The advantages of this design were the greater strength due to the aluminum members running the length of the chassis and the thicker aluminum end walls. Electrical components could be easily mounted with screws through the sheet metal exterior or tapped into the thicker aluminum features, and could be attached on the top or inside.

Figure 6-1: Aluminum Framed Chassis

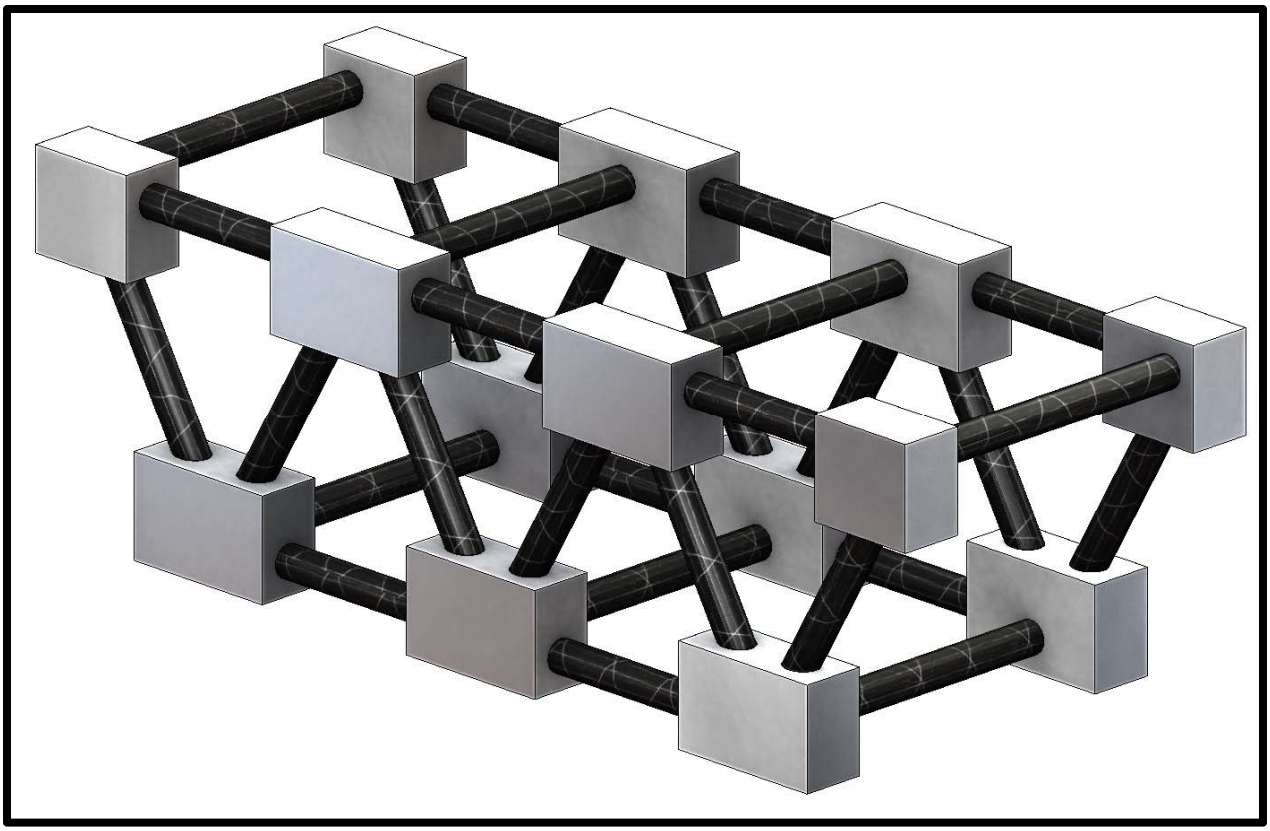

Figure 6-2: Carbon Fiber Truss Structure

The last design considered was a truss design, shown in Figure 6-2. This design was developed to be extremely strong in compression after it became clear how high the loads placed upon the rover would be. It is constructed of carbon fiber rods connected with aluminum fittings to form a truss. This design allows the drivetrain to be connected in a more flexible fashion to absorb impacts to the wheels. The internal components can attach by drilling and tapping directly into the aluminum fittings or by clamping to the truss members. The rigid structure is relatively bulky and continuous space for the larger components is in short supply at only 0.72 in.

6.2.1.3. Chassis Design Decision

To determine which chassis design to move forward with, a decision matrix was created. Each of the requirements was weighted based on performance and then each design alternative was evaluated based on the weighted requirements. The decision matrix is shown in Table 6-1.

Table 6-1: Chassis Decision Matrix

Chassis Options									
Design		**Al Frame**		**Al Sheet**		**Foam Composite**		**CF Truss**	
Criteria	**Weight**	**Rating**	**Score**	**Rating**	**Score**	**Rating**	**Score**	**Rating**	**Score**
Rover mass	1	4	4	6	6	7	7	3	3
Volume	6	7	42	6	36	2	12	6	36
Ground clearance	4	6	24	6	24	2	8	5	20
Robustness	10	7	70	4	40	8	80	10	100
Manufacturability	5	7	35	3	15	5	25	8	40
TOTAL			**175**		**121**		**132**		**199**

The much greater strength of the carbon fiber truss design, as well as its ability to fulfill the other requirements, led the team to select it for the preliminary design. This design will be manufactured for the first iteration of the rover.

6.2.2. Stabilizer

6.2.2.1. Stabilizer Requirements

The stabilizer is the part of the rover that will extend beyond the cylinder of the wheels when deployed. Since the rover has two coaxial wheels, the stabilizer is necessary to provide a reaction force on the ground so that the chassis does not simply spin in place. The stabilizer is folded up within the 4.5-inch envelope prior to deployment but will be spring-loaded to flip out into the deployed position. This simple yet essential rover system includes a few specific requirements:

- Mass: As with every component on the rocket, mass should be minimized.
- Robustness: The stabilizer must be able to deploy consistently, since without it the rover cannot drive. It must also be strong enough to not break under the mission loads.
- Climb Angle: The stabilizer should extend sufficiently far behind the chassis that the rover can climb small hills without flipping over.

6.2.2.2. Stabilizer Design Alternatives

The primary design decision when designing the stabilizer was the number and direction of the spring-loaded joints. The first option was a simple one-hinge design, with the stabilizer arm stored perpendicularly to the axle. If further length is needed, other approaches were considered. The next was a two-fold design, oriented the same way as the first option. However, a two-fold design drastically increases the chance of failure, since each hinge is a weak point. These first two designs are shown in Figure 6-3.

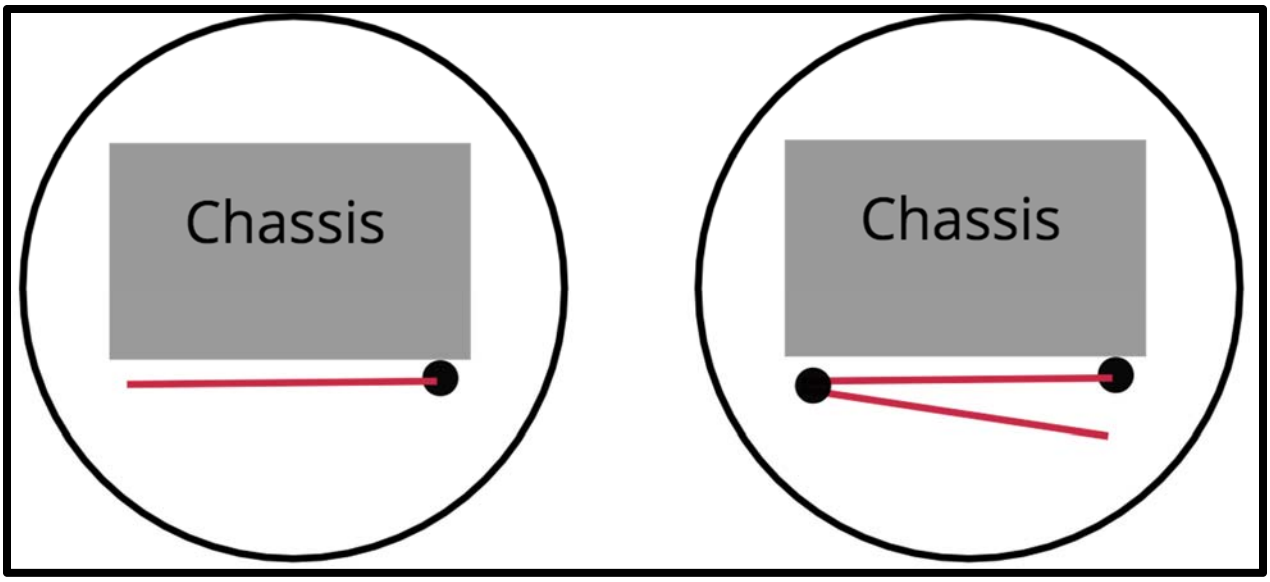

Figure 6-3: Side View of Rover with Orthogonal 1 and 2-Hinge Designs

The other design was to store a single arm parallel to the axle, with an axis of rotation orthogonal to the other two designs. This design is shown in Figure 6-3. The advantage is that since the rover is longer in this direction, a longer stabilizer can fit. However, since it is not rotating in the same direction as the rover, it could potentially become stuck against the ground and simply rotating the chassis would not be sufficient to release it.

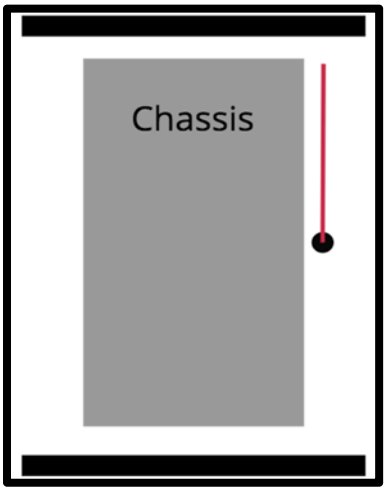

Figure 6-4: Top View of Rover with Parallel 1-Hinge Stabilizer

6.2.2.3. Stabilizer Design Decision

The decision matrix to determine the best stabilizer design is shown in Table 6-2. Robustness in deployment heavily outweighed the small increases in length that the more complex designs enabled. Therefore, the team selected the single hinge design for the stabilizer to be used in the preliminary rover build.

Table 6-2: Stabilizer Decision Matrix

Stabilizer Options							
Design		**Orthogonal 2-hinge**		**Orthogonal 1-hinge**		**Parallel**	
Criteria	**Weight**	**Rating**	**Score**	**Rating**	**Score**	**Rating**	**Score**
Rover mass	2	2	4	10	20	8	16
Climb Angle	4	7	28	3	12	6	24
Robustness	8	5	40	8	64	3	24
TOTAL			**72**		**96**		**64**

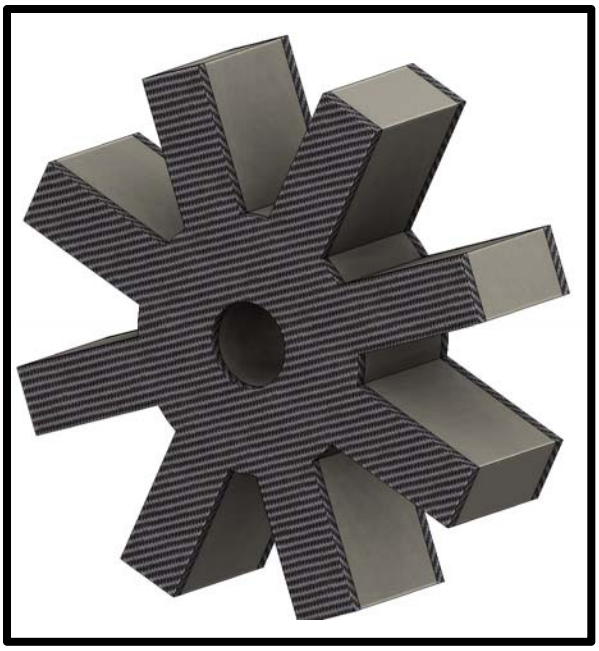

Figure 6-6a: Open Structured Wheel, Honeycomb Core, Carbon Fiber Shell

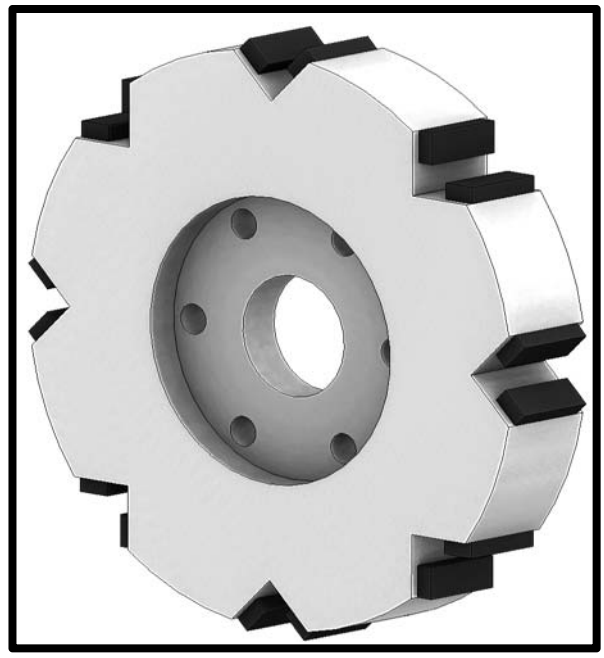

Figure 6-6b: Closed Structured Wheel with Polyurethane Grips

6.3. Drivetrain

The drivetrain is central to the success of a mobile rover. Without a robust system that can withstand: the immense forces of flight, the large stresses upon landing, and the variability of ejection, the mission cannot succeed. Components of the drivetrain that are essential to the functionality are the motors, the motor drivers, and the wheels. Each system has multiple design options that will create variable performance results when implemented. By exploring each option, it will be possible to quantitatively derive an optimal solution that will justifiably meet all engineering specifications of the mission while providing consistent and repeatable results.

6.3.1.1. Wheels

Broadly speaking, there are an immense number of wheel designs that can be used to traverse uneven terrain. However, the scope of wheel design can be placed into three categories: closed structure, open structure, expandable structure. A closed structured wheel has a large outer diameter surface area with small cuts into the exterior of the wheel to provide tread and traction for moving about difficult terrain. In Figure 6-6a, the focus of this specific configuration is quickly traveling over all types of surfaces without burrowing or losing contact with the ground.

An open structured wheel consists of a central hub that attaches to the drive shaft with long fins extruding from the center. The focus of a system such as the one in Figure 6-6b is a consistent method of “climbing” uneven objects. Because the extruding fins can catch on objects above level ground, it is possible for this wheel configuration to move freely over unexpected terrain such as large rocks, plants, or other obstacles found in a field environment.

Finally, an expandable structure provides higher ground clearance for the specific rover design and constraints. Using a 5-inch outer diameter airframe constrains the wheel outer diameter for this specific application to about 4.5 inches. Upon deployment, a rover with this wheel size can come into ground clearance problems under certain design decisions. By fabricating a custom wheel that can expand upon deployment, it will provide a means to

Figure 6-8a: Extended Expandable Wheel Structure, Diameter of 6.2 inches

Figure 6-8b: Compressed Expandable Wheel Structure, Diameter of 4.5 inches

mitigate ground clearance difficulties. In Figure 6-8**,** an aluminum hub will house a set of carbon fiber tubes. They will be internally spring loaded and prepped in an external housing inside the airframe. When the rover is deployed from the airframe, it will shed the external housing and the wheels will expand to provide a significant increase in wheel outer diameter as seen in Figure 6-8.

Each wheel design provides its own unique positive and negative characteristics. Using a set of engineering specifications that outline the basic requirements of the rover wheels, it is possible to quantitatively select the best option. The following requirements were considered and are scored in Table 6-3:

- Rover Mass: Measured in pounds and is necessary to minimize.
- Volume: Measured in cubic inches and is necessary to maximize when deployed.
- Ground Clearance: Measured in inches and is necessary to maximize when in motion.
- Number of Moving Parts: Measured in a quantitative number and is necessary to minimize to reduce complexity.
- Obstacle to Overcome: Measured in inches and is necessary to maximize to ensure all obstacles will be overcome.
- Coefficient of Friction: Unit-less parameter to be maximized to not allow slipping during motion.
- Ratio of Successful Tests: Measured as a percentage of total tests and is the leading indicator of a robust system.

By weighting the engineering specifications according to their importance to the functionality, robustness, and repeatability of rover use, the ratio of successful tests must be considered above all other parameters because of the necessity of functional payload delivery, while rover mass and obstacles to overcome are less important because of detection methods and rocket stability design.

Table 6-3: Wheel Alternatives Decision Matrix

Wheel Alternatives							
Design		Open Structure		**Closed Structure**		Expandable Structure	
Requirement	Weight	Value	Score	Value	Score	Value	Score
Rover Mass	1	10	10	2	2	5	5
Volume	4	5	20	5	20	10	40
Ground Clearance	6	3	18	9	54	10	60
Number of Moving Parts	5	9	45	10	50	2	10
Obstacle to Overcome	3	7	21	5	15	4	12
Coefficient of Friction	5	2	10	6	30	4	20
Ratio of Successful Tests	10	4	40	7	70	4	40
Totals		**164**		**241**		**187**	

Even though the open structure provides a light frame capable of traversing all types of obstacles, the concerns of burrowing in soft ground and lack of directional control from a controls perspective makes it an inferior option. The expandable structure is very strong in its volume constraints and its ability to provide significant ground clearance because of the spring-loaded nature of its arms. However, because of the increased complexity of the design and its inherent risk with a minimum of twelve moving sections, the expandable structure does not perform when considering robustness and the ability to overcome difficult terrain.

The closed structure option will be used on the rover payload because of the robust nature of its structure along with having no glaring weaknesses except for having a high weight. Because there is so much variability in this mission, it is highly important to have design decisions be as flexible as possible, and a closed wheel structure offers this option.

6.3.1.2. Motors

Motor choice is very limited because of the design constraints. Even though the amount of commercial motors available is endless, the operating envelope of the rover motor housing is about 1.5” x 1.5” x 2”. Furthermore, using specific parameters m as the mass of the rover, v assumed to be five feet per second, and R to be the wheel radius, in Equation 6-1 the motor needs to provide 30 watts of power and have a torque of 2.5 pound-inches as shown in Equation 6-2.

$$P = m * g * v \qquad \text{Equation 6-1}$$

$$T = \frac{P * R}{v} \qquad \text{Equation 6-2}$$

To reduce manufacturing complexity, a stock motor with a built-in gear reduction will be used, thus reducing motor options further. Based off the size envelope, motor performance requirements, and motor design, three options were investigated: brushless gear motors, brushed high rpm gear motors, and brushed high torque gear motors.

Figure 6-11a: GHM-04 Spur Gear brushed motor.

Figure 6-11b: Pololu Metal brushed gear motor.

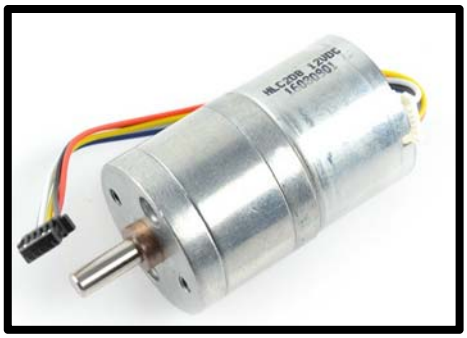

Figure 6-11c: FIT 0441 Brushless DC Motor.

Brushless gear motors combine high energy efficiencies with longevity. They can operate at very high rpm levels and dissipate heat excellently. However, these motors are uncommonly found with integrated gear reduction and have somewhat poor documentation on the ones that are commercially available. Brushed motors do not allow for as high efficiency peaks as brushless motors but do offer reliability, less hardware requirements for driving purposes, and higher torque ratings for low size envelopes. High rpm brushed gear motors could move the rover at high speeds on most terrain but do run the risk of getting stuck in soft ground while high torque brushed gear motors can provide more complex escape maneuvers but do not have high maximum velocity states. The engineering specifications for motor selection were the following and are weighted in Table 6-4:

- Rover Mass: Measured in pounds and is necessary to minimize.
- Operates Within Temperature: Measured in operating temperature and is necessary to have a high range.
- Obstacle to Overcome: Measured in inches and is necessary to maximize to ensure all obstacles will be overcome.
- Motor Power: Measured in watts and is necessary to minimize to save battery life.
- Maximum Velocity: Measured in rpm and is necessary to maximize to keep operation time to a minimum.
- Torque: Measured in pound-inches and is necessary to maximize to reduce probability of getting stuck.
- Documentation: Measured as a qualitative look at the amount of data available on the option.
- Volume: Measured in cubic inches and is necessary to minimize to fit in operational envelope.

By weighting the engineering specifications according to their importance to the functionality, robustness, and repeatability of rover use, the motor power is essential to integration with batteries and optimal performance of the rover while the mass, volume, and maximum velocity are secondary design considerations.

Table 6-4: Motor Decision Matrix

Motor Alternatives							
Design		**GHM-04 Spur Gear**		Pololu Metal Gearmotor		FIT 0441 Brushless DC Motor	
Requirement	Weight	Value	Score	Value	Score	Value	Score
Rover Mass	1	6	6	3	3	3	3
Operates Within Temperature	2	3	6	3	6	7	14
Obstacle to Overcome	4	7	28	4	16	3	12
Motor Power	8	3	24	6	48	4	32
Maximum Velocity	3	4	12	8	24	4	12
Torque	6	8	48	5	30	3	18
Documentation	4	8	32	5	20	2	8
Volume	2	5	10	5	10	2	4
Total		**166**		**157**		**103**	

The GHM-04 Spur Gear motor, which is a high torque brushed gear motor was selected to be used as a driving option. It offers high torque, quality documentation, and the best chance of escaping situations that could cause the rover to lose movement capabilities. Even though it does not dissipate heat well or offer the highest power option, this specific motor will allow for the best maneuverability solution.

6.3.1.3. Motor Drivers

A motor cannot be driven by a low current control signal without first being amplified to levels high enough for operation. For this reason, the motor drivers are crucial to driving the motors on the rover to complete its mission. Due to size constraints of the rover, the selected motor, and a limited battery supply, the amount of available motor driver options is reduced to a small range of choices.

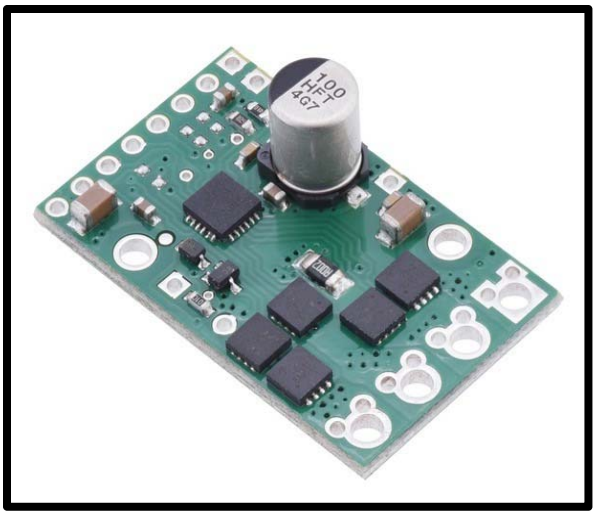

Figure 6-15a: Cytron 10A 5-25V Dual Channel DC Motor Driver

Figure 6-15b: Pololu Dual MC33926 Motor Driver for Raspberry Pi

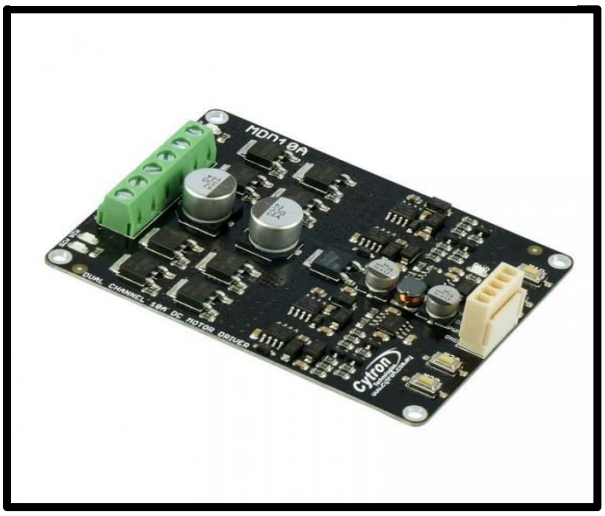

Figure 6-15c: G2 High-Power Motor Driver 23v13

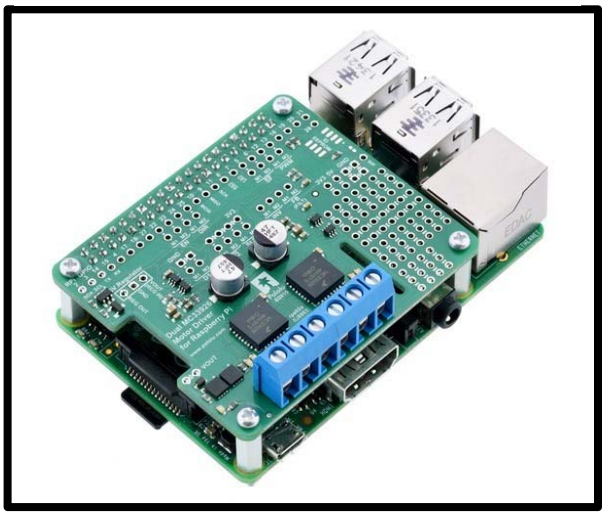

Figure 6-15d: Cytron 13A, 5-30V Single DC Motor Controller

Of the available options that were investigated, two were single channel motor drivers, and two others were dual channel motor drivers. While single channel drivers need to be purchased as two separate modules, the main advantage is the ability to mount the drivers on the chassis in more configurations due to their smaller and separate volumes, as compared to the dual channel drivers. The main advantage to using dual channel drivers are higher power efficiency, which is more heavily weighted than the volume requirements. Being power efficient is essential due to the limited power supplied by the battery, whereas volume requirements have more flexibility when mounting the modules.

The option of creating a custom H-bridge driver was also briefly explored, however it was decided that the time to design and tune a reliable motor driver would hinder the first prototyping phase significantly. For that reason, the custom driver was not put into consideration for the rover. The four commercial motor drivers were evaluated and selected based on the following engineering requirements:

- Voltage Rating: Measured as the voltage range at which the motor driver(s) can operate at. Having a large range in the voltage allows for more flexibility in providing power for the motor driver.
- Current Rating: Measured as the amount of current that can be supplied by the motor driver. The maximum expected current for the motor consume is 4.1 Amps, and providing extra head room will ensure that the driver will not be damaged during operation.
- Volume: Measured in cubic inches, reducing this value is necessary to provide enough space for all rover systems to be adequately mounted onto the chassis.
- Weight: Measured in pounds, the amount of weight each motor driver adds to the overall rover. Should be reduced to a minimum.
- Documentation: Measured as the amount of documentation available for each motor driver to help with integration and troubleshooting.

The engineering specifications were weighed with an emphasis on power efficiency, and a secondary focus on physical constraints such as volume and weight. Power efficiency in this case was determined by the current rating, since voltage ratings were uniform across the available options. These weightings were then used to create the motor driver decision matrix in Table 6-5.

Table 6-5: Motor Driver Options Decision Matrix

Motor Driver Options									
Design		G2 24V13		Cytron Single Channel		Cytrol Dual Channel		**Dual MC33926 Motor Driver for Raspberry Pi**	
Requirement	Weight	Value	Score	Value	Score	Value	Score	Value	Score
Voltage Rating	10	10	100	10	100	10	100	10	100
Current Rating	10	6	60	6	60	8	80	10	100
Volume	5	10	50	4	20	8	40	6	30
Weight	2	8	16	5	10	6	12	5	10
Documentation	2	4	8	5	10	5	10	6	12
Total		**234**		**200**		**242**		**252**	

The Dual MC33926 Motor Driver for Raspberry Pi proved to be the best fit for the chosen motors as shown in the decision matrix. Not only does it have the highest power efficiency of the four options, it offers decent documentation and easily integrates with the microcontroller that was chosen to control the rover. Even though the volume of the MC33926 driver is larger than the other options, the module saves space on the rover because it is a partial kit that mounts directly on top of the Raspberry Pi.

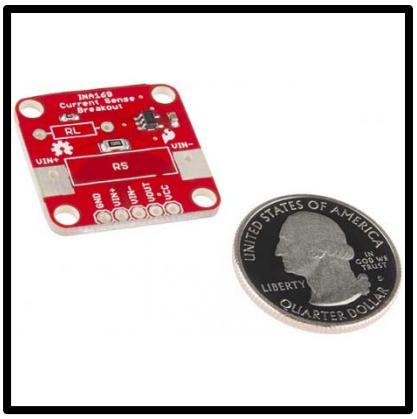

Figure 6-18a: INA169 Current Sensor

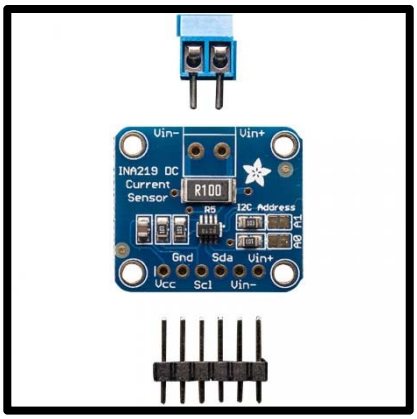

Figure 6-18b: INA219 DC Current Sensor 26V ±3.2A Max

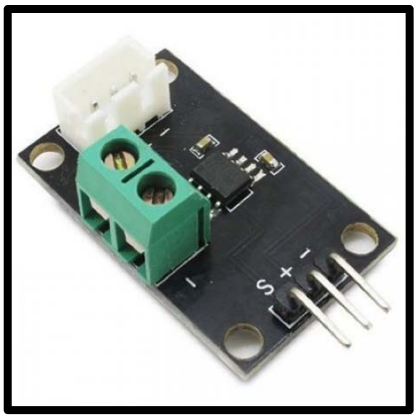

Figure 6-18c: Electronic Brick ±5A ACS712 Current Sensor

6.3.1.4. Over-Current Protection

If the motors were to encounter a situation where unrecoverable stalling occurs, the excess current draw will eventually damage the motors and the drivers. When the motor stalls, the selected motor driver will be operating at peak current output for an extended period, which is not how the module was intended to be used. To ensure that the motors and motor drivers are not damaged, overcurrent protection will be implemented with the use of a DC current sensor in a feedback loop. When the sensor detects stall-level currents, it will send a signal back to the microcontroller to cut off power to the motors, and determine what the next course of action is to escape stalling conditions.

Three options were found for the current sensing modules, each differing in terms of sensing ranges, size, and method of implementation. Each sensor measures current through a shunt resistor and outputs a corresponding voltage reading, however the difference comes from the flexibility that each module offers.

A downside to the modules shown in Figure 6-18b and Figure 6-18c is that they both output data in a digital format, which require additional hardware to read. Another downside to the latter two options is their lack of flexibility in measuring current. Both are fixed to reading their respective current levels, which can prove problematic in the future if adjustments need to be made to the feedback system. The INA169 Current Sensor in Figure 6-18a requires no additional hardware to read data because it outputs an analog voltage. Flexibility in the INA169 is much greater than the other two options since the output voltage can be set by choosing specific shunt and load resistor values. The only downside is the need to search for specific resistor values from other vendors. These advantages and disadvantages for each current sensor are categorized into the following engineering requirements:

- Current Sense Range: Measured as the maximum current that can be sensed with the given module.
- Flexibility: Measured as how easily the current sense range can be modified with the fewest amount of adjustments.
- Ease of Integration: Measured as the amount of additional hardware needed to implement the given sensing module. This should be minimized.
- Size: Measured in squared inches, reducing this value is necessary to provide enough space for all rover systems to be adequately mounted onto the chassis.

- Weight: Measured in pounds, the amount of weight each current sensing module adds to the overall rover. This should be minimized.
- Documentation: Measured as the amount of documentation available for each current sensing module to help with integration and troubleshooting.

The engineering specifications were weighted with an emphasis on current sensing range and flexibility of the module. Secondary focus was based on the physical constraints such as ease of integration, size and weight. Ease of integration also plays a role on the overall size and weight of the rover because additional hardware may be required. These weights were used to create the current sensor decision matrix in Table 6-6.

Table 6-6: Current Sensor Decision Matrix

Current Sensor Options							
Design		**INA169 Current Sensor**		INA219 Current Sensor		Electronic Brick ±5A ACS712 Current Sensor	
Requirement	Weight	Value	Score	Value	Score	Value	Score
Current Sense Range	10	8	80	6	60	8	80
Flexibility	8	10	80	6	48	7	56
Ease of Integration	5	8	40	8	40	5	25
Size	4	8	32	8	32	6	24
Weight	4	9	36	9	36	6	24
Documentation	2	6	12	6	12	5	10
Total		**280**		**228**		**219**	

After evaluating each current sensor based on the engineering requirements, the INA169 was found to be the most practical of the three options. In the case where analog to digital converters were not available to read the analog signal of the sensor, the output voltage can be manually set to read as a logic high value for the central microcontroller when stall currents are encountered. Output voltage is easily adjusted by simply changing the resistor values since the sensor module relates shunt current to output voltage by the following Equation 6-3:

$$V_O = \frac{I_S R_S R_L}{1k\Omega} \qquad \text{Equation 6-3}$$

Later, if the rover system is found to need a redesign, the current sensor can be reused due to its high flexibility and ease of integration. An overview schematic of motors, motor drivers, and overcurrent protection can be found in Figure 0-2 in Appendix A.

6.3.1.5. Integration

Using the wheel and motor designs depicted in Table 6-3 and Table 6-4 a drivetrain sub-assembly was constructed to encapsulate the entirety of the driving functionality design. The closed-structured wheel will be made from ¾" HDPE. The outer diameter will be 4.5" to fit inside the airframe and will be laser cut to yield treads for increased performance. Furthermore, polyurethane strips will be attached using adhesive epoxy. These strips will increase the coefficient of friction of the wheels and the ground while providing extra horizontal force when

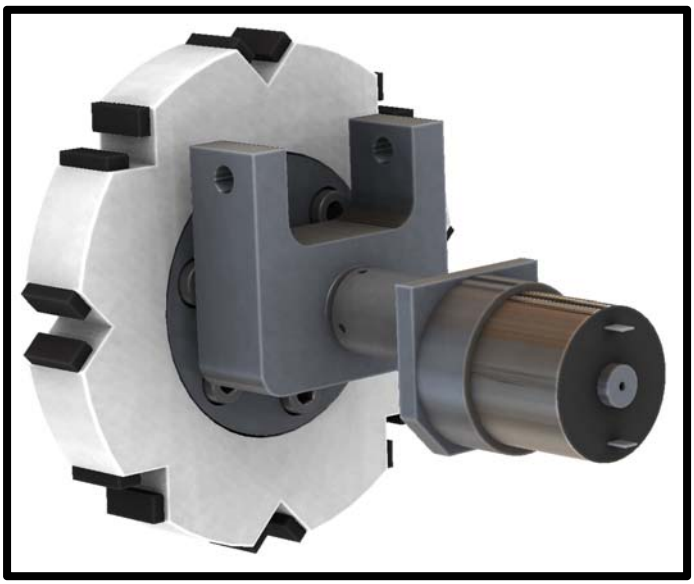

Figure 6-20a: Drivetrain assembly

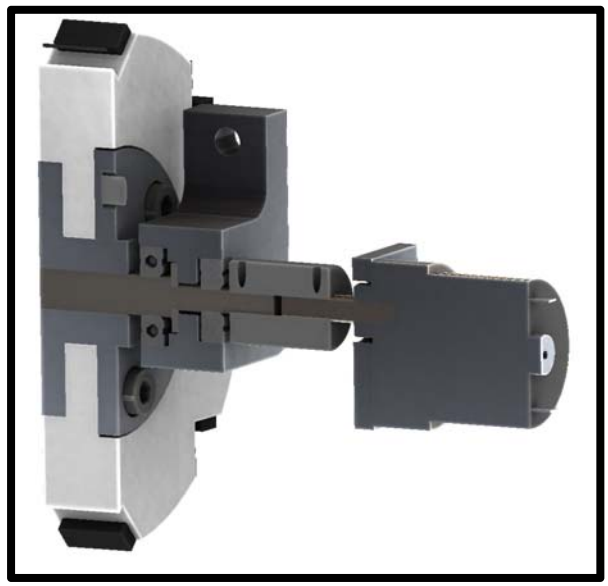

Figure 6-20b: Cross-sectional view of drivetrain for viewing of bearings

driving over soft ground. An aluminum hub and mounting plate combination will sandwich the wheel and couple it to the driveshaft. This design allows for low shear forces on fasteners when the wheels are endurance tested. Furthermore, the aluminum will give a rigid central frame for the wheels when placed under high compressive loads during launch.

The driveshaft will be constructed from a solid axle with four step diameters. The first and largest extrusion will be 10 mm to directly interact with the aluminum-mounting hub. This will be stepped down after 0.84 inches to 0.375 inches for a ball bearing with 315 lbs. static load rating. After a 0.5 inch, another step will be made to 0.5 inch for a thrust bearing and a second journal bearing, this with a 200 lbs. static load rating. Finally, after another 0.5 inches the shaft will be stepped to 6 mm to couple with the motor through a flexible aluminum coupler. The motor has a maximum torque of 7.81 lbs.-in. and a maximum speed of 175 rpm. The power rating of the motor at maximum torque is 28 W. Two thrust bearings with 100 lbs. load capacity will sit on the second step to absorb load from the external structure to the truss frame. All components will be well lubricated and fastened together in the final construction with Loctite to ensure no ductile metals become projectiles. The bearing assembly will connect the drive train to the chassis via a U-block fastened at the connection points of the carbon fiber rod cross-brace and its corresponding aluminum block. The final drivetrain assembly can be seen in Figure 6-20, and Figure 6-21 and weighs 1.68 lbs. for both drivetrain sections.

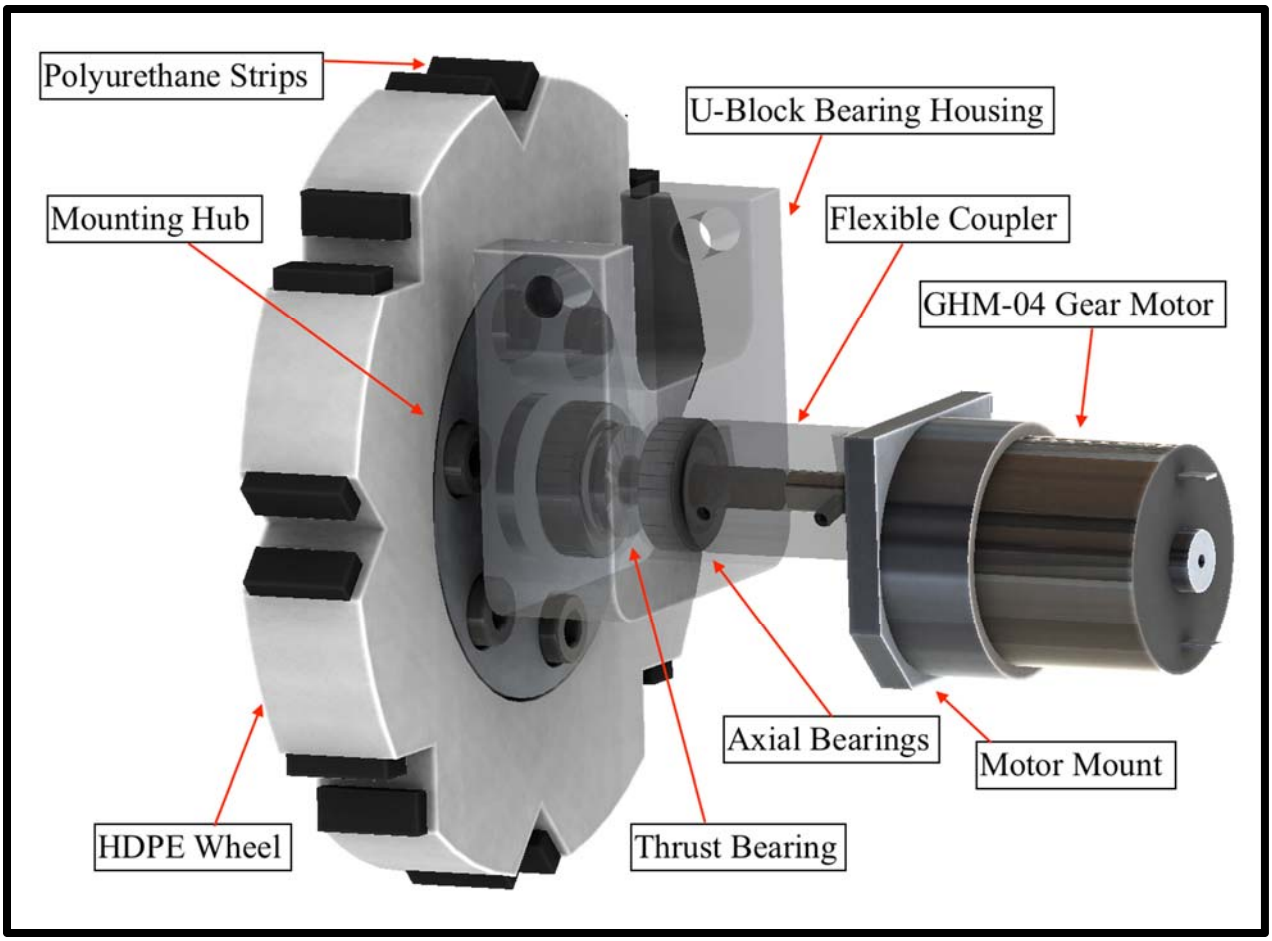

Figure 6-21: Drivetrain Sub-Assembly

6.3.2. Sensors

Upon safe recovery of the rocket, the payload rover must be able to autonomously navigate at least 5 feet in any direction away from all pieces of the rocket housing. To accomplish this task, multiple sensors on board the rover will be used for basic object detection and autonomous navigation purposes. The sensors must withstand significant acceleration as well as heavy vibration forces from the launch and recovery. Due to these high demands, the chosen sensors must have a high durability rating. Size and weight are also limiting factors in the design and selection of sensors for the rover, as there is a miniscule amount of space on board for components to be mounted. Battery selection also falls under this size and weight restriction which in turn places a restriction on the current that each sensor can draw. A highly sophisticated sensor tends to draw a large amount of current which would not be suitable due to the limited amount of charge capacity available on the payload batteries. Detection range of the sensors is not as critical of a factor as those previously listed since the rover is not travelling an extensive distance. A detection-range of 5 feet or less is suitable for the demands of the rover navigation in this competition.

6.3.2.1. Object Detection Alternatives

The justification for the chosen engineering requirements and corresponding weights is shown below. See Table 6-7.

- Rover Mass: The mass of the rover is a critical requirement due to the weight restrictions on the entire rocket and the payload housed inside. A heavy sensor would be detrimental to the mass of the payload and ultimately the propulsion requirements of the rocket. A requirement weight of 10 was given to rover mass due to these weight restrictions.
- Volume: The physical space that the rover chassis has available is also a critical requirement. Thus, the volume that the on-board object detection sensors occupy must be minimized at all costs. A requirement weight of 10 was given to volume due to the limited mounting area present on the rover.
- Detection Range: The detection range of the sensor was given a requirement weight of 4 because the rover is only required to autonomously navigate 5 feet in any direction away from the rocket. This is not as critical of a requirement due to the minimal traveling distance that is required.
- Detection Reliability: The detection reliability of the object detection sensors was given a requirement rating of 7 due to the need to produce an accurate range reading from the sensors.
- Number of moving parts: A weight of 8 was given to the number of moving parts required. This is because the rocket and payload electronics will experience heavy vibration and G forces during launch, recovery, and landing. Having moving parts on the sensor modules would be a detriment in this case and would have a high chance of failure under these extreme forces.
- Battery discharge time: The current consumption of the sensors is important because of the limited amount of battery capacity available on the rover. However, all the object detection sensors have a very low nominal current draw and do not significantly contribute to the draw on the battery system when compared to other on-board components like the motors and microcontroller. This requirement was given a weight of 3 due to this fact.
- Number of sensors needed: The number of required sensors for object detection was given a weight of 6 because the sonar and radar alternatives would need multiple sensors, whereas the LIDAR alternative would only require one sensor.

Table 6-7: Object Detection Decision Matrix

Object Detection Alternatives							
Design		**LIDAR**		**SONAR**		**RADAR**	
Requirements	**Weight**	**Value**	**Score**	**Value**	**Score**	**Value**	**Score**
Rover Mass	10	2	20	8	80	8	80
Volume	10	1	10	6	60	6	60
Detection Range	4	9	36	6	24	5	20
Detection Reliability	7	8	56	7	49	5	35
Number of moving parts	8	2	16	9	72	9	72
Battery discharge time	3	3	9	9	27	7	21
Number of sensors needed	6	7	42	3	18	3	18
TOTAL		**189**		**330**		**306**	

The object detection alternatives for the rover sensors include LIDAR, sonar, radar, and Time of Flight (ToF) cameras. LIDAR components have the longest detection range and provide reliable readings; but they lack durability, have larger current draws, and are very large in dimensions and weight. LIDAR modules also typically spin 360 degrees to map out the surrounding environment. In a high stress environment that requires protection against large forces, any component with critical moving parts is not suitable. ToF cameras provide an accurate object detection method and are very small in size and weight. They also require a low nominal current to operate. The downside to the ToF cameras is that they do not operate well under conditions with lots of light, such as in direct sunlight. The rover could be operating in direct sunlight after landing depending on the weather on launch day; this makes ToF cameras not a suitable alternative for the rover. Radar and sonar methods are similar in that they are small, have low current draw, and provide the detection range required. Sonar proved to be the more viable alternative due to the wide availability of sonar modules, and extensive documentation on detection techniques using sonar devices as seen in Table 6-7.

Figure 6-24a: LIDAR-Lite3

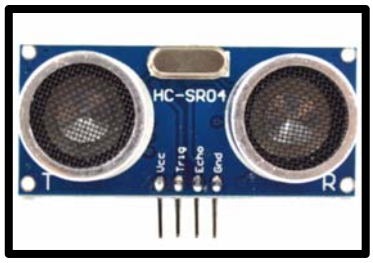

Figure 6-24b: HC-SR04 Ultrasonic Range Finder

Figure 6-24c: MB7360 Sonar Module

6.3.2.2. Sonar Sensor Alternatives

Many alternative sonar components were researched, comparing physical size, current draw, detection range, detection reliability, number of sensors needed, and durability. The LIDAR-Lite 3, in Figure 6-24, is the most accurate range finding sensor with the largest detection range. LIDAR sensors send out laser pulses and measure the time of flight to calculate a distance reading. The LIDAR-Lite 3 housing is large both in physical volume as well as mass. The component also has a significant current draw of 105 mA when idle and 130 mA during continuous operation. Despite the ranging accuracy and distance capabilities the LIDAR-Lite 3 was not a viable solution due to its large size and current consumption. The HC-SR04 Ultrasonic Range Finder, shown in Figure 6-24, provides similar ranging capabilities, frequency band, current consumption, and size to the MB7360 HRXL-MaxSonar-WR. However, the module does not have a durability rating and is a lower quality option compared to the MB7360, see Table 6-8 shows four alternative sonar components for object detection purposes on the deployable rover. All the alternatives come from the same product family of the MaxBotix MB Max-Sonar series. Each of these sonar modules has roughly the same physical layout, size, and weight as the MB7360 component shown in Figure 6-38. The differences between these components lie in the detection beam patterns and durability ratings. The MB1020 has a wide detection beam pattern whereas the MB1040 has a narrow detection beam pattern. The downside to both the MB1020 and MB1040 components is that they are not available with an outer casing that provides durable protection. Finally, both the MB7062 and the MB7360 sensors are available with a protective outer housing and both produce relatively narrow beam patterns. The component datasheets specify that the MB7062 is more suitable for stationary applications, while the MB7360 sonar sensor performs better in applications such as robot ranging sensors and autonomous navigation, both of which suit this project perfectly.

Table 6-8: Sonar Alternatives Decision Matrix

Sonar Alternatives									
Design		**MB1040 LV-MaxSonar-EZ4**		**MB1020 LV-MaxSonar-EZ2**		**MB7360 HRXL (Compact/IP67)**		**MB7062 XL-MaxSonar-WR1**	
Requirements		**Value**	**Score**	**Value**	**Score**	**Value**	**Score**	**Value**	**Score**
Rover Mass	10	6	60	6	60	5	50	5	50
Volume	10	6	60	6	60	5	50	5	50
Detection Range	4	6	24	5	20	6	24	6	24
Detection Reliability	7	6	42	5	35	8	56	6	42
Durability	10	3	30	3	30	8	80	8	80
Battery discharge time	3	6	18	6	18	5	15	5	15
Number of sensors needed	6	3	18	3	18	3	18	3	18
TOTAL		**252**		**241**		**293**		**279**	

The MB7360 HRXL-MaxSonar-WR component was chosen over the other sonar modules mainly due to its high durability and IP67 environmental protection rating as seen in Table 6-8. The IP rating stands for the Ingress Protection rating, where the first digit represents the protection rating against solid objects and the second digit represents the protection from liquids. The IP67 rating denotes that the component is protected from dust and is water resistant in water levels ranging from 15 centimeters to 1 meter. The compact outer housing adds a slight amount of mass to the component but also provides a vast amount of protection both against weather and outside forces acting on the electronics contained inside. See Figure 6-25. Despite the increase in weight on the MB7360, it was a justifiable decision due to the extra protection that is provides to the delicate sensor housed inside. The MB7360 has a detection range of up to 5 meters which is sufficient for the needs of the rover in this competition. The component operates at a frequency of 42kHz, a voltage of 5V, and has a low nominal current draw of 3.1mA. The range reading from this sonar sensor can be sent to the microprocessor on board the rover in an analog, pulse width modulation, or serial format. Pulse width modulation was the chosen technique on which to transmit the range data to the on-board micro-controller.

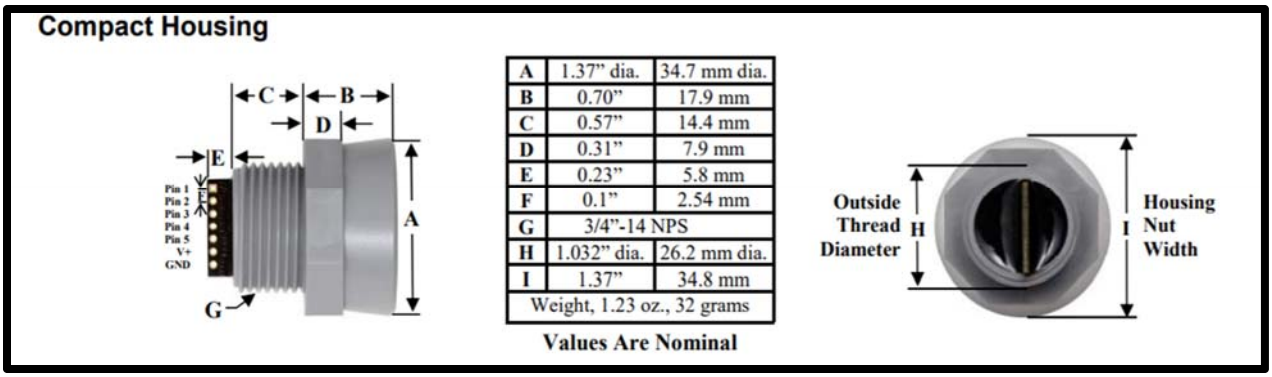

A	1.37" dia.	34.7 mm dia.
B	0.70"	17.9 mm
C	0.57"	14.4 mm
D	0.31"	7.9 mm
E	0.23"	5.8 mm
F	0.1"	2.54 mm
G	3/4"-14 NPS	
H	1.032" dia.	26.2 mm dia.
I	1.37"	34.8 mm
Weight, 1.23 oz., 32 grams		

Figure 6-25: Dimensions of MP7360 Sonar Module

6.3.3. Rover Power Supply

This section will explain the design for the rover's power supply. It will incorporate the requirements of this mission, the power demands of our rover design, how the design will meet the mission requirements and power demands of our design, and how the design will be tested. For this mission, the rover must move five feet away from any part of the rocket. The rover's electronics must also be completely independent from every other system in the rocket. For the rover, the power supply must provide DC power to supply the its microcontrollers, microprocessors, sensors, motors, and drivers. The batteries must be able to provide at least 7.4V to supply the motors; furthermore, it must provide enough current to supply the whole system long enough for it to get five feet away from any part of the rocket. The rover's power supply will also have size constraints, due to the whole payload needing to be smaller than five inches in diameter. The size constraint most applies to the batteries, as the voltage regulator circuit will be small and on a PCB. At peak current, the rover will demand 9A, but its nominal current is less than 1.5A. The rover will require different voltage levels: 7.4V, 5.0V, and 3.3V. After researching different methods of meeting these requirements and power demands, it was found that using lithium polymer batteries joined with a switching voltage regulator would best fulfill them. Further justification, description, and test plan of the parts chosen are given below in the next two sections.

6.3.3.1. Batteries and Battery Protection

This mission requires the rover's electronics to be completely independent of any other system, which requires the rover to have batteries. The batteries for the rover need to be compact, so the rover's overall size does not exceed our five-inch diameter limit. The batteries will need to have a large enough capacity to supply the rover long enough for it to move five feet away from any part of the rocket. Lastly, the batteries must provide at least 7.4V to drive the motors and can output a peak current of 9A. After researching different batteries, it was found that there are three major types of batteries to fulfill these requirements: Lithium Polymer (LiPo), Lithium Ion (Li-Ion), and Nickel Metal Hydride (NiMH).

LiPo batteries typically provide a nominal voltage of 3.7V with capacities ranging from 0.2-3Ah. They usually have pads or JST connectors for their battery contacts, and are sometimes PCB-protected. PCB-protected, means they have integrated circuits inside the battery packaging preventing them from being over-charged or over-discharged. They are usually packaged to be thin and flat batteries, which differs from many other batteries. They have the highest discharge ratings out of the three, and because of that they are typically used in high power RC vehicles. Li-Ion batteries also provide a nominal voltage of 3.7V with capacities ranging from 0.5-3Ah. They usually are cylindrical cells with either button top or flat top battery contacts. Li-Ion batteries can also come as both PCB-protected and non-PCB-

protected. Their discharge ratings are less than LiPo batteries and are in line with NiMH discharge ratings. Li-Ion batteries are commonly used in RC vehicles, cameras, and laptops. NiMH batteries provide a nominal voltage lower than the lithium batteries, only 1.2V. NiMH battery capacities are like the lithium batteries and range from 0.5-3Ah. They are usually packaged in large cylindrical cells with button top battery contacts. Most brands do not offer PCB-protected NiMH batteries. These are the largest batteries out of the three. They are used in the same type of products as Li-Ion batteries. Table 6-9 details the engineering requirements used for battery system decision.

Table 6-9: Battery Decision Matrix

Batteries									
Design		Samsung 26F 18650 (Li-Ion)		Tenergy 31033 (Li-Ion)		LG HG2 18650 (Li-Ion)		Turnigy Graphene (LiPo)	
Requirement	Weight	Value	Score	Value	Score	Value	Score	Value	Score
Capacity	8	5	40	7	56	7	56	5	40
Continuous Current	6	5	30	6	36	9	54	10	60
Protective IC	5	3	15	3	15	1	5	1	5
Form Factor	10	6	60	3	30	6	60	8	80
Totals		145		137		175		185	

The decision for the batteries came down to which one had the best form factor, capacity, and continuous current rating. The battery that best fulfilled these requirements was the Turnigy Graphene LiPo battery pack. Having four of these batteries in series will result in a total voltage of 14.8 V, while supplying a continuous 61A of current. These batteries come with JST battery connectors, which are more robust than spring battery contacts. These batteries were also selected for their form factor. They are long and flat batteries which makes them easier to fit into spaces on the rover. These batteries have a capacity of 950 mAh, which if discharged at a rate of 1.5 A will give 38 minutes of driving time. Having 38 minutes should be long enough to drive five feet away from any part of the rocket. These batteries are not PCB-protected; however, an automatic safety cutoff circuit will be designed to prevent over-discharging the batteries. Along with the safety cutoff circuit, there will be an LED battery level indication circuit and physical off switch. For these reasons, the Turnigy Graphene LiPo battery pack was chosen as the power source for the rover as shown in Figure 6-26.

To make sure these batteries will meet these requirements and power demands, testing will be conducted on the batteries. To test their capacity, they will be charged and then discharged with a load equivalent to the rover's while being timed to make sure they will last at least 25 minutes under full load. Their peak current will be tested by having them connected to the motors and then physically stalling the motors. Stalling the motors will draw 4.1A each, and will be the only time when the batteries will need to supply that much current. To test the safety cutoff switch and battery level indication the safety circuits will be connected to a power supply. By changing the output voltage, it can be seen if the LEDs and circuits turn off at the correct voltage levels.

Figure 6-26: Turnigy Graphene 950mAh 1S 65C LiPo Pack

6.3.3.2. Voltage Regulation

This mission requires the rover to move five feet away from any part of the rocket. To do this the rover must have some intelligence to know how to move and where to move. Our design will incorporate several different types of sensors and microcontrollers to provide this intelligence; however, they will all need to be powered by something. Therefore, a voltage regulator is necessary because all the electrical components on the rover need power at their specific voltages. Specifically, the power supply must provide enough current at 5V and 3.3V to supply everything attached to each power rail. At maximum current draw, each power rail will draw less than 1A of current. Along with being able to supply enough power to all the electrical systems, the regulator must have an enable pin, so the load can be cut off from the batteries during setup and launch. The regulator cannot be drawing power from the batteries while on the launch pad or during flight because it may run out of power by the time of deployment. It must also have a range of acceptable input voltages because the batteries will be dropping in voltage as they discharge. The regulator must also be efficient. There are two main types of voltage regulators, linear and switching, and both types would be able to meet these requirements. Research was done to see which option would best fulfill the requirements.

Linear regulators use linear components to take a higher voltage and regulate it to a lower voltage. They are simple to use and can only provide limited amounts of power. They are very inefficient due to dropping the voltage over resistors, converting a lot of energy into heat. Due to this inefficiency, linear regulators also suffer from getting too hot. Linear regulators are usually only used for powering lower power devices. Switching regulators are more complex but provide a lot of benefits along with that complexity. Switching regulators regulate voltage based on turning off and on the input voltage, resulting in a mean voltage at the desired output voltage, and are largely more efficient than linear regulators. They also do not get hot as easily. Switching regulators are usually used for higher power devices as well as power conscious devices because of their efficiency.

Table 6-10: Voltage Regulator Decision Matrix

Voltage Regulator									
Design		LM1575-5.0		LM2675N-5.0		LM2592HV-5.0		TPS54386PWPR	
Requirement	Weight	Value	Score	Value	Score	Value	Score	Value	Score
Output Current	8	6	48	6	48	8	64	10	80
Input Voltage Range	3	6	18	6	18	7	21	5	15
Voltage Variance	6	7	42	6	36	5	30	6	36
Number of Outputs	5	1	5	1	5	1	5	2	10
Totals		108		102		115		141	

Most of the regulators researched, could provide the desired output voltages while having a wide range of input voltages. The decision for the voltage regulator mostly came down to efficiency and power output. The voltage regulator which best fulfilled the requirements for the rover was the TPS54386PWPR switching voltage regulator. This regulator is efficient because it uses switching to regulate its voltages. This regulator has two outputs and can supply 3A continuously per output. The rover will only require less than 1A per output, so having 3A per output will be more than enough. It has a wide range of input voltages 4.5-28V, and the battery will always be within this range. This regulator can output voltages between 0.8-25V, so it can supply 5V and 3.3V. This regulator also has a power pad to help dissipate heat from the integrated circuit. For these reasons, the TPS54386PWPR switching voltage regulator was chosen as the voltage regulator for the rover's power supply as seen in Figure 6-27. The circuit design for the voltage regulator can be seen in Figure 0-3 in Appendix A.

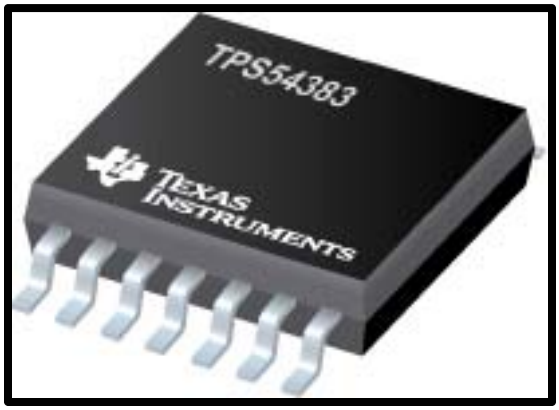

Figure 6-27: TPS54386PWPR Voltage Regulator

6.3.4. Ejection

6.3.4.1. Ejection Requirements

The process of decision-making regarding payload ejection required detailed review of a wide array of design ideas making use of existing technologies. Initially the team considered overall methods for putting the rover on the ground. Following design evaluation and a qualified decision, options were assessed which adhered to the overall method. Documented qualification of decisions along with a preliminary overview of the chosen design will be presented within this section of the report.

As stated in the USLI handbook, the system will have to adhere to the hard requirements outlined in Table 6-11.

Table 6-11: USLI Payload Ejection Requirement

Requirement Number	Requirement	Verification Plan
4.5.1	Teams will design a custom rover that will deploy from the internal structure of the launch vehicle.	Design qualification verifies chosen system adheres to requirement.
4.5.2	At landing, the team will remotely activate a trigger to deploy the rover from the rocket.	Documented subscale and full flight system testing.

6.3.4.2. Overall Ejection Method

Three general methods were explored for deploying the rover and a decision was evaluated based on derived engineering requirements. The requirements are weighted based on their importance relating to the subsystem completing its specific goal.

The first method is to have a split in the airframe which would be remotely activated to open when the team confirms successful recovery. The second is to implement a system which will eject the rover out an open end of the airframe which is exposed following the motor section separation from the payload bay. Finally, a design was considered which would make use of forces exhibited by parachute ejection to move the payload within the airframe to assist in some sort of ground ejection. Based on a comprehensive design matrix outlined in Table 6-12, the team will be considering an ejection method in which the payload will exit out the end of the airframe. The team considers this option to be reliable, durable, and repeatable for recurring launches. The parachute assisted method was scrapped because it would not actually be completing the requirement of ejecting the payload; additionally, its use would be questionable within NASA's governing competition rules. Finally having the airframe clamshell is viewed as unreliable considering the team will not implement any design to assist in landing orientation.

Table 6-12: Overall Ejection Method Decision Matrix

Overall Ejection Method							
Design		**Out the end Airframe clamshell**		**Out the end**		**Parachute assisted**	
Criteria	**Weight**	**Rating**	**Score**	**Rating**	**Score**	**Rating**	**Score**
Mass	**5**	7	35	3	15	2	10
Ease of activation	**2**	3	6	5	10	3	6
Reliability	**8**	1	8	6	48	2	16
Durability	**4**	5	20	5	20	4	16
Repeatability	**4**	2	8	4	16	3	12
TOTAL			**69**		**93**		**48**

6.3.4.3. Ejection Retention

The ejection team evaluated two methods for retaining the payload within the airframe during the launch sequence. This mechanism will have to endure large accelerations. The mechanism will also have to release upon a signal imposed by the launch team post recovery.

Solenoids were evaluated as one option for their ability to retain the payload. A system was designed with specified stock push-pull solenoids which would be controlled by an RF transmitter. A set of four solenoids, two on each end of the rover housing, would sit within an enclosed housing with the armature resting within a U-slot fixed to the airframe. Activation of the solenoid coil retracts the armature, releasing the device from its lock and allowing release. Table 6-13 and Figure 6-28 detail solenoid assembly mass and CAD.

Table 6-13: Solenoid Assembly Mass

PART:	MATERIAL:	UNIT WEIGHT: (lbs.)	QTY:	WEIGHT EST: (lbs.)
Solenoid	N/A	0.3	4	1.2
Solenoid Shear Pin	1215 Carbon Steel	0.035	4	0.14
Aluminum plate	6061 Aluminum	0.35	4	1.4
Threaded rod	6061 Aluminum	0.011	4	0.044
Solenoid Housing	6061 Aluminum	0.05	4	0.2
HDPE Plate	HDPE	0.176	2	0.352
Assorted screws, nut, washer	Aluminum	0.5	1	0.5
			Total Weight:	3.836

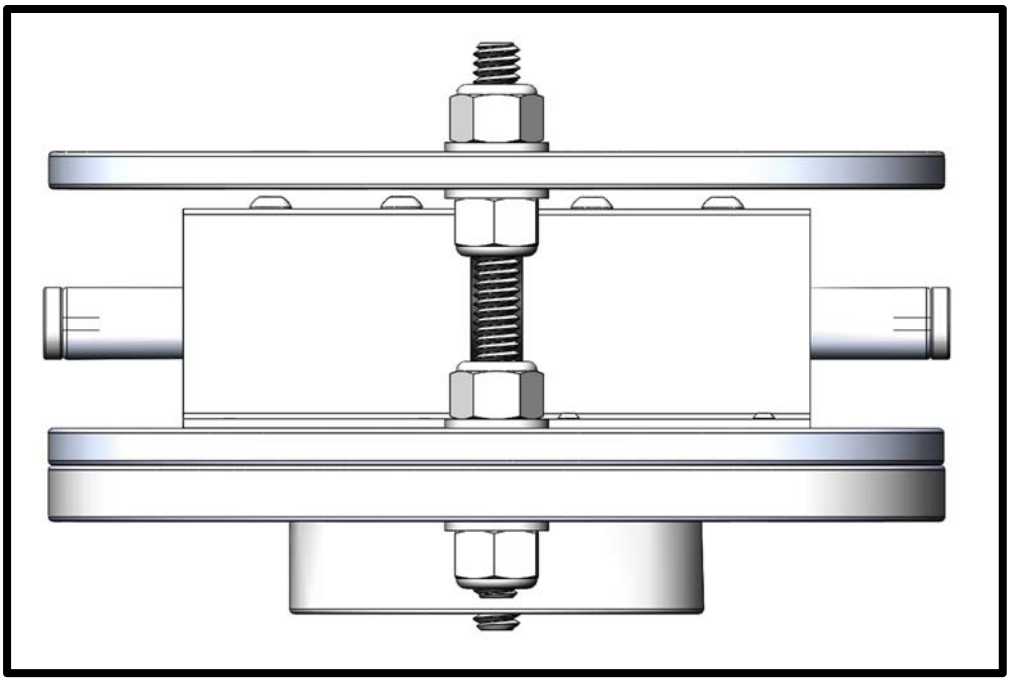

Figure 6-28: Solenoid Assembly

The final method considered is an Advanced Retention and Release Device (ARRD) capable of withstanding 2,000 lbs. of force along its axis of release and is seen in Figure 6-29. The device is manufactured for electrically initiated pyrotechnic events typically in the rocketry industry. Similar projects use an ARRD for parachute release with documented success. Release is initiated by Pyrodex or air pressure. Each release option will be tested for reliability upon procurement of the device.

A design matrix evaluating the ability of retention methods to adhere to related engineering specifications is within Table 6-14. The ARRD is viewed as a reliable, lightweight device which will be purchased and tested within a short timeframe. A solenoid assembly is reliable in its ability to hold and release the payload. The shortcomings of this design are its high mass, low durability, and difficult integration with avionics controllers.

Figure 6-29: Advanced Retention and Release Device

Table 6-14: Ejection Retention Methods Design Decision

Ejection Retention Methods					
Design		**ARRD**		**Solenoid**	
Criteria	**Weight**	**Rating**	**Score**	**Rating**	**Score**
Mass	**6**	6	36	3	18
Ease of activation	**4**	5	20	3	12
Reliability	**8**	5	40	6	48
Durability	**5**	5	25	3	15
Repeatability	**4**	3	12	5	20
TOTAL			**133**		**113**

6.3.4.4. Payload Ejection

Upon release of the ARRD, the payload will be sitting freely within the airframe. For the rover to explore the surrounding area, it needs to detach from its housing and be clear of the airframe. Methods to solve this problem require high reliability and low weight. Additionally, the system needs to withstand the flight and ground impact forces.

Figure 6-30: Linear Actuator

The first option considered is to use a linear actuator to plunge the payload out the end of the airframe. The actuator would be powered by a brushed DC motor and controlled by the circuit board operating the avionics and recovery system electronics. The downside of this decision lies in the stroke length requirement of the actuator. This solution can be seen in Figure 6-30**.** Due to payload bay length restrictions, there is a low tolerance for error in the system. Additionally, this system is relatively heavy and would require elaborate housing of the actuator to retain its alignment.

The second option considered is to run a lead screw fixed to an HDPE plunger head by lock nuts. The screw would be actuated by a stock lead screw motor shown in Figure 6-31 which implements a hybrid stepper motor rotating a nut which converts rotational to linear motion. Stock glide screws would need to span the screw at points determined by beam reaction force modeling to minimize bending within the rod. The lead screw needs to span the length of the rover plus a few inches of slack. This application is like using a linear actuator but viewed as more reliable and repeatable. The major issues are weight and size restrictions. This option was explored in detail and ultimately decided against due to the 20-inch payload bay length restriction.

Figure 6-31: Lead Screw

The final option is to employ black powder charges to propel the rover out from inside the rocket airframe. Black powder is a tested, reliable technology utilized in similar rockets to which OSRT will be manufacturing. This option is viewed as extremely reliable, and testing could begin with little manufacturing of parts required. Black powder is a lightweight solution which can be easily repackaged to operate in under an hour. Ultimately this option was chosen as seen in Table 6-15.

Table 6-15: Payload Ejection Decision Matrix

Payload Ejection Options							
Design		**Black powder**		**Linear actuator**		**Threaded rod**	
Criteria	**Weight**	**Rating**	**Score**	**Rating**	**Score**	**Rating**	**Score**
Mass	**6**	8	48	4	24	2	12
Ease of activation	**4**	6	24	5	20	2	8
Reliability	**8**	2	16	4	32	7	56
Durability	**5**	6	30	4	20	5	25
Repeatability	**6**	7	42	6	36	5	30
TOTAL			**160**		**132**		**131**

6.3.4.5. Final Payload Ejection Design

The final payload ejection design makes use of technologies assessed above. An ARRD will attach to a housing that surrounds and protects the payload. The housing will consist of two HDPE endplates and a flexible carbon fiber wrap. The payload will exist inside the housing held secure by a foam mold. The mold is not shown in the following figures. Once manufacturing of the rover is complete, manual cutting of foam will occur to protect critical components such as electronics. Cylindrical flexible foam sections will exist between the rover wheels and housing endplates to mitigate ejection forces along the axis of the axle. The CAD assembly can be referred to in Figure 6-34 respectively with the carbon fiber exterior hidden and shown. Figure 6-35 portrays an exploded view where each component can be viewed. A high-density foam section separates the housing from the ejection bulk plate to ensure forces are distributed evenly along the entire area. The final ejection subsystem is projected to have a mass of around 1.25 lbs. Individual components masses can be referenced in Table 616.

The carbon fiber exterior will be held to the endplates by a high strength epoxy spanning 90 decrees along the outer edge. Small slots are cut in the flexile carbon fiber sheet which will be held in place until release by protrusions on the HDPE endplates. The release point will be held together during flight by tying a release knot with high strength paracord which attaches to the ARRD. A graphical representation can be referenced in Figure 6-32. Upon release of the ARRD the carbon fiber sheet will be able to open to its natural open position and allow for the rover to exit. Any component of the foam mold surrounding the rover will not interfere with its ability to release from the housing.

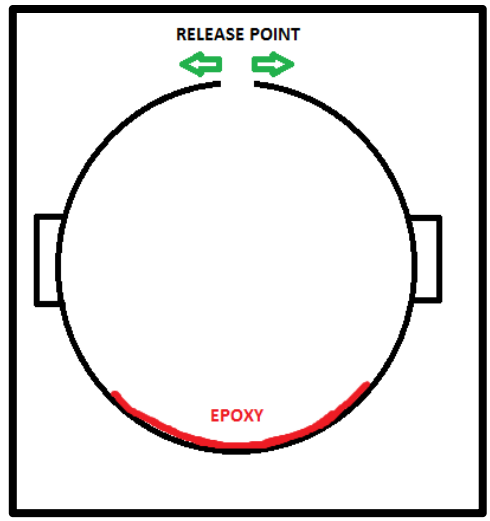

Figure 6-32: Carbon Fiber Attachment Diagram

Table 6-16: Ejection Assembly Mass

PART:	MATERIAL:	UNIT WEIGHT: (lbs)	QTY:	WEIGHT EST: (lbs)
Eyebolt	304 Stainless Steel	0.06069	1	0.06069
Eyebolt connector plate	6061 Aluminum	0.366	1	0.366
HDPE Plate	High-density polyethylene	0.253	1	0.253
Housing Endplates	High-density polyethylene	0.154	2	0.308
Foam top endcap	High-density foam	0.054	1	0.054
Housing wrap	Carbon Fiber	0.084	1	0.084
Insert Foam	Low-density foam	0.12	1	0.12
			Total Weight:	1.24569

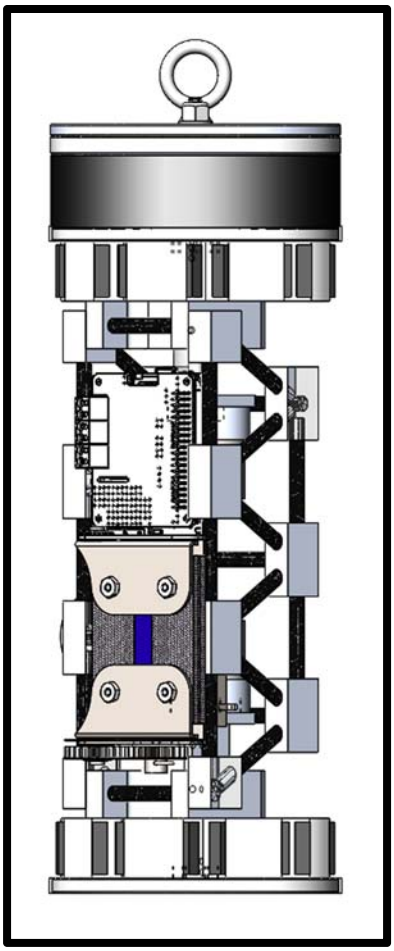

Figure 6-34a: Rover Housing Open View

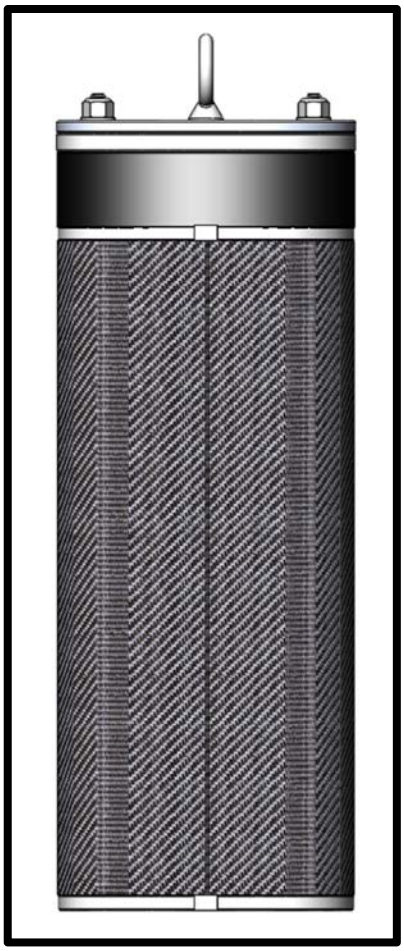

Figure 6-34b: Rover Housing Closed View

The ejection system is extremely critical and requires thorough testing. Manufacturing of an initial system will take place following the submission of this report. A dedicated volunteer sub team is responsible for testing feasibility of the ejection method. Testing will ultimately determine if redesign is necessary.

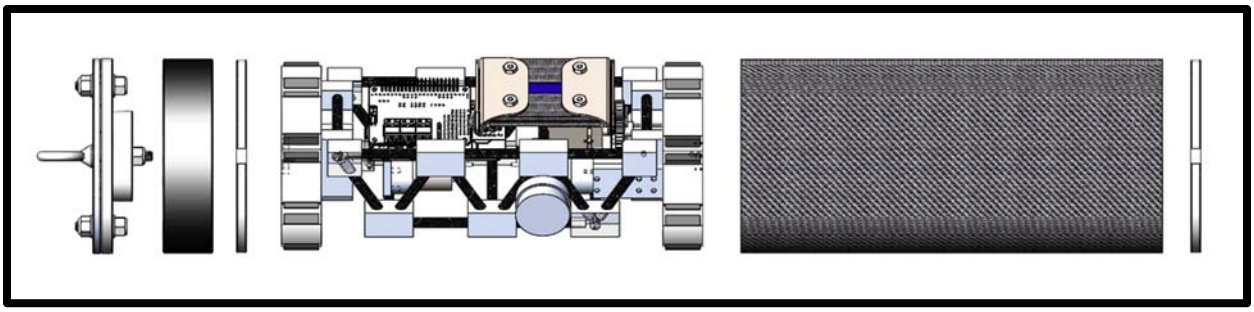

Figure 6-35: Rover Housing Exploded View

6.3.5. Solar

6.3.5.1. Panels

The only regulation for the solar panels is that they be real panels and not mockups. Therefore, the choice of solar panels will be dictated by their physical dimensions and power density. A selection of solar panels was chosen from the Digikey catalog that have the general dimensions on the order or magnitude of the launch vehicle inner diameter. The following Table 6-17 shows the options considered.

Table 6-17: Solar Panel Model Decision

Solar Panel Model						
Model	**Dim1 (in)**	**Dim2 (in)**	**Dim3 (in)**	**Voltage (V)**	**Nominal Current (A)**	**Power Density (W/in^3)**
KXOB22-04X3F-ND	0.87	0.28	0.07	1.5	0.013	1.19
SLMD121H04L-ND	1.69	0.55	0.08	2	0.045	1.21
SLMD481H08L-ND	3.5	2.17	0.08	4	0.2	1.34
SLMD960H12L-ND	1.65	1.38	0.08	6.1	0.036	1.22
1597-1417-ND	2.76	2.17	0.06	5.5	0.1	1.56
AM-1819	1.22	0.94	0.07	3	0	0
AM-5610CAR	0.98	0.79	0.07	3.3	0.005	0.31
AM-5902	5.91	1.48	0.07	5	0.061	0.49

The panels were chosen based on power density since these panels can fit inside the rover, and the model with the highest power density and the thinnest dimensions is the 1597-1417-ND. This panel outputs a maximum of 5.5 V. With two panels linked in series, the solar system can output a total maximum of 11 V, which is sufficient to charge any standard battery cell.

6.3.5.2. Deployment

The first decision regarding the solar panel deployment is whether the actuation is powered or spring-loaded. Because of the potential to have debris blocking the deployment mechanism, it will be more reliable to have an electric motor extend the folded panel. This motor can also have a power specification large enough to move obstacles blocking the deployment.

6.3.5.3. Actuation

The options considered were rotational unfolding, and rack and pinion based sliding. A flexible rolling panel was briefly considered, but flexibility was deemed too large a risk for faulty deployment. A rack and pinion system would require a rail system, while a single rotation would only need one pivot axis. A rotating system also allows for more flexibility when extended than a rail system. Two panels could be stacked upon on another arranged in a trifold configuration, but since there is no power or surface area goal, the simplicity of one panel is preferred. The decision matrix used is shown in Table 6-18.

Table 6-18: Solar Expansion Method Decision Matrix

Solar Expansion Method									
Design		**Rolling**		**Sliding**		**One Folding**		**Two Folding**	
Requirement	**Weight**	**Value**	**Score**	**Value**	**Score**	**Value**	**Score**	**Value**	**Score**
Rover Mass	5	8	40	7	35	5	25	3	15
Volume	7	7	49	5	35	7	49	4	28
Mechanical Complexity	4	3	12	6	24	5	20	8	32
Robustness	9	5	45	6	54	8	72	7	63
TOTAL		**146**		**148**		**166**		**138**	

The rotation required to unfold a solar panel is only 180 degrees, so a stepper motor or continuous rotation motor has little benefit over a standard operation servo, and a servo is much lighter than a stepper motor. There is a range of quality of servos, and model with metal gears are much more robust but add weight. Brushless motors provide a more responsive holding feedback and are generally more durable than brushed motors but cost more money. The decision matrix used for design criteria is shown in Table 6-19.

Table 6-19: Solar Panel Actuator Decision Matrix

Solar Panel Actuator							
Design		**Stepper Motor**		**Geared DC Motor**		**Limited Rotation Servo**	
Criteria	**Weight**	**Rating**	**Score**	**Rating**	**Score**	**Rating**	**Score**
Weight	8	2	16	6	48	8	64
Rotation Angle	2	8	16	8	16	4	8
Power Consumption	7	2	14	5	35	4	28
TOTAL		**46**		**99**		**100**	

6.3.5.4. Leading Design

Figure 6-37: Solar Array Assembly Unfolded

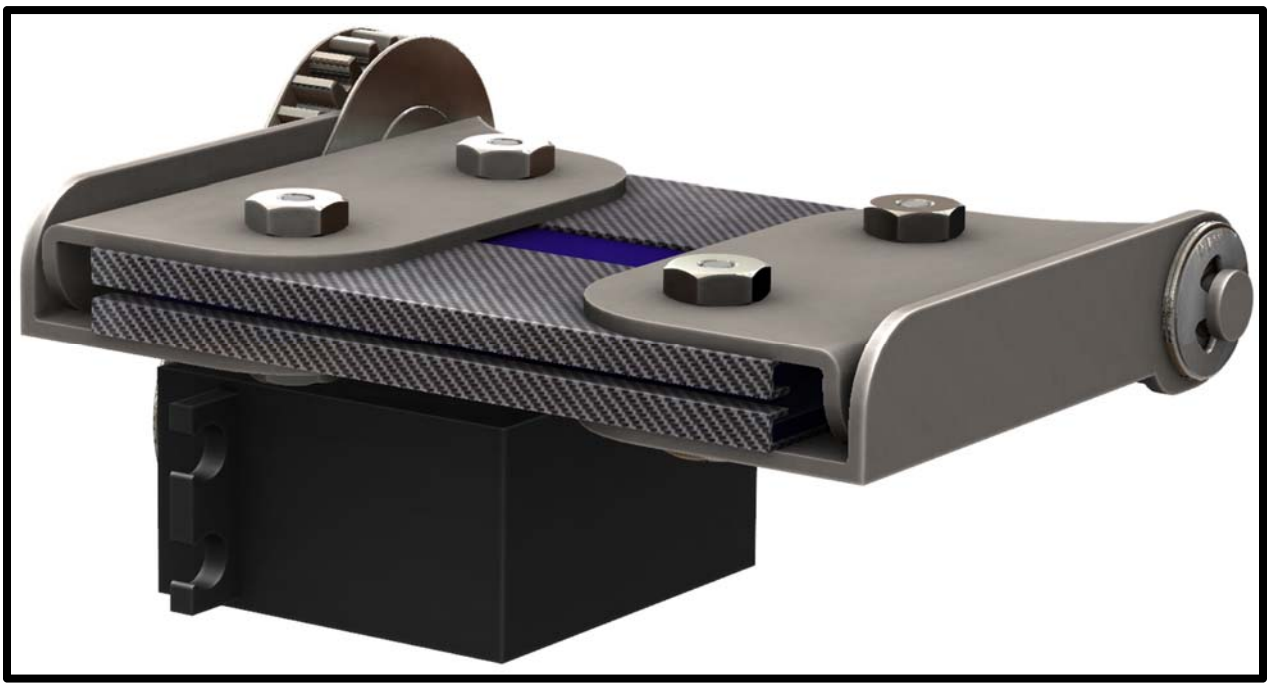

Figure 6-36: View of Solar Array Assembly Folded

The most effective and reliable design will use two 1597-1417-ND panels, shrouded in protective carbon fiber trays. The assembly has one hinge axis, which is powered by a single brushless metal-geared servo and can be seen in Figure 6-37 and Figure 6-36.

6.3.6. Controls

6.3.6.1. Micro-controller

Arduinos are well known for plug-and-play capability, which is convenient for simple systems, but they are typically not as reliable for demanding systems. Arduinos can only run code, and cannot run a full operating system. The Raspberry Pi architecture allows for the use of an operating system, which open the possibility of using Robot Operating System (ROS), a comprehensive framework for robot control. The Raspberry Pi Zero is a small, lower power model, but only supports one processor core. The Raspberry Pi 2B has slightly more general-purpose inputs and outputs (GPIO), but at the same size, the 3B has much more capability than the 2B. The 3B has four processing cores, which could be used to run four separate ROS nodes of varying complexity – a redundancy advantage. The BeagleBone Black is a recent competitor to the Raspberry Pi, and has impressive specifications, but does not have the technical support of the well-used Raspberry Pi community. All the considered options support hardware interrupts and comparable power consumption.

Table 6-20: Microcontroller Model Decision Matrix

Microcontroller Model											
Design		**RP2B**		**RP3B**		**RP0**		**BeagleBone Black**		**Arduino Uno**	
Criteria	**Weight**	**Rating**	**Score**	**Rating**	**Score**	**Rating**	**Score**	**Rating**	**Score**	**Rating**	**Score**
Rover Mass	7	6	42	6	42	10	70	6	42	7	49
Volume	7	7	49	7	49	8	56	6	42	7	49
Processing Power	6	4	36	8	48	4	18	9	54	3	18
Libraries	7	8	56	8	56	8	56	7	49	3	21
Customer Service	7	9	63	9	63	9	63	3	21	8	56
Reliability	8	7	56	8	64	6	48	7	56	3	24
TOTAL		**290**		**322**		**317**		**264**		**217**	

6.3.7. Sensors

6.3.7.1. Destination Mapping

The rover needs to drive at least five feet from any section of the rocket, excluding tethers and parachutes. Since the launch vehicle will most likely have tethers much longer than five feet, the potential distance the rover must travel to achieve the proper clearance could be as much as fifty feet. Therefore, the rover must have a mechanism which can keep track of where it has already been to determine where it should go. The rover should have some system input that can map the environment and localize with it. An internal measurement unit (IMU) would be extremely helpful in preserving map accuracy. Some IMUs have multi-axes gyroscopes and/or accelerometers, but it is a negligible price and size difference between traditional IMUs and nine degrees of freedom sensors (9DOF). 9DOF sensors have a three-axis accelerometer, a three-axis gyroscope, and a three-axis magnetometer. All the IMU sensors compared were 9DOF. UART is a slow protocol compared to SPI, and most microcontrollers only support one or two UART signals, but virtually unlimited SPI connections.

Table 6-21: Inertial Measurement Unit Specifications

Inertial Measurement Unit			
Model	**Communication (All are 9DOF)**	**Nominal Current (A)**	**Power (W)**
LSM9DS1	I2C / SPI	0.002	0.006
MPU-9250	I2C / SPI	0.003	0.011
BNO005	UART / I2C	0.085	0.281

GPS accuracy is limited to roughly three feet, which is not reliable for precise navigation. However, the five-foot requirement is a minimum, and since the potential distance to be traveled is much farther, GPS can be utilized to ensure a minimum distance on the order of tens of feet from the launch vehicle. This distance can be measured without communication with the launch vehicle. The rover simply needs to keep track of its starting coordinates and navigate a minimum distance. In the table below, two other options are considered. The first is transmission from the launch vehicle. The launch vehicle could transmit a beacon signal from each separate section that the robot must avoid. That signal can be read directionally by the rover using directional delay mapping. This method would require a small radio or ultrasonic transmitted on each section of the launch vehicle, as well as at least two sensors on the rover. GPS would only require one sensor on the rover, but would consume more power than a passive receiver. As a final backup, the rover could use its object avoidance sensors and simply keep driving in one direction while avoiding obstacles.

Table 6-22: Destination Method Decision Matrix

Destination Method							
Design		**GPS**		**LV Transmitter**		**Object Avoidance**	
Requirements	**Weight**	**Value**	**Score**	**Value**	**Score**	**Value**	**Score**
Rover Mass	10	7	70	7	70	4	40
Volume	10	7	70	7	70	4	40
Number of moving parts	7	7	49	4	28	4	28
Localization Accuracy	5	3	15	7	35	5	25
Battery discharge time	3	4	12	8	24	7	21
Number of sensors needed	4	8	32	2	8	6	24
TOTAL		**248**		**235**		**178**	

GPS modules usually only operate on one frequency, and all the models evaluated operate on the same one. A lower decibel sensitivity corresponds to a more accurate signal. The more channels the module has, the faster the computation time, giving a higher refresh rate. The higher refresh rate provides more input to a potential Kalman filter, which corresponds to a higher accuracy. All the modules shown have a comparable power consumption and sensitivity, so refresh rate should be the deciding factor.

Table 6-23: GPS Model Specifications

GPS Model						
Model (All are 1575.42MHz)	**Sensitivity**	**Communication (All are UART)**	**Dim1 (in)**	**Dim2 (in)**	**Dim3 (in)**	**Power (W)**
MTK3339-gps-hat-for-raspberry-pi	-165 dBm	10Hz, 66 Ch.	2.56	2.2	0.28	0.1
MTK3339 Breakout	-165 dBm	10Hz, 66 Ch.	1	1.38	0.26	0.1
Copernicus II Breakout	-160 dBm	1Hz, 12 Ch.	1.25	1.08	0.55	0.145
Venus638 Breakout	-165 dBm	I2C, 20Hz, 65 Ch.	1.18	0.71	0.55	0.096
EM-506	-163 dBm	1Hz, 12 Ch.	1.18	1.18	0.42	0.275
LS20031		5Hz. 66 Ch.	1.18	1.18	0.2	0.135

6.3.8. Integrated Electronics

Figure 6-38 displays a high-level block diagram of the payload electrical systems. Two solar cells in series will have the potential to be connected to a charging circuit; since operation of solar panels is not a project requirement, this is a low-priority item that may not be implemented. The rover will contain between four and eight battery cells, which at the time of this document submission, will not contain individual over-drain and over-charge protection Additional logic will need to be designed which can protect against these cases, as well as configure the cells in series or parallel configurations depending on cell failure, individual charging, or series usage. This system will also receive a wake signal from the launch vehicle, which now is planned to be a physical switch that is activated upon exit from the launch vehicle.

The voltage regulator outputs three rails. Now, one will be unregulated from the full battery potential, and two will be outputted from the switching regulator. The switching regulator will supply a 5 V rail for the microcontroller, the sonar sensors, and the solar servo, and a 3.3 V rail for the GPS and 9DOF sensor.

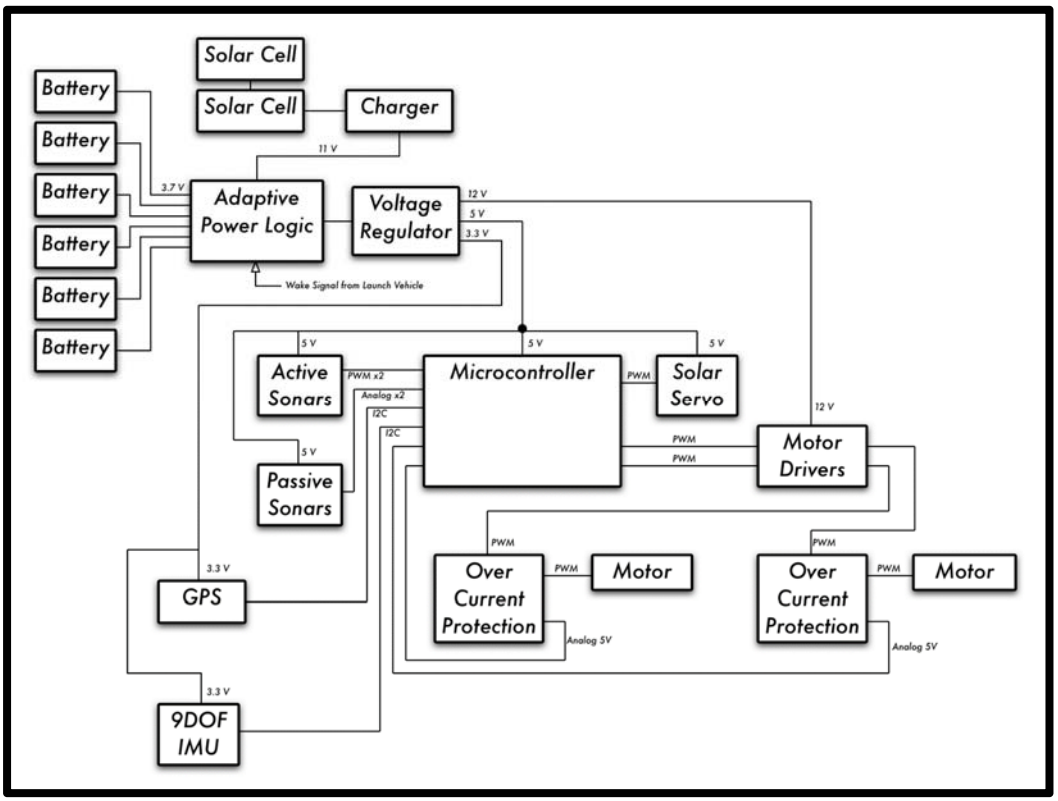

Figure 6-38: High Level Block Diagram

6.3.9. Payload Software

6.3.9.1. Software Requirements

The software running on the rover must, at a minimum, provide the rover with the intelligence necessary to:

- Move at least five feet from any part of the vehicle body.
- Avoid obstacles the rover cannot drive over or past.
- Deploy solar panels from its body.

The software on board must be sufficient to instruct the rover when and how to perform each of these tasks since they must be performed entirely autonomously after the payload has been ejected from the vehicle's body.

To accomplish these goals in software, a software framework will be leveraged to help abstract away some of the implementation details of issues such as sensor communication and object mapping, an operating system will run on the rover's microcontroller to support said framework, and code will be written in a certain language to implement the rover's intelligence. For each of these, research was done to determine the best candidate for the team's purposes based on a variety of desired properties.

6.3.9.2. Software Design Alternatives

6.3.9.2.1. Software Framework

By utilizing a software framework, team members responsible for designing the rover's software can leverage existing and tested libraries for robotics fundamentals such as object mapping, motor control, and sensor communication. To this end, three different software frameworks were considered: Robot Operating System (ROS), Mobile Robotics Programming Toolkit (MRPT), and Microsoft Robotics Developer Studio (MRDS). These three were primarily considered due to their popularity and support relative to smaller robotics software frameworks.

When considering which of these frameworks would be the best fit for developing software for the rover, several factors were considered. Firstly, the learning curve associated with utilizing the framework is a point of interest. While this aspect is not as critical as the core functionality of the framework, a framework that does not take a month to become familiar with is obviously preferable to one that takes a week. Secondly, the framework's support (or lack thereof) for various programming languages is a point of interest. Frameworks that support multiple languages are preferable; those supporting languages the team deems well-suited for rover software development even more so. In a similar vein, the framework compatibility with different operating systems and microcontrollers were also considered – a framework that does not support the best microcontroller (from a hardware perspective) would be a subpar choice, for example. Although difficult to quantify, the overall functionality of the framework was deemed to be the most important factor when selecting a software framework. Broadly, this would include the breadth of libraries available for the tasks the team is interested in and how much abstraction the framework provides to the end user. Finally, due to hardware limitations of microcontrollers small enough to fit in a 5-inch diameter vehicle, the memory overhead of the framework in question was also considered.

6.3.9.2.2. Operating System

Overall, the operating system running on the rover's microcontroller was a secondary consideration. Although necessary to run any of the three software frameworks considered, whatever operating system is selected simply needs to support the desired framework, utilize minimal hardware resources, and be relatively straightforward to use. Considering these considerations, the alternatives considered were Ubuntu, Raspbian, and Windows 10 for IoT. Ubuntu was selected because it is the distribution of Linux with the most support and is arguably the easiest to use. Additionally, because it is Debian-based, it supports both ROS and MRPT. Raspbian was considered because it is an operating system specifically designed for Raspberry Pi, the microcontroller selected for the payload, and because it is lightweight. Being Debian-based, it is also supported by both ROS and MRPT. Finally, Windows 10 for IoT was considered because it is the only operating system capable of running on a Raspberry Pi that supports MRDS.

6.3.9.2.3. Programming Language

Beyond simply being supported by the selected software framework, the language for the rover's software should have features that will make the development process easier and, at a minimum, not serve as a performance bottleneck. ROS primarily supports C++, Python, and Lisp, MRPT supports just C++, and MRDS only supports C# and a Microsoft proprietary visual programming language. Considering these restrictions, C++, Python, and C# were deemed to be the most viable alternatives since Lisp, being an archaic functional language, would be difficult to adapt to, and any visual programming language would force the microcontroller's OS to support GUI. The desired features for the programming language were determined to be:

- Team Familiarity: Using a language that the CS team members are already familiar with or least similar in syntax to one they are familiar would certainly help streamline the development process.
- Memory Management: Using a language with built-in garbage collection would help avoid a lot of runtime errors related to invalid memory access and prevent memory leaks from occurring.
- Multi-Processing: Since the microcontroller selected, a Raspberry Pi 3, uses a multi-core CPU, using a language that can leverage simultaneous use of multiple cores would help the team make the most of the microcontroller's capabilities.
- Ease of Debugging: Given the perceived complexity of the rover's software, the team anticipates a lengthy testing and debugging stage. Languages that are easier to debug are obviously preferable.
- Memory Overhead: In light of the limited memory available on the Raspberry Pi, languages that make efficient use of memory are desirable.
- Performance: Although this property is generally inversely-correlated with automatic memory management, languages that can achieve the same functionality in a smaller number of clock cycles are preferable.

6.3.9.3. Software Design Decisions

6.3.9.3.1. Software Framework

After evaluating each of the potential software frameworks in relation to their desired features, the following design matrix was created:

Table 6-24: Software Framework Decision Matrix

Software Framework Options							
Design		**ROS**		**MRPT**		**MRDS**	
Requirement	**Weight**	**Value**	**Score**	**Value**	**Score**	**Value**	**Score**
Learning Curve	3	1	3	3	9	6	18
Language Support	6	10	60	1	6	2	12
OS Support	3	7	21	7	21	1	3
Functionality	10	10	100	6	60	6	60
Memory Overhead	6	4	24	7	42	1	6
Total		**208**		**138**		**99**	

Overall, ROS is head and shoulders above both MPRT and MRDS in both language support and functionality, which are the two most important factors. ROS has full support for C++, Python, and Lisp and partial support for other languages like Java. In contrast, MRPT and MRDS only support C++ and C#, respectively. Additionally, ROS has by far the most community support of the three, with MRDS having its last update in 2012.

6.3.9.3.2. Operating System

After evaluating each of the potential operating systems for the microcontroller in relation to their desired features, the following design matrix was created:

Table 6-25: Operating System Alternatives Decision Matrix

Operating System Alternatives							
Design		**Ubuntu**		**Raspbian**		**Windows 10 IoT**	
Requirement	**Weight**	**Value**	**Score**	**Value**	**Score**	**Value**	**Score**
Ease of Use	3	8	24	5	15	10	30
Software Support	10	7	70	10	100	3	30
Memory Overhead	7	3	21	6	42	1	7
Total		**115**		**157**		**67**	

Raspbian, being an operating system created specifically for the Raspberry Pi, is unsurprisingly the winner here. It can interface most effectively with the Pi's hardware, is lightweight, and is comparable to Ubuntu in terms of ease of use (besides its lack of GUI). Windows 10 for IoT scores poorly in both software support and memory overhead since it is only compatible with MRDS and it is weighed down by the full Windows 10 GUI. Ubuntu, although being easier to use than Raspbian, scores worse in the memory overhead

department. This is because Ubuntu, even without its GUI, was designed to run on desktops, not microcontrollers.

6.3.9.3.3. Programming Language

After evaluating each of the potential programming languages in relation to their desired features, the following design matrix was created:

Table 6-26: Programming Language Decision Matrix

Programming Language Options							
Design		**C++**		**Python**		**C#**	
Requirement	**Weight**	**Value**	**Score**	**Value**	**Score**	**Value**	**Score**
Team Familiarity	3	8	24	6	18	4	12
Memory Management	6	6	36	10	60	10	60
Multi-Processing	5	8	40	1	5	8	40
Ease of Debugging	7	5	35	10	70	6	42
Readability	5	6	30	10	50	7	35
Memory Overhead	5	9	45	2	10	5	25
Performance	4	9	36	3	12	5	20
Total		**247**		**235**		**239**	

Here, C++ is the best option. It is a mature language with extensive standard libraries and the recent version like C++11 and C++17 support most of modern programming language features like reflection, constant expressions, etc. Python, although being easy to read, debug, and write, is ultimately a subpar choice because its global interpreter lock (GIL) prevents it from fully leveraging multicore CPUs. While C# does support multi-processing, it loses to C++ in performance and would force the team to utilize the vastly inferior MRDS framework and Windows 10 for IoT operating system since it is not supported by either ROS or MRP

6.4. Current Leading Overall Design

Based on the decision matrices shown in section 6.2 above, one alternative was chosen for each subsystem. This subsystem-level analysis led to the creation of an overall design based on the current leading alternatives for each subsystem. To recap the design:

- The rover will be controlled by a Raspberry Pi 3B microcontroller.
- The microcontroller will control the motors by means of the Dual MC33926 Motor Driver for Raspberry Pi, protected from excessive current draw by the INA169 Current Sensor.
- The inputs to the control system are dual MB7360 HRXL sonar sensors, a Venus638 Breakout GPS module, and a LSM9DS1 IMU.
- The drive motors are GHM-04 Spur Gear brushed motors.
- These motors will be attached to a wheel made of a closed structure of HDPE, connected to the rover with a driveshaft and many bearings.
- A single-fold stabilizer will prevent the rover from overturning.
- The various subsystems will be protected and connected by a chassis constructed from a carbon fiber and aluminum truss.
- Once the rover navigates to a suitable location using the above systems, the dual 1597-1417-ND will be unfolded by a brushless metal-geared servo.
- Four Turnigy Graphene LiPo batteries in series will provide the power the rover needs, regulated by a TPS54386PWPR switching voltage regulator.
- During flight, the entire rover will be contained in a flexible carbon-fiber wrap, retained by an Advanced Retention and Release Device.
- Black powder charges will eject the rover and housing from the launch vehicle airframe.

The mechanical systems and the larger electrical systems of this integrated design are shown in Figure 6-2a and Figure 6-2b.

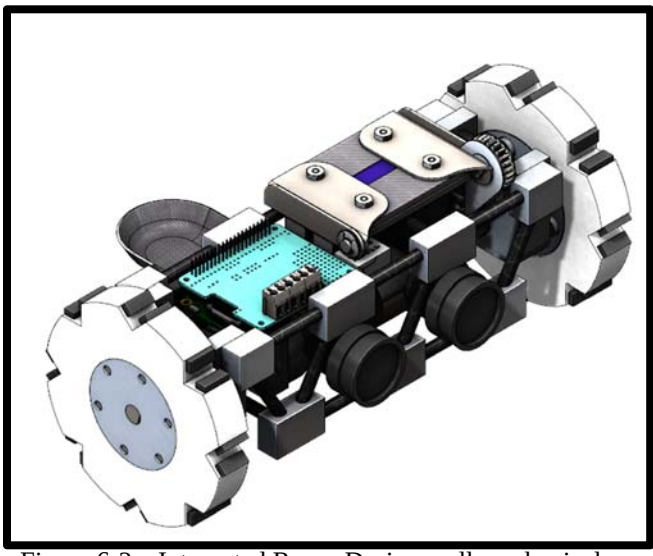

Figure 6-2a: Integrated Rover Design – all mechanical and major electrical systems

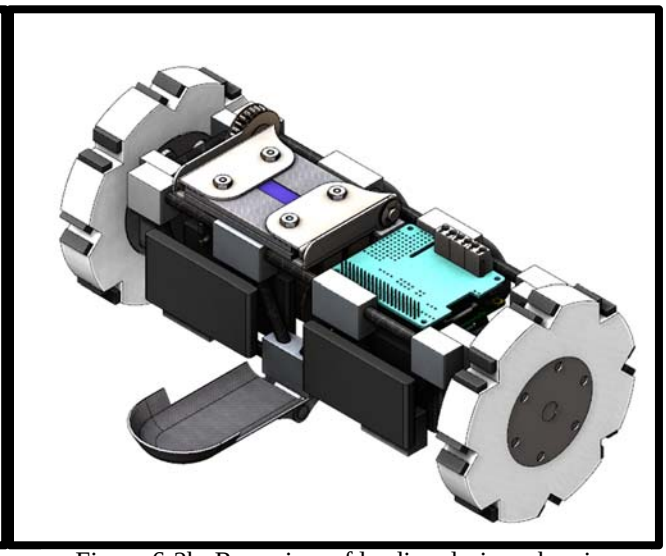

Figure 6-2b: Rear view of leading design, showing batteries

Project Plan

7.1.1. Requirements Verification

7.1.1.1. Handbook Requirements

Handbook Requirements			
Req.	**Requirement Description**	**Verification Methods**	**Verification Plan**
1.1	Students on the team will do 100% of the project, including design, construction, written reports, presentations, and flight preparation with the exception of assembling the motors and handling black powder or any variant of ejection charges, or preparing and installing electric matches (to be done by the team's mentor).	I	Students will do every part of the project besides motor assembly and installation of black powder charges.
1.2	The team will provide and maintain a project plan to include, but not limited to the following items: project milestones, budget and community support, checklists, personnel assigned, educational engagement events, and risks and mitigations.	I	Documentation regarding project milestones, budget and community support, checklists, personnel assigned, educational engagement events, and risks and mitigations have recorded in both the project proposal and the PDR report.
1.3	Foreign National (FN) team members must be identified by the Preliminary Design Review (PDR) and may or may not have access to certain activities during launch week due to security restrictions. In addition, FN's may be separated from their team during these activities.	I	A list of FN team members will be compiled and emailed to NASA representatives before the PDR.
1.4	The team must identify all team members attending launch week activities by the Critical Design Review (CDR). Team members will include:	I	A list of all team members attending launch week will be compiled and emailed to NASA representatives before the CDR.
1.5	The team will engage a minimum of 200 participants in educational, hands-on science, technology, engineering, and	D	Every educational outreach activity the team will engage in will be documented using the template provided in the USLI handbook and the entirety of this

	mathematics (STEM) activities, as defined in the Educational Engagement Activity Report, by FRR. An educational engagement activity report will be completed and submitted within two weeks after completion of an event. A sample of the educational engagement activity report can be found on page 31 of the handbook. To satisfy this requirement, all events must occur between project acceptance and the FRR due date.		documentation will be provided to NASA by the conclusion of the competition.
1.6	The team will develop and host a Web site for project documentation.	I	A functioning website for the team will be hosted online and publicly accessible.
1.7	Teams will post, and make available for download, the required deliverables to the team Web site by the due dates specified in the project timeline.	I	All competition deliverables will be made available at or before their respective deadlines on the website.
1.8	All deliverables must be in PDF format.	I	All deliverables hosted on the website will have the .pdf extension.
1.9	In every report, teams will provide a table of contents including major sections and their respective sub-sections.	I	The PDR document will have a table of contents including all sections.
1.10	In every report, the team will include the page number at the bottom of the page.	I	The PDR document will have page numbers at the bottom of each page.
1.11	The team will provide any computer equipment necessary to perform a video teleconference with the review panel. This includes, but is not limited to, a computer system, video camera, speaker telephone, and a broadband Internet connection. Cellular phones can be used for speakerphone capability only as a last resort.	I	The team will maintain all tech equipment necessary to perform teleconferences.
1.12	All teams will be required to use the launch pads provided by Student Launch's launch service provider. No custom pads will be permitted on the	I	The team will not utilize custom launch pads; those provided by Student Launch will be used.

	launch field. Launch services will have 8 ft. 1010 rails, and 8 and 12 ft. 1515 rails available for use.		
1.13	Teams must implement the Architectural and Transportation Barriers Compliance Board Electronic and Information Technology (EIT) Accessibility Standards (36 CFR Part 1194) Subpart B-Technical Standards (http://www.section508.gov): § 1194.21 Software applications and operating systems. § 1194.22 Web-based intranet and Internet information and applications.	I	Accessibility options for those with disabilities will be gradually implemented as content will be added to website.
1.14	Each team must identify a "mentor." A mentor is defined as an adult who is included as a team member, who will be supporting the team (or multiple teams) throughout the project year, and may or may not be affiliated with the school, institution, or organization. The mentor must maintain a current certification, and be in good standing, through the National Association of Rocketry (NAR) or Tripoli Rocketry Association (TRA) for the motor impulse of the launch vehicle and must have flown and successfully recovered (using electronic, staged recovery) a minimum of 2 flights in this or a higher impulse class, prior to PDR. The mentor is designated as the individual owner of the rocket for liability purposes and must travel with the team to launch week. One travel stipend will be provided per mentor regardless of the number of teams he or she supports. The stipend will only be provided if the team passes FRR and the team and mentor attends launch week in April.	I	The team has identified a single mentor, Joe Bevier, in the project proposal.

2.1	The vehicle will deliver the payload to an apogee altitude of 5,280 feet above ground level (AGL).	A	OpenRocket and MATLAB simulations will be performed to verify that the vehicle's apogee is 5,280 feet.
2.2	The vehicle will carry one commercially available, barometric altimeter for recording the official altitude used in determining the altitude award winner. Teams will receive the maximum number altitude used in determining the altitude award winner. Teams will receive the maximum number of altitude points (5,280) if the official scoring altimeter reads a value of exactly 5280 feet AGL.	I	Commercially available barometric altimeters will be used in rocket. At least one altimeter will be able to verify apogee altitude on-site
2.3	Each altimeter will be armed by a dedicated arming switch that is accessible from the exterior of the rocket airframe when the rocket is in the launch configuration on the launch pad.	I	Each altimeter on board both the subscale and full-scale vehicles will have arming switches accessible from outside the vehicle.
2.4	Each altimeter will have a dedicated power supply.	I	Each altimeter will be designed to be individually powered by a single external battery.
2.5	Each arming switch will be capable of being locked in the ON position for launch (i.e. cannot be disarmed due to flight forces).	I	Arming switch will be rotary based and capable of being locked on
2.6	The launch vehicle will be designed to be recoverable and reusable. Reusable is defined as being able to launch again on the same day without repairs or modifications.	D	The launch vehicle shall be recovered after the full-scale test and reset to a prelaunch state.
2.7	The launch vehicle will have a maximum of four (4) independent sections. An independent section is defined as a section that is either tethered to the main vehicle or is recovered separately from the main vehicle using its own parachute.	I	The vehicle will land in 3 pieces: Nose cone, payload and recovery, and aft section.
2.8	The launch vehicle will be limited to a single stage.	I	The launch will occur with only a single stage of the L1420 motor firing.

2.9	The launch vehicle will be capable of being prepared for flight at the launch site within 3 hours of the time the Federal Aviation Administration flight waiver opens.	T	During the rockets full scale testing phase, the preparation of the rocket will be timed.
2.10	The launch vehicle will be capable of remaining in launch-ready configuration at the pad for a minimum of 1 hour without losing the functionality of any critical on-board components.	I	Avionics sensors, altimeters, and the rover payload will have enough battery life to remain in launch ready state for more than one hour. This will be verified in full scale testing, and electronics bench testing.
2.11	The launch vehicle will be capable of being launched by a standard 12-volt direct current firing system. The firing system will be provided by the NASA-designated Range Services Provider.	I	The launch vehicle will be compatible with 12-Volt direct current firing system provided by NASA and the RSP.
2.12	The launch vehicle will require no external circuitry or special ground support equipment to initiate launch (other than what is provided by Range Services).	I	The rocket shall be designed in such a way that it will be compatible with the launch pad provided by Range Services.
2.13	The launch vehicle will use a commercially available solid motor propulsion system using ammonium perchlorate composite propellant (APCP) which is approved and certified by the National Association of Rocketry (NAR), Tripoli Rocketry Association (TRA), and/or the Canadian Association of Rocketry (CAR).	I	The L1420 motor has been selected for the rocket uses APCP, and has been approved by Tripoli Rocketry Association, Inc.
2.13.1	Final motor choices must be made by the Critical Design Review (CDR).	I	The team will adhere to the design and project schedule in the Gantt chart, with final motor design choices done before CDR.
2.13.2	Any motor changes after CDR must be approved by the NASA Range Safety Officer (RSO), and will only be approved if the change is for the sole purpose of increasing the safety margin.	I	In the event any motor changes are made after the CDR, a RSO will be contacted and review the proposed changes before any design choices are finalized.
2.14	Pressure vessels on the vehicle will be approved by the RSO and will meet the following criteria:	I	The launch vehicle shall contain no pressure vessels.

2.14.1	The minimum factor of safety (Burst or Ultimate pressure versus Max Expected Operating Pressure) will be 4:1 with supporting design documentation included in all milestone reviews.	I	The launch vehicle shall contain no pressure vessels.
2.14.2	Each pressure vessel will include a pressure relief valve that sees the full pressure of the valve that is capable of withstanding the maximum pressure and flow rate of the tank.	I	The launch vehicle shall contain no pressure vessels.
2.14.3	Full pedigree of the tank will be described, including the application for which the tank was designed, and the history of the tank, including the number of pressure cycles put on the tank, by whom, and when.	I	A full query shall be created of the pressure tanks previous uses, original purpose, and pressure cycles induced on the system.
2.15	The total impulse provided by a College and/or University launch vehicle will not exceed 5,120 Newton-seconds (L-class).	I	The motor shall be an L class motor with 1430 Newton-seconds total impulse.
2.16	The launch vehicle will have a minimum static stability margin of 2.0 at the point of rail exit. Rail exit is defined at the point where the forward rail button loses contact with the rail.	A	Analysis will be done with OpenRocket and MATLAB to verify minimum static stability margin of 2.0.
2.17	The launch vehicle will accelerate to a minimum velocity of 52 fps at rail exit.	A	Analysis will be done with OpenRocket and MATLAB to verify rail exit velocity.
2.18	All teams will successfully launch and recover a subscale model of their rocket prior to CDR. Subscales are not required to be high power rockets.	I	A subscale launch shall be conducted before the critical design review
2.18.1	The subscale model should resemble and perform as similarly as possible to the full-scale model, however, the full-scale will not be used as the subscale model.	I	The subscale rocket shall be an accurate representative form of the full-scale system.
2.18.2	The subscale model will carry an altimeter capable of	I	During the design phase and construction of the subscale rocket the

	reporting the model's apogee altitude.		system shall be fitted with an altimeter capable of recording apogee altitude.
2.19	All teams will successfully launch and recover their full-scale rocket prior to FRR in its final flight configuration. The rocket flown at FRR must be the same rocket to be flown on launch day. The purpose of the full-scale demonstration flight is to demonstrate the launch vehicle's stability, structural integrity, recovery systems, and the team's ability to prepare the launch vehicle for flight. A successful flight is defined as a launch in which all hardware is functioning properly (i.e. drogue chute at apogee, main chute at a lower altitude, functioning tracking devices, etc.). The following criteria must be met during the full-scale demonstration flight:	I	Full-Scale launch will occur in Brothers, OR. before 1/12/18
2.19.1	The vehicle and recovery system will have functioned as designed.	D	Upon recovery of the full-scale launch, each sub team shall confirm and verify their specific system was working as intended.
2.19.2	The payload does not have to be flown during the full-scale test flight. The following requirements still apply:	I	Payload or substitute mass will be flown
2.19.2.1	If the payload is not flown, mass simulators will be used to simulate the payload mass.	D	Prior to full scale launch the payload will be substituted for a mass that will mimic the rough shape and weight of the payload itself.
2.19.2.1.1	The mass simulators will be located in the same approximate location on the rocket as the missing payload mass.	D	In the event mass simulators of the payload is used during the full scale launch the substitute of the payload will be placed in the exact location of the payload.
2.19.3	If the payload changes the external surfaces of the rocket (such as with camera housings or external probes) or manages the total energy of the vehicle, those systems will be active during the full-scale demonstration flight.	D	In the event additional systems are added to the surface of the rocket, those systems will be included during the full-scale launch as well.

2.19.4	The full-scale motor does not have to be flown during the full-scale test flight. However, it is recommended that the full-scale motor be used to demonstrate full flight readiness and altitude verification. If the full-scale motor is not flown during the full-scale flight, it is desired that the motor simulates, as closely as possible, the predicted maximum velocity and maximum acceleration of the launch day flight.	I	In the event the full-scale motor is not used during launch, a replica of smaller scale shall be used. This replica will contain characteristics similar to the full-scale motor.
2.19.5	The vehicle must be flown in its fully ballasted configuration during the full-scale test flight. Fully ballasted refers to the same amount of ballast that will be flown during the launch day flight. Additional ballast may not be added without a re-flight of the full-scale launch vehicle.	I	In a full-scale test launch the rover payload will be tested with the launch vehicle. No extra ballast will be added only the rover, aero/recovery, and avionics sensors will be contained within the rocket payload.
2.19.6	After successfully completing the full-scale demonstration flight, the launch vehicle or any of its components will not be modified without the concurrence of the NASA Range Safety Officer (RSO).	I	The USLI team will comply with all safety instructions given by a RSO.
2.19.7	Full scale flights must be completed by the start of FRRs (March 6th, 2018). If the Student Launch office determines that a re-flight is necessary, then an extension to March 28th, 2018 will be granted. This extension is only valid for re-flights; not first-time flights.	T	A full-scale test launch of the rocket and payload will be completed before the FRR in March.
3.1	The launch vehicle will stage the deployment of its recovery devices, where a drogue parachute is deployed at apogee and a main parachute is deployed at a lower altitude	I, D	The vehicle will be equipped with a drogue parachute which is deployed at apogee, and a main parachute which is deployed at 1000 ft AGL
3.2	Successful ground ejection test of both drogue and main parachutes prior to the initial	T	A mock-up airframe with the proper weights and connections will be loaded with the calculated amount of black

	subscale and full-scale launches.		powder and ground tested to ensure the shear pins break
3.3	At landing, each independent sections of the launch vehicle will have a maximum kinetic energy of 75 ft-lbf.	A	OpenRocket simulations and a MATLAB script will calculate the final descent velocity and energy of each section
3.4	The recovery system electrical circuits will be completely independent of any payload electrical circuits.	I	Payload control circuits will be housed on the payload, with all other avionics housed in the airframe separate from the payload
3.5	All recovery electronics will be powered by commercially available batteries	I	Avionics will be designed to function with a pre-selected commercially available battery
3.6	The recovery system will contain redundant, commercially available altimeters.	I	Each set of ejection charges/altimeter will be backed up by a second, independent, and identical set of ejection charges/altimeter; each altimeter will have its own battery
3.7	Primary or secondary deployment performed without motor ejection	I	Motor cap will be used to stop ejection charge; motor will be placed against a securing and pressure sealed bulkhead
3.8	Removable shear pins used for both the main parachute compartment and the drogue parachute compartment.	I	Each separation point will have a coupling tube which is secured by Nylon shear pins
3.9	Recovery area limited to a 2500 ft. radius from the launch pads.	A	OpenRocket and MATLAB simulations performed to calculate the expected drift distance whenever rocket parameters change significantly
3.10	An electronic tracking device will be installed in the launch vehicle and will transmit the position of the tethered vehicle or any independent section to a ground receiver.	I, T	A telemetry unit will be placed in the rocket to communicate with a ground station; the system will be tested prior to launch
3.10.1	Any rocket section, or payload component, which lands untethered to the launch vehicle, will also carry an active electronic tracking device.	I	Separate telemetry units will be placed in each part of the rocket which lands untethered
3.10.2	The electronic tracking device will be fully functional during the official flight on launch day.	I, D	Avionics will be visually inspected before flight; communication verification between avionics and ground station will be performed prior to launch
3.11	The recovery system electronics will not be adversely affected by any other on-board electronic devices during flight (from launch until landing)	I, T	Recovery controllers will be EMI shielded and all wires will be shielded; excitation testing will be performed on the final recovery system without black powder

3.11.1	The recovery system altimeters will be physically located in a separate compartment within the vehicle from any other radio frequency transmitting device and/or magnetic wave producing device.	I	Recovery and telemetry units will be placed in different sections of the rocket with EMI shielding over all recovery components
3.11.2	The recovery system electronics will be shielded from all onboard transmitting devices, to avoid inadvertent excitation of the recovery system electronics.	I	Antennas will be stored as far away from recovery controllers as possible; EMI shielding on recovery controllers
3.11.3	The recovery system electronics will be shielded from all onboard devices which may generate magnetic waves (such as generators, solenoid valves, and Tesla coils) to avoid inadvertent excitation of the recovery system.	I	The use of magnetic component will be minimized; all recovery wires will use twisted pairs
3.11.4	The recovery system electronics will be shielded from any other onboard devices which may adversely affect the proper operation of the recovery system electronics.	I	Recovery electronics will be sealed off from ejection gasses with a bulkhead, wire connections will pass through bulkheads with a sealed connector
4.5.1	Teams will design a custom rover that will deploy from the internal structure of the launch vehicle.	T, D	The designed rover will be successfully ejected from the rocket housing during the full-scale test launch and on official launch day. A custom designed ejection method will be created to accomplish this task.
4.5.2	At landing, the team will remotely activate a trigger to deploy the rover from the rocket.	T, D	The rover will be ejected from the rocket casing using black powder charges. To conserve battery life, the rover systems will be turned on with a physical spring-loaded relay once it's been ejected successfully.
4.5.3	After deployment, the rover will autonomously move at least 5 ft. (in any direction) from the launch vehicle.	T, D	The rover will use GPS, sonar, IMU 9DOF, and passive detection to avoid obstacles and navigate to a desired location. The rover frame will be durable and will have sufficient ground clearance. The rover will also use treaded wheels and a rear stabilizer to travel 5 feet in rough terrain.
4.5.4	Once the rover has reached its final destination, it will deploy a set of foldable solar cell panels.	T, D	A custom designed, durable enclosure for the solar panels will be deployed using a servo motor on board the rover.

5.1	Each team will use a launch and safety checklist. The final checklists will be included in the FRR report and used during the Launch Readiness Review (LRR) and any launch day operations.	I	Each sub team shall create a checklist of their required items. These checklists shall be compiled and verified by the Safety Officer and prepared for the LRR. All team members shall verify checklists and comply with them at launch.
5.2	Each team must identify a student safety officer who will be responsible for all items in section 5.3.	I	The team Safety Officer is Timothy Lewis.
5.3	The role and responsibilities of each safety officer will include, but not limited to:	I	Safety Officer will manage all roles required of them
5.3.1	Monitor team activities with an emphasis on Safety during:	I	Safety Officer will be present during all team activities which pose a safety risk
5.3.1.1	Design of vehicle and payload	I	The Safety Officer shall be at all internal design reviews to raise issues of safety that could affect chosen designs.
5.3.1.2	Construction of vehicle and payload	I	Before construction begins the Safety Officer shall brief all involved team members on potential hazards and mitigation and shall stand bay to provide assistance in fulfilling safety protocols.
5.3.1.3	Assembly of vehicle and payload	I	Before assembly begins the Safety Officer shall brief all involved team members on potential hazards and mitigation and shall stand bay to provide assistance in fulfilling safety protocols.
5.3.1.4	Ground testing of vehicle and payload	I	Before ground testing begins the Safety Officer shall brief all involved team members on potential hazards and mitigation and shall stand bay to provide assistance in fulfilling safety protocols.
5.3.1.5	Sub-scale launch test(s)	I	Before sub-scale launch the Safety Officer shall complete a checklist for launch with the help of the members taking part if the launch. The Safety Officer shall then brief said members on the rules and regulation of the launch site and each member's role during the launch. A final check off for all components shall then be carried out by the Safety Officer.
5.3.1.6	Full-scale launch test(s)	I	Before full-scale launch the Safety Officer shall complete a checklist for launch with the help of the members taking part if the launch. The Safety Officer shall then brief said members on the rules and regulation of the launch site

			and each member's role during the launch. A final check off for all components shall then be carried out by the Safety Officer.
5.3.1.7	Launch day	I	Before Launch Day the Safety Officer shall complete a checklist for launch with the help of the members taking part if the launch. The Safety Officer shall then brief said members on the rules and regulation of the launch site and each member's role during the launch. A final check off for all components shall then be carried out by the Safety Officer.
5.3.1.8	Recovery activities	I	The Safety Officer shall communicate with the appropriate range officers to determine the appropriate time to collect the launch vehicle and prepare team members for possible hazards of doing so.
5.3.1.9	Educational Engagement Activities	I	For all Education Activities that require a safety component (model launches, rocket demos) the Safety Officer shall prepare a briefing and safety analysis. The team shall then coordinate with the appropriate educators such that they understand the possible risks involved. All team members who perform the outreach activity shall receive the briefing and if the Safety Officer is unable to attend another member of the outreach group shall be deputized to function as the Safety Officer for that event, with the full understanding that their actions as a temporary Safety Officer must follow all guidelines as such.
5.3.2	Implement procedures developed by the team for construction, assembly, launch, and recovery activities	I	The Safety Officer shall be the team member during activities carrying all procedures and checklists to ensure that all activities follow the predetermined order and meet the preset requirements.
5.3.3	Manage and maintain current revisions of the team's hazard analyses, failure modes analyses, procedures, and MSDS/chemical inventory data	I	The Safety Officer shall collect all required forms and analyses and make them available both in hard copy and online for all team members should they be needed. New versions shall replace older editions.
5.3.4	Assist in the writing and development of the team's	I	The Safety Officer shall oversee collecting, compiling and reviewing all

	hazard analyses, failure modes analyses, and procedures.		hazard analyses, failure mode analyses and procedures.
5.4	During test flights, teams will abide by the rules and guidance of the local rocketry club's RSO. The allowance of certain vehicle configurations and/or payloads at the NASA Student Launch Initiative does not give explicit or implicit authority for teams to fly those certain vehicle configurations and/or payloads at other club launches. Teams should communicate their intentions to the local club's President or Prefect and RSO before attending any NAR or TRA launch.	I	The team shall communicate with the RSO for all test launches. Any concerns of said RSO shall either be addressed by the launch or the launch rescheduled to allow for more time to address them. The team understands that the decisions of the RSO are final, and the RSO has the power to postpone or cancel any launch activities.
5.5	Teams will abide by all rules set forth by the FAA.	I	The team has knowledge of all appropriate FAA regulations and shall abide by them.

7.1.1.2. Team Generated Requirements

Team Generated Requirements			
Req.	**Requirement Description**	**Verification Method**	**Verification Plan**
1.1	All documents shall be completed and submitted on time	I	Documents will be submitted to mentors for proofreading no less than 7 days prior to due date; documents will be submitted no less than 1 day prior to due date
1.2	Team members shall host education outreach events reaching over 300 K-12 students		Team will visit local schools through project to teach lessons related to STEM and aerospace topics and engage students. Team will work with University administrators to plan and host an engineering and aerospace themed day for students
1.3	The team will develop a mission patch	I	Team members will vote on submitted design; patch will be embroidered on team clothing and used for branding/sponsorship purposes
1.4	The team shall represent all sponsors with appropriate logos and stickers	I	Sponsorship officer will ensure that all sponsors are adequately represented on the final rocket assembly and on the team website
1.5	At least 50% of team members will have HPR Level 1	I	Certification rockets have been purchased for all team members. Each member will assemble their own rocket, and the team will travel to site and

	Certification prior to competition launch		launch together sometime between 11/3/17 and 12/8/17
1.6	Team members will have a common uniform for professional appearance, to identify OSRT at competition, and for team spirit	I	A standard team Polo shirt and jacket with team name and mission patch will be ordered for each team member prior to CDR
2.1	All components will be able to withstand the heat and pressure from ejection charges	I, T	Bulkheads facing ejection charges will be covered with a thermally resistant material; temperature and pressure reading will be taken during ejection ground testing
2.2	Rocket will not be over stable or susceptible to weather-cocking	I	Stability will be limited to maximum of 3.5 at rail exit
2.3	Launch vehicle will be able to be stowed in a 4'x4'x2' container for shipping	I, D	Overall length of sections will be tracked; final assembly will be placed in shipping container to ensure adequate room
3.1	Payload will have a clear exit out of the airframe after landing	I	After separation, no bulkheads or airframe components will be between the open end of the fore section and the payload
3.2	Payload ejection will not be obstructed by any of the recovery system after landing	D	Sub-scale and pre-competition full-scale launches will demonstrate the ability of the recovery system to provide an adequate landing for the payload
3.3	Peak recovery loads will remain below a maximum magnitude of 15 G's	D	A data logger will be included to record flight trajectory and in-flight forces will verify the actual peak recovery loads
3.4	The avionics system will have enough transmission power to communicate with the ground station during the entirety of the flight	T, D	Telemetry system will be sufficiently ground tested to ensure proper performance
3.5	Avionics system will be able to track position of the rocket without losing communication for a period of greater than five seconds	T, D	Extensive ground testing will be performed on the telemetry system; telemetry system will be on-board the sub-scale and full-scale launches
3.6	Avionics subsystem circuit will be reusable in less than an hour following a successful launch	T	Avionics system will be tested for full functionality following a successful first launch to deem that it is capable of relaunch within an hour
3.7	Avionics electronics will have sufficient battery life and will be fault resistant	I, T	Avionics power systems will have failsafe redundant power supplies; system will be tested under various fault conditions
4.1	The payload will have on board sensors to avoid collisions with objects.	D	Upon ejection, the payload will successfully navigate 5 feet in any direction away from the rocket using multiple sensors to avoid objects.
4.2	The sonar sensors on board the rover will output an accurate range reading to objects within its detection range.	A, T	A test algorithm/program will be created to view the raw range output data from the sonar sensors.

4.3	The GPS sensor on board the rover will output valid coordinate positions to the microcontroller.	A, T	A test algorithm/program will be created to view the raw coordinate output data from the GPS sensor.
4.4	The IMU 9DOF will provide the rover with valid gyroscope, compass, and accelerometer readings.	A, T	A test algorithm/program will be created to view the raw IMU output data from the IMU 9DOF sensor.
4.5	The rover will receive high frequency signals from transmitters on each of the rocket casing pieces to determine where the rocket casing pieces are located relative to itself.	A, T	A test algorithm/program will be created to view the received raw rocket transmitter output data.
4.6	The payload will prevent damage to motors when stalling conditions are encountered through overcurrent protection.	T, D	Rover motors will have its movement restricted during runtime to simulate stall conditions. Upon reaching stall currents, overcurrent protection will cut off power to the motors within 30 seconds.
4.7	The rover frame must have sufficient vertical clearance to avoid low level debris.	I, D	The rover frame will be high enough above ground level to successfully navigate over low level debris such as tall grass and small rocks.
4.8	The rover wheels must navigate through rough terrain.	I, D	The rover wheels will have traction divots on the circumference to navigate over rough terrain areas.
4.9	The rover will have a tail fin for stabilization.	I, D	A rear stabilizer will be deployed to keep the rover stabilized as it navigates through terrain.
4.10	The rover's batteries will provide enough power to supply all its electrical systems for at least 25 minutes	T	The batteries will be drained with a load equivalent to all the electrical components on the rover and timed for 25 minutes.
4.11	The batteries will have an automatic safety cutoff switch that will disconnect the batteries from the load once it has reached its critically low voltage level.	I, T	The batteries will be drained to their critically low voltage level to see if the batteries are automatically disconnected form the load.
4.12	The voltage regulator on the rover's power supply will provide two output voltages at 5V and 3.3V while accepting a range of input voltages.	T	The voltage regulator will be supplied by a variable power supply and varied to the max and min values the batteries will provide. Then the output voltages will be measured to make sure they are still at 5V and 3.3V at each input voltage.
5.1	All team members that use the manufacturing and machining facilities at OSU need to have the appropriate certification.	I	All team members who use the OSU MPRL, the woodshop or the composites manufacturing lab shall have the appropriate certification from the administrator of said lab before use.
5.2	Additional team members to assist the Safety Officer in explicitly promoting team	I	Each sub-team will identify a Safety Liaison to assist the Team Safety Officer

	safety and the preparation of safety documents.		
5.3	The Mentor and Educational Advisor will have a final say in the safety of all activities and designs.	I	If either the Mentor or Advisor have any safety concerns with an activity or design, said issue shall be discussed and changed to mitigate the safety concerns raised.
5.4	Team will secure all hazardous material so that only certified personal can access them	I	Hazardous materials will be kept in a separate area of the team workspace, with a lock; Only team leaders, Safety Officer, and team mentors will have access
5.5	Team will follow all safety rules and guidelines set by the NAR, TRA, and OSU.	I	Safety Officer will be familiar with both NRA/TRA safety regulations and OSU safety codes, will ensure the team abides by all rules

7.1.2. Budgeting and Timeline

7.1.2.1. Line Item Budget

Listed below is the expected budget for the project.

Parts Budget										
ID	**Subteam**	**Component**	**Description**	**QTY**	**Unit Cost**	**Total Amount**	**Supplier**	**SKU**	**Category**
1	OSRT	Apparrel	USLI T-shirt	24	$ 14.75	$ 354.00	4imprint	-	Misc.
2	OSRT	Apparrel	USLI Polo	24	$ 31.25	$ 750.00	4imprint	-	Misc.
3	OSRT	Apparrel	AIAA Polo	24	Donated	-	AIAA	-	Misc.
4	OSRT	Apparrel	AIAA Jacket	24	Donated	-	AIAA	-	Misc.
5	OSRT	Fabrication	Composites: Prepreg Carbon Fiber Woven Sheet, 50"x5yd	1	$ 654.45	$ 654.45	Fibre Glast	3111-C	Material
6	OSRT	Fabrication	Composites: Bagging Film, 5 yd. roll	1	$ 29.95	$ 29.95	Fibre Glast	1688-C	Tools
7	OSRT	Fabrication	Composites: Peel Ply, 5 yd. roll	1	$ 59.95	$ 59.95	Fibre Glast	582-C	Tools
8	OSRT	Fabrication	Composites: High Temperature Release Film, 5 yd. roll	1	$ 119.95	$ 119.95	Fibre Glast	1782-C	Tools
9	OSRT	Fabrication	Composites: Bleeder and Breather, 5 yd. roll	1	$ 24.95	$ 24.95	Fibre Glast	579-C	Tools
10	OSRT	Fabrication	Composites: Flash Tape 1 in	3	$ 29.95	$ 89.85	Fibre Glast	584-A	Tools
11	OSRT	Fabrication	Composites: Vacuum Valve	2	$ 39.95	$ 79.90	Fibre Glast	910-A	Tools
12	OSRT	Fabrication	Composites: Vacuum Gauge	1	$ 39.95	$ 39.95	Fibre Glast	2218-A	Tools
13	OSRT	Fabrication	Composites: 1/16 HP Vacuum Pump	1	$ 549.95	$ 549.95	Fibre Glast	888-A	Tools
14	OSRT	Fabrication	Composites: 3k Carbon Fiber Plain Weave 50in x 5yd	1	$ 249.95	$ 249.95	Fibre Glast	530-C	Material
15	OSRT	Fabrication	Composites: System 2000 Epoxy Resin, Gallon	1	$ 104.95	$ 104.95	Fibre Glast	2000-B	Material
16	OSRT	Fabrication	Composites: Nomex Honey Comb Half Sheet	1	$ 134.95	$ 134.95	Fibre Glast	1562-A	Material
17	OSRT	HPR Cert	4" rocket, G class motors	8	$ 45.00	$ 360.00	-	-	Misc.
18	Aero/Recovery	Separation	Black Powder (FFFF)	1	$ 18.35	$ 18.35	Buffalo Arms Co.	GOEX4F	Material
19	Aero/Recovery	Separation	Zip-Ties 4" (100 ct)	1	$ 7.01	$ 7.01	McMaster-Carr	7130K15	Hardware
20	Aero/Recovery	Separation	Latex Tube (3/8") 10 ft	2	$ 20.41	$ 40.82	Amazon	-	Material
21	Aero/Recovery	Separation	Firewire Initiator 24" Leads (80 ct.)	1	$ 54.40	$ 54.40	Firewire	-	Component
22	Aero/Recovery	Parachute	Iris Ultra Std. Parachute 96"	2	$ 324.00	$ 648.00	Fruity Chutes	IFC-96	Component
23	Aero/Recovery	Parachutes	Elliptical Std. Parachute 12"	2	$ 47.00	$ 94.00	Fruity Chutes	CFC-12	Component
24	Aero/Recovery	Parachutes	Nomex Blanket 18"	2	$ 24.00	$ 48.00	Fruity Chutes	NB-18	Component

ID	Subteam	Component	Description	QTY	Unit Cost	Total Amount	Supplier	SKU	Category
25	Aero/Recovery	Parachutes	Nylon Parachute Cord 100 ft	1	$ 9.34	$ 9.34	Amazon	-	Material
26	Aero/Recovery	Parachutes	5"x13" Custom Deployment Bag	2	$ 82.00	$ 164.00	Fruity Chutes	-	Component
27	Aero/Recovery	Parachutes	4.5"x7" Deployment Bag	2	$ 76.00	$ 152.00	Fruity Chutes	-	Component
28	Aero/Recovery	Parachutes	Nylon 1/2" Shock Cord	3	$ 21.00	$ 63.00	Fruity Chutes	SCN-500	Component
29	Aero/Recovery	Parachutes	3000lb Swivel	6	$ 9.00	$ 54.00	Fruity Chutes	SWIV-1000	Component
30	Aero/Recovery	Parachutes	Nylon 1/2" Y Harness	3	$ 18.00	$ 54.00	Fruity Chutes	HN-Y	Component
31	Aero/Recovery	Parachutes	Nomex 1/2" Braided Shield 25'	1	$ 32.85	$ 32.85	Cable Organizer	MSNX050	Material
32	Aero/Recovery	Avionics	Active 28dB GPS Antenna	3	$ 12.95	$ 38.85	Adafruit	960	Electronics
33	Aero/Recovery	Avionics	UBlox MAX-M8Q-0	3	$ 30.00	$ 90.00	Digikey	MAX-M8Q-0	Electronics
34	Aero/Recovery	Avionics	Arduino Uno Rev3	2	$ 24.95	$ 49.90	SparkFun	DEV-1102	Electronics
35	Aero/Recovery	Avionics	SparkFun FT231X Breakout	1	$ 12.95	$ 12.95	SparkFun	BOB-13263	Electronics
36	Aero/Recovery	Avionics	Xbee SX RF Module	4	$ 99.00	$ 396.00	Mouser	XBP9X-DMUX-001	Electronics
37	Aero/Recovery	Avionics	Xbee® SX RF Module Development Kit	1	$ 59.00	$ 59.00	Mouser	XKB2-AT-WWC	Electronics
38	Aero/Recovery	Avionics	MissleWorks RRC3 Altimeter	5	$ 71.95	$ 359.75	Apogee Components	09095	Electronics
39	Aero/Recovery	Avionics	Jolly Logic Chute Release	4	$ 130.95	$ 523.80	Apogee Components	09157	Electronics
40	Aero/Recovery	Avionics	824-960, 13dBi, Terrawave Yagi Base Antenna	1	$ 65.00	$ 65.00	Scanner Master	T09130Y11206	Electronics
41	Aero/Recovery	Avionics	11V to 3.3 and 5V Vreg	5	$ 5.00	$ 25.00	Digikey	-	Electronics
42	Aero/Recovery	Avionics	Monopole 900MHz Whip Antenna	3	$ 30.00	$ 90.00	Mouser	-	Electronics
43	Aero/Recovery	Avionics	3.3V LDO	5	$ 5.00	$ 25.00	Digikey	-	Electronics
44	Aero/Recovery	Avionics	3.7V lithium prismatic batteries	10	$ 20.00	$ 200.00	Adafruit/Digikey	-	Electronics
45	Aero/Recovery	Avionics	Custom PCB 4 Layer 10cmx5cm (10 ct.)	1	$ 92.90	$ 92.90	DFRobot	-	Electronics
46	Aero/Recovery	Avionics	BeagleBone Black	2	$ 54.99	$ 109.98	Arrow	-	Electronics
47	Aero/Recovery	Avionics	Adafruit 10-DOF IMU Breakout	2	$ 29.95	$ 59.90	Adafruit/Amazon	1604	Electronics
48	Aero/Recovery	Avionics	SparkFun Pressure Sensor Breakout	2	$ 59.95	$ 119.90	SparkFun	SEN-12909	Electronics

ID	Subteam	Component	Description	QTY	Unit Cost	Total Amount	Supplier	SKU	Category
49	Aero/Recovery	Avionics	SparkFun Barometric Sensor Breakout	2	$ 14.95	$ 29.90	SparkFun	SEN-11048	Electronics
50	Aero/Recovery	Avionics	Adafruit High-G Accelerometer Breakout	2	$ 24.95	$ 49.90	Adafruit	1413	Electronics
51	Aero/Recovery	Avionics	1/8" Heat Shrink Tubing 4'	25	$ 0.95	$ 23.75	Mouser	602-221018-4BK	Material
52	Aero/Recovery	Avionics	1/4" Heat Shrink Tubing 4'	15	$ 1.58	$ 23.70	Mouser	602-221014-4BK	Material
53	Aero/Recovery	Avionics	3 Pin CPC Male	6	$ 5.00	$ 30.00	Mouser	571-206207-1	Material
54	Aero/Recovery	Avionics	3 Pin CPC Female	6	$ 8.59	$ 51.54	Mouser	571-183082-1	Material
55	Aero/Recovery	Avionics	11 Pin CPC Kit	2	$ 12.09	$ 24.18	Mouser	571-737094-1	Material
56	Aero/Recovery	Avionics	22 AWG UL 1007 100'	3	$ 30.72	$ 92.16	Mouser	602-3051-100-02	Material
57	Aero/Recovery	Avionics	RLC components, solder, RF connectors for custom board assembly	1	$ 400.00	$ 400.00	Digikey	-	Electronics
58	Aero/Recovery	Aero	5” 4:1 Ogive nosecone	2	$ 119.99	$ 239.98	Madcow Rocketry	-	Component
59	Structures	Body Tube	5" Body Tube	1	Donated	-	ICE	-	Body
60	Structures	Body Tube	Acme Confromal® Launch Guide - 6"	1	$ 12.35	$ 12.35	Giant Leap Rocketry	-	Component
61	Structures	Coupler	2-56 Nylon Shear Screws (100 ct)	1	$ 5.55	$ 5.55	McMaster-Carr	95133A277	Hardware
62	Structures	Bulkhead / Fin	Yellow Sealant Tape - 25 ft	5	$ 9.94	$ 49.70	Fiber Glast	580-A	Material
63	Structures	Eyebolt	Galvanized Steel Eyebolt w/ Shoulder 1/2" -13	6	$ 7.20	$ 43.20	McMaster-Carr	3018T44	Hardware
64	Structures	Washer	Stainless Steel 1/2 in Washer 25ct	1	$ 8.82	$ 8.82	McMaster-Carr	90107A033	Hardware
65	Structures	Threaded Rod	Threaded Steel Rod 1/2in-13 4ft	1	$ 14.67	$ 14.67	McMaster-Carr	90322A157	Hardware
66	Propulsion	Retainer	6061 Al 3.75" OD x 6"	1	$ 48.82	$ 48.82	McMaster-Carr	8974K96	Material

ID	Subteam	Component	Description	QTY	Unit Cost	Total Amount	Supplier	SKU	Category
67	Propulsion	Motor case	75 mm Motor Case	1	$ 417.30	$ 417.30	Aerotech	RMS-75/5120	Component
68	Propulsion	Reload Kit	L1390G-P	3	$ 199.99	$ 599.97	Aerotech	ARO-12139P	Component
69	Propulsion	Aft Closure	75mm Aft Closure	2	$ 80.25	$ 160.50	Aerotech	60169	Component
70	Propulsion	Forward Closure	75mm Forward Closure	2	$ 101.65	$ 203.30	Aerotech	60160	Component
71	Payload	Chassis	Pololu Universal Aluminum 6 mm Mounting Hub	3	$ 7.95	$ 23.85	Robotshop	RB-Pol-136	Hardware
72	Payload	Chassis	Aluminum Bar Stock 2"x3"x12"	1	$ 91.88	$ 91.88	Online Metals	13339	Material
73	Payload	Chassis	Aluminum Angle .25"x.25"x8'	6	$ 2.82	$ 16.92	McMaster-Carr	8982K3	Material
74	Payload	Chassis	Aluminum Sheet .19x4x24	6	$ 26.96	$ 161.76	McMaster-Carr	89015K273	Material
75	Payload	Chassis	Ball Bearing	6	$ 6.56	$ 39.36	McMaster-Carr	60355K701	Material
76	Payload	Chassis	Al Sheet .05x6x24	3	$ 16.22	$ 48.66	McMaster-Carr	89015K175	Material
77	Payload	Chassis	CF sheet	1	$ 68.75	$ 68.75	McMaster-Carr	8181K32	Material
78	Payload	Rover	HDPE Sheet 1" x 6" x 12"	3	$ 19.06	$ 57.18	McMaster-Carr	8619K851	Material
79	Payload	Rover	Carbon Fiber 3/8" OD x 60" length	1	$ 41.99	$ 41.99	Rock West Composites	45546	Material
80	Payload	Rover	6061-T6 Aluminum Rod 4.5" diameter, 1/2' long	3	$ 57.72	$ 173.16	McMaster-Carr	8974K62	Material
81	Payload	Rover	4-40 SHCS, 7/8" length	3	$ 10.30	$ 30.90	McMaster-Carr	91251A114	Hardware
82	Payload	Rover	4-40 Set Screw, 1/8" length	3	$ 13.88	$ 41.64	McMaster-Carr	94105A104	Hardware
83	Payload	Rover	4-40 Set Screw, 3/8" length	3	$ 9.16	$ 27.48	McMaster-Carr	94355A141	Hardware
84	Payload	Rover	Polyurethane sheet, 1/8" thick, 1" wide, 48" long, 60A durometer	2	$ 21.73	$ 43.46	McMaster-Carr	8997K51	Hardware
85	Payload	Power	Samsung 30Q INR 18650	18	$ 10.00	$ 180.00	Battery Junction	SAMSUNG-30Q-18650-3000-FLAT	Electronics
86	Payload	Power	Solar Cell 500mW	6	$ 1.99	$ 11.94	Digikey	1597-1417-ND	Electronics
87	Payload	Controls	GHM-04 Spur Gear Head Motor	6	$ 21.95	$ 131.70	Robotshop	RB-Hsi-04	Electronics

ID	Subteam	Component	Description	QTY	Unit Cost	Total Amount	Supplier	SKU	Category
88	Payload	Controls	Pololu Dual MC33926 Motor Driver for Raspberry Pi (Partial Kit)	3	$ 29.95	$ 89.85	Pololu Robotics & Electronics	-	Electronics
89	Payload	Controls	Raspberry Pi 3	3	$ 35.00	$ 105.00	Adafruit	3055	Electronics
90	Payload	Controls	BLS-671svi Brushless Servo	2	$ 159.99	$ 319.98	Servo City	FUTM0186	Electronics
91	Payload	Sensors	Vishay BC Components Load Resistor	10	$ 0.24	$ 2.01	Digikey	BC3245CT-ND	Electronics
92	Payload	Sensors	Ohmite 14AFR047E Shunt Resistor	10	$ 2.02	$ 17.88	Digikey	14AFR047E-ND	Electronics
93	Payload	Sensors	INA169 Current Sensor	8	$ 8.95	$ 71.60	Robot Shop	RB-Spa-901	Electronics
94	Payload	Sensors	iNEMO inertial module	3	$ 6.33	$ 18.99	ST	LSM9DS1	Electronics
95	Payload	Sensors	9DoF IMU Breakout	2	$ 24.95	$ 49.90	SparkFun	SEN-13284	Electronics
96	Payload	Sensors	Venus638 GPS	3	$ 39.95	$ 119.85	SparkFun	GPS-10919	Electronics
97	Payload	Sensors	MB7360 HRXL-MaxSonar-WR (Compact IP67 Casing)	9	$ 109.95	$ 989.55	MaxBotix	MB7360-200	Electronics
98	Payload	Sensors	GPS Antenna	2	$ 119.95	$ 239.90	The GPS Store	FUXGPA017	Electronics
99	Payload	Power	Tenergy 31023 Li-Ion 18650 14.8V	6	$ 75.95	$ 455.70	Battery Junction	31023	Electronics
100	Payload	Power	Tenergy TB6 Balancing Charger	1	$ 99.99	$ 99.99	Battery Junction	90203	Electronics
101	Payload	Power	TPS54386PWPR	2	$ 1.15	$ 2.30	Digikey	296-23109-2-ND	Electronics
102	Payload	Connection	Solder 1lb	2	$ 26.95	$ 53.90	Jameco	141786	Tools
103	Payload	Connection	Power wire 100ft Black and Red	2	$ 7.95	$ 15.90	Jameco	36792, 36856	Tools
104	Payload	Connection	Shielded wire, 4 strand 24 feet	3	$ 9.95	$ 29.85	Jameco	644383	Tools
105	Payload	Connection	Shielding Tape	4	$ 20.85	$ 83.40	Jameco	1643551	Tools
106	Payload	Ejection	Black Powder (FFFF)	1	$ 18.35	$ 18.35	Buffalo Arms Co.	GOEX4F	Material
107	Payload	Ejection	Zip-Ties 4" (100 ct)	1	$ 7.01	$ 7.01	McMaster-Carr	7130K15	Hardware
108	Payload	Ejection	Large capacity ejection canister	25	$ 2.50	$ 62.50	Apogee Components	-	Hardware
109	Payload	Ejection	Terminal Block	3	$ 3.41	$ 10.23	Apogee Components	-	Hardware
110	Payload	Ejection	HDPE Rod	1	$ 46.71	$ 46.71	McMaster-Carr	8624K681	Hardware
111	Payload	Ejection	6061 Aluminum Rod	1	$ 37.68	$ 37.68	McMaster-Carr	1610T48	Hardware

ID	Subteam	Component	Description	QTY	Unit Cost	Total Amount	Supplier	SKU	Category
112	Payload	Ejection	Aluminum Locknut	4	$ 4.32	$ 17.28	McMaster-Carr	95856A245	Hardware
113	Payload	Ejection	Aluminum Threaded Rod	1	$ 7.38	$ 7.38	McMaster-Carr	93225A873	Hardware
114	Payload	Ejection	Washer	1	$ 8.96	$ 8.96	McMaster-Carr	92916A365	Hardware
115	Payload	Ejection	Threadlocker Fluid	1	$ 5.59	$ 5.59	Amazon	-	Hardware
116	Payload	Ejection	ARRD	2	$ 119.00	$ 238.00	Aerocon Systems	-	Hardware
117	Payload	Ejection	Eyebolt	2	$ 14.21	$ 28.42	McMaster-Carr	33045T33	Hardware
118	Payload	Ejection	Flexible Carbon Fiber Sheet	1	$ 94.23	$ 94.23	Carbon Fiber Shop	-	Hardware
119	Payload	Ejection	Soft Foam	1	$ 10.33	$ 10.33	Amazon	-	Hardware
120	Payload	Ejection	Hard Foam	1	$ 8.75	$ 8.75	Amazon	-	Hardware
121	Payload	Ejection	Quest Recovery Wadding	1	$ 7.48	$ 7.48	Apogee Components	-	Hardware
122	Payload	Ejection	Fiberglass Panel	1	$ 68.71	$ 68.71	McMaster-Carr	-	Hardware
123	Payload	Ejection	1/4" Nuts and Bolts (50 ct.)	2	$ 11.33	$ 22.66	McMaster-Carr	-	Hardware
124	Payload	Ejection	1/2" Nuts and Bolts (5 ct.)	3	$ 5.50	$ 16.50	McMaster-Carr	-	Hardware
125	Payload	Ejection	Plywood Panels	2	$ 48.89	$ 97.78	McMaster-Carr	-	Hardware
126	Payload	Ejection	3/8" Nuts and Bolts (25 ct.)	2	$ 8.29	$ 16.58	McMaster-Carr	-	Hardware
127	Payload	Ejection	Block Aluminum (6061-T6)	1	$ 12.00	$ 12.00	McMaster-Carr	-	Hardware
128	Payload	Ejection	Sheet Aluminum	1	$ 107.57	$ 107.57	McMaster-Carr	-	Hardware
129	Payload	Ejection	1/2"x3' Steel Rod	1	$ 45.22	$ 45.22	McMaster-Carr	-	Hardware
130	Payload	Ejection	1/8"x3' Steel Rod	1	$ 19.17	$ 19.17	McMaster-Carr	-	Hardware
131	Payload	Ejection	Block Wood	1	$ 31.38	$ 31.38	McMaster-Carr	-	Hardware
132	Payload	Ejection	Hinge	2	$ 5.53	$ 11.06	McMaster-Carr	-	Hardware
133	Payload	Ejection	1"x6' Hollow Aluminum Tubes	1	$ 27.30	$ 27.30	McMaster-Carr	-	Hardware
134	Payload	Ejection	9/8"x6' Hallow Aluminum Tubes	1	$ 44.27	$ 44.27	McMaster-Carr	-	Hardware

7.1.2.2. Funding Plan

The main body of funding in support of the OSRT is projected to come from the Oregon Space Grant Consortium (OSGC) Undergraduate Team Experience Award Program 2017-2018. The call for proposals went out on September 29, 2017 with reports being due November 10, 2017. The program funds student led research projects which provide a unique team experience and develop STEM and aerospace knowledge. The OSRT will be asking for the maximum request of $12,000. We feel this is necessary given the magnitude of projected budget and scope of project. A minimum of 1.5 to 1 matching obligation is required.

Acquisition of any hardware equipment will happen through two OSU departments. Any purchases made with funds not associated with the space grant award will go through the University Engineering Business Center. This group will track expenses, shipping, and store hardware for the team. Pending the grant award, the Office for Sponsored Research and Award Administration will make equipment purchases for the team. The purpose of working through these two University offices is to maintain a running budget and ensure that the finances of the project are transparent to staff.

Matching funds will primarily come from Oregon State University budgets as well as corporate sponsorships. The team has access to OSU AIAA funds along with project mentor research funds. The OSRT currently has existing donations expected for certain materials. AIAA will be sponsoring group members with branded polo's to assist in outreach efforts. Additionally, a year to year sponsor, Innovative Composite Engineering will be donating a 5" outer diameter carbon fiber airframe. Costco has an existing relationship with the AIAA program and will be solicited for donations which will assist with lodging and travel to Huntsville. Plans to contact vendors seeking reduction of equipment prices are in place. In return, the team will be promoting vendors at all public events.

7.1.2.3. Timeline

7.1.2.3.1. Structures and Propulsion

ID	Task Name	Start	Finish	Deadline
1	Request for Proposals	Wed 8/23/17	Wed 8/23/17	Wed 8/23/17
2	Proposal Due	Wed 9/20/17	Wed 9/20/17	Wed 9/20/17
3	Proposal Awards Announced	Fri 10/6/17	Fri 10/6/17	Fri 10/6/17
4	Kickoff and PDR Q&A	Thu 10/12/17	Thu 10/12/17	Thu 10/12/17
5	Website Running	Fri 11/3/17	Fri 11/3/17	Fri 11/3/17
6	PDR Due	Mon 9/18/17	Mon 9/18/17	Fri 11/3/17
7	PDR Video Teleconference	Fri 11/17/17	Fri 11/17/17	Fri 11/17/17
8	**Prototype Rover**	**Wed 9/20/17**	**Fri 12/15/17**	**NA**
9	High Level Design	Wed 9/20/17	Thu 11/2/17	NA
10	Manufacturing; Develop Test Platforms	Mon 11/6/17	Fri 12/8/17	NA
11	Unit Testing	Sat 11/11/17	Fri 12/15/17	NA
12	OSU Finals Week (Fall)	Mon 12/4/17	Fri 12/8/17	NA
13	CDR Q&A	Wed 12/6/17	Wed 12/6/17	Wed 12/6/17
14	**Full Scale Integrated Rover**	**Mon 11/20/17**	**Fri 2/9/18**	**NA**
15	Critical Design	Mon 11/20/17	Fri 12/15/17	NA
16	Manufacturing	Mon 12/18/17	Fri 1/26/18	NA
17	Full Integration Testing	Mon 1/15/18	Fri 2/9/18	NA
18	OSU Winter Break	Fri 12/8/17	Sun 1/7/18	NA
19	CDR Due	Fri 1/12/18	Fri 1/12/18	Fri 1/12/18
20	CDR Video Teleconfrences	Tue 1/16/18	Wed 1/31/18	NA
21	**Competition Rover**	**Mon 1/15/18**	**Fri 3/30/18**	**NA**
22	Review Design	Mon 1/15/18	Fri 2/9/18	NA
23	Manufacturing	Mon 2/5/18	Fri 3/2/18	NA
24	Exhaustive Testing	Mon 2/12/18	Fri 3/30/18	NA
25	FRR Q&A	Wed 2/7/18	Wed 2/7/18	Wed 2/7/18
26	FRR Due	Mon 3/5/18	Mon 3/5/18	Mon 3/5/18
27	FRR video teleconfrences	Tue 3/6/18	Thu 3/22/18	NA
28	OSU Finals Week (Winter)	Mon 3/19/18	Fri 3/23/18	NA
29	Arrive in Huntsville, AL	Wed 4/4/18	Wed 4/4/18	Wed 4/4/18
30	Launch Readiness Reviews	Wed 4/4/18	Wed 4/4/18	Wed 4/4/18
31	Launch Day	Sat 4/7/18	Sat 4/7/18	Sat 4/7/18
32	Backup Launch Day	Sun 4/8/18	Sun 4/8/18	Sun 4/8/18
33	Travel Home	Sun 4/8/18	Sun 4/8/18	Sun 4/8/18
34	PLAR Submitted	Fri 4/27/18	Fri 4/27/18	Fri 4/27/18

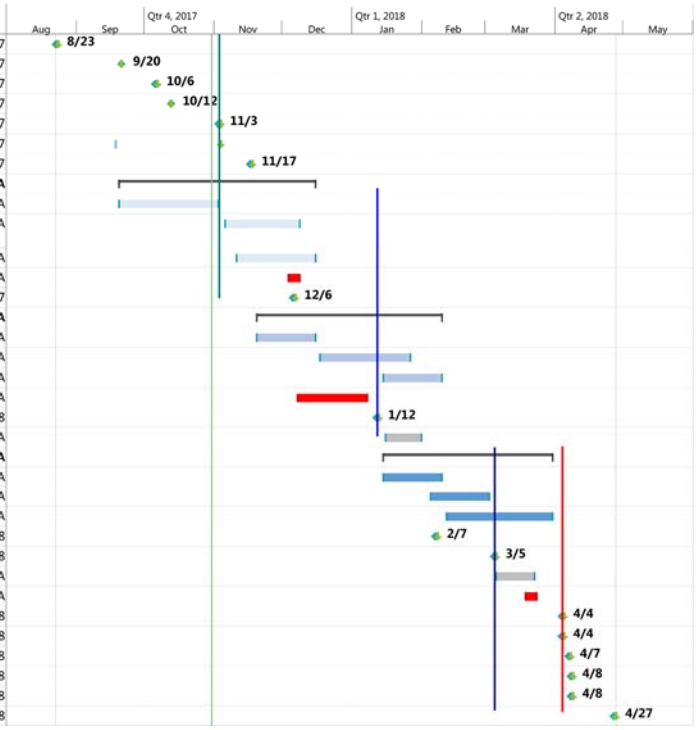

Figure 7-3: Structures and Propulsion Sub-Team Schedule

7.1.2.3.2. Aerodynamics and Recovery

ID	Task Name	Start	Finish
1	Request for Proposals	Wed 8/23/17	Wed 8/23/17
2	Proposal Due	Wed 9/20/17	Wed 9/20/17
3	Proposal Awards Announced	Fri 10/6/17	Fri 10/6/17
4	Kickoff and PDR Q&A	Thu 10/12/17	Thu 10/12/17
5	Website Running	Fri 11/3/17	Fri 11/3/17
6	PDR Due	Fri 11/3/17	Fri 11/3/17
7	PDR Video Teleconference	Fri 11/17/17	Fri 11/17/17
8	**Design**	**Wed 9/20/17**	**Fri 12/8/17**
9	Recovery System Fully designed	Wed 9/20/17	Fri 12/8/17
10	Aerodynamic System Fully designed	Wed 9/20/17	Fri 12/8/17
11	OSU Finals Week (Fall)	Mon 12/4/17	Fri 12/8/17
12	CDR Q&A	Wed 12/6/17	Wed 12/6/17
13	OSU Winter Break	Fri 12/8/17	Sun 1/7/18
14	**Testing Phase 1**	**Fri 12/8/17**	**Sun 1/7/18**
15	Sub scale launch completed	Fri 12/8/17	Sun 1/7/18
16	Ground Ejection tests completed	Fri 12/8/17	Sun 1/7/18
17	CDR Due	Fri 1/12/18	Fri 1/12/18
18	CDR Video Teleconfrences	Tue 1/16/18	Wed 1/31/18
19	**Assembly**	**Sun 1/7/18**	**Fri 2/2/18**
20	Aerodynamic subsystem assembled	Sun 1/7/18	Fri 1/19/18
21	Recovery subsystem assembled	Sun 1/7/18	Fri 1/19/18
22	All subsystems assembled on rocket	Sun 1/21/18	Fri 2/2/18
23	FRR Q&A	Wed 2/7/18	Wed 2/7/18
24	**Testing Phase 2**	**Fri 2/2/18**	**Fri 3/2/18**
25	Full scale launch - *Not yet scheduled*		
26	Parts deemed successful or redesigned from full scale	Fri 2/2/18	Fri 2/23/18
27	All parts finalized on rocket	Fri 2/23/18	Fri 3/2/18
28	FRR Due	Mon 3/5/18	Mon 3/5/18
29	FRR video teleconfrences	Tue 3/6/18	Thu 3/22/18
30	OSU Finals Week (Winter)	Mon 3/19/18	Fri 3/23/18
31	Arrive in Huntsville, AL	Wed 4/4/18	Wed 4/4/18
32	Launch Readiness Reviews	Wed 4/4/18	Wed 4/4/18
33	Launch Day	Sat 4/7/18	Sat 4/7/18
34	Backup Launch Day	Sun 4/8/18	Sun 4/8/18
35	Travel Home	Sun 4/8/18	Sun 4/8/18
36	PLAR Submitted	Fri 4/27/18	Fri 4/27/18

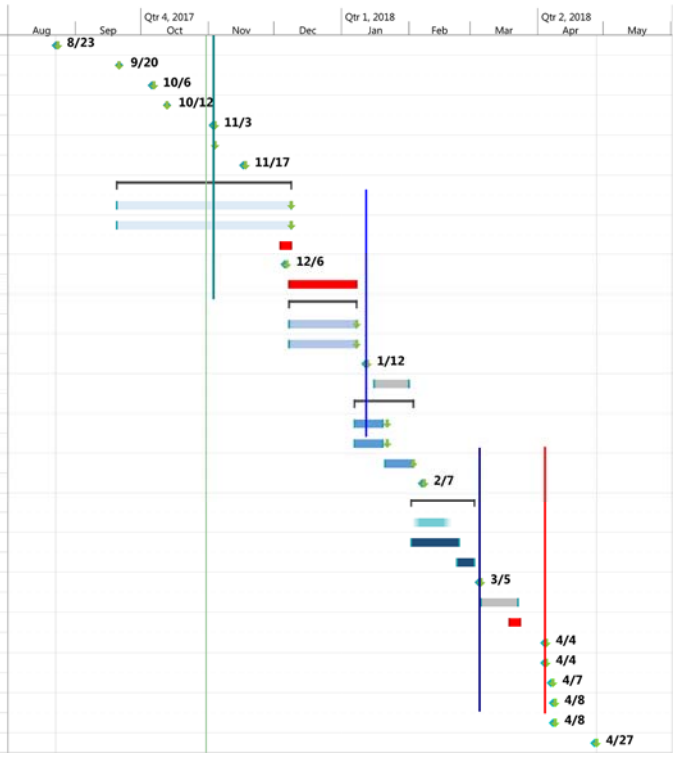

Figure 7-4: Aerodynamics and Recovery Sub-Team Schedule

7.1.2.3.3. Payload

ID	Task Name	Start	Finish
1	Request for Proposals	Wed 8/23/17	Wed 8/23/17
2	Proposal Due	Wed 9/20/17	Wed 9/20/17
3	Proposal Awards Announced	Fri 10/6/17	Fri 10/6/17
4	Kickoff and PDR Q&A	Thu 10/12/17	Thu 10/12/17
5	Website Running	Fri 11/3/17	Fri 11/3/17
6	PDR Due	Fri 11/3/17	Fri 11/3/17
7	PDR Video Teleconference	Fri 11/17/17	Fri 11/17/17
8	**Prototype Rover**	**Wed 9/20/17**	**Fri 12/15/17**
9	High Level Design	Wed 9/20/17	Thu 11/2/17
10	Manufacturing; Develop Test Platforms	Mon 11/6/17	Fri 12/8/17
11	Unit Testing	Sat 11/11/17	Fri 12/15/17
12	OSU Finals Week (Fall)	Mon 12/4/17	Fri 12/8/17
13	CDR Q&A	Wed 12/6/17	Wed 12/6/17
14	**Full Scale Integrated Rover**	**Mon 11/20/17**	**Fri 2/9/18**
15	Critical Design	Mon 11/20/17	Fri 12/15/17
16	Manufacturing	Mon 12/18/17	Fri 1/26/18
17	Full Integration Testing	Mon 1/15/18	Fri 2/9/18
18	OSU Winter Break	Fri 12/8/17	Sun 1/7/18
19	CDR Due	Fri 1/12/18	Fri 1/12/18
20	CDR Video Teleconfrences	Tue 1/16/18	Wed 1/31/18
21	**Competition Rover**	**Mon 1/15/18**	**Fri 3/30/18**
22	Review Design	Mon 1/15/18	Fri 2/9/18
23	Manufacturing	Mon 2/5/18	Fri 3/2/18
24	Exhaustive Testing	Mon 2/12/18	Fri 3/30/18
25	FRR Q&A	Wed 2/7/18	Wed 2/7/18
26	FRR Due	Mon 3/5/18	Mon 3/5/18
27	FRR video teleconfrences	Tue 3/6/18	Thu 3/22/18
28	OSU Finals Week (Winter)	Mon 3/19/18	Fri 3/23/18
29	Arrive in Huntsville, AL	Wed 4/4/18	Wed 4/4/18
30	Launch Readiness Reviews	Wed 4/4/18	Wed 4/4/18
31	Launch Day	Sat 4/7/18	Sat 4/7/18
32	Backup Launch Day	Sun 4/8/18	Sun 4/8/18
33	Travel Home	Sun 4/8/18	Sun 4/8/18
34	PLAR Submitted	Fri 4/27/18	Fri 4/27/18

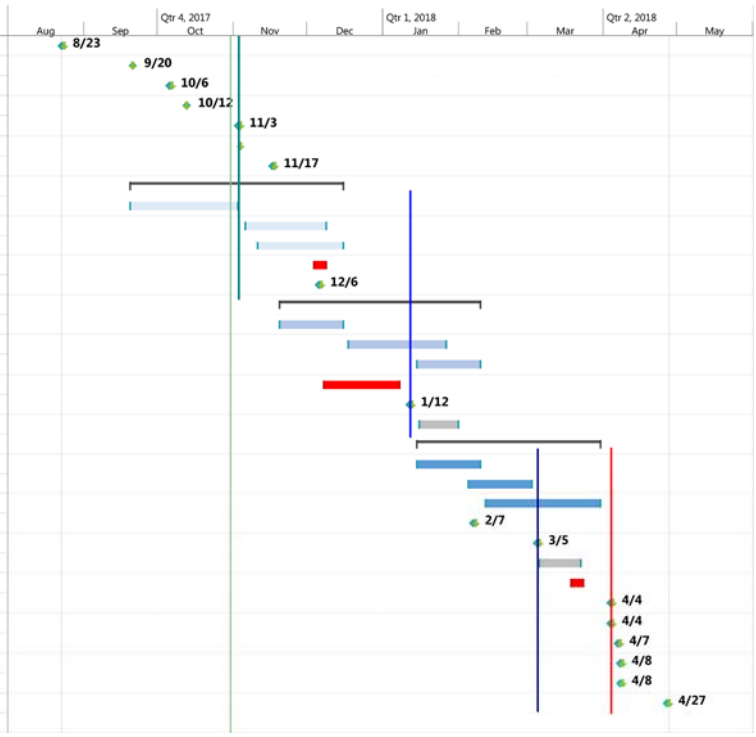

Figure 7-5: Payload Sub-Team Schedule

8. Educational Outreach

8.1. Silver Crest School (K8)

On Friday October 27th, 2017 a group of approximately twenty-one students from Silver Crest School arrived at the Oregon State University Campus. They were greeted by the educational outreach coordinator and the team advisor Dr. Nancy Squires who directed them into BAT 150 to present them with what our team is about. Dr. Squires outlined opportunities for students their age to get involved in the aerospace industry and internships available from eighth grade all the way into college. Following Dr. Squires, the team went through a prepared presentation about what the University Student Launch Initiative (USLI) competition encompasses for the team as a whole and about rocketry fundamentals essential to understanding how the models take flight. Leaving the classroom, the students were then given a tour of the AIAA lab and a display of former competition rockets.

Figure 8-1: 8th Grader Rocket Build Day

For the majority of the outreach event, the students were given kits to assemble their rockets in the lab. Each table had at least one to two senior design team members building with the students and assisting where necessary. The building process was given over an hour of work for the students and staff. Following the build time and lunch break, the students were taken out to an open field to witness the launch of each and every rocket created. Maintaining safe distances and precautions, the rockets were preloaded with the engine and insulation to protect the parachutes on the interior by team members only. Additionally, each rocket was primed with an electrical launch pad as can be seen in Figure 8-2 which allowed our other advisor present, John Lyngdal, to remotely launch each rocket with his control station twenty feet away. As the rockets were loaded with only A motors, they were easily viewed through their full launch cycle and easily retrieved from their landing sites for each student to take home with them. As the school group was also comprised of two separate rocket clubs (Silver Crest Rocket Club & Rock-It-Girls), this was a fun opportunity for them to see college applications of rocketry and to fly more rockets of their own.

Figure 8-2: 8th Grader Rocket Launch

8.2. Overall Mission

With an ultimate goal of reaching over two hundred students before our launch date in April, each month the team will attempt to attend two outreach events. Currently, we have completed one event for October with Silver Crest School (K8 school) and have two scheduled for November with Sunset High School and Sprague High School. To ensure we have back-ups for potential scheduling conflicts, three other schools have been contacted and are coordinating potential dates and times. For future scheduling, the educational outreach coordinator has compiled schools that have been attended by members of the USLI team and emailing the points of contacts given along with cc'ing the principle to schedule future dates and times. Additionally, the team is in the process of acquiring multiple supplies and kits to build interactions with the students. The final lesson plan for each outreach event are reviewed by the outreach school's teacher(s) and approved to align with their current lesson plans.

9. Appendix A: Drawings and Schematics

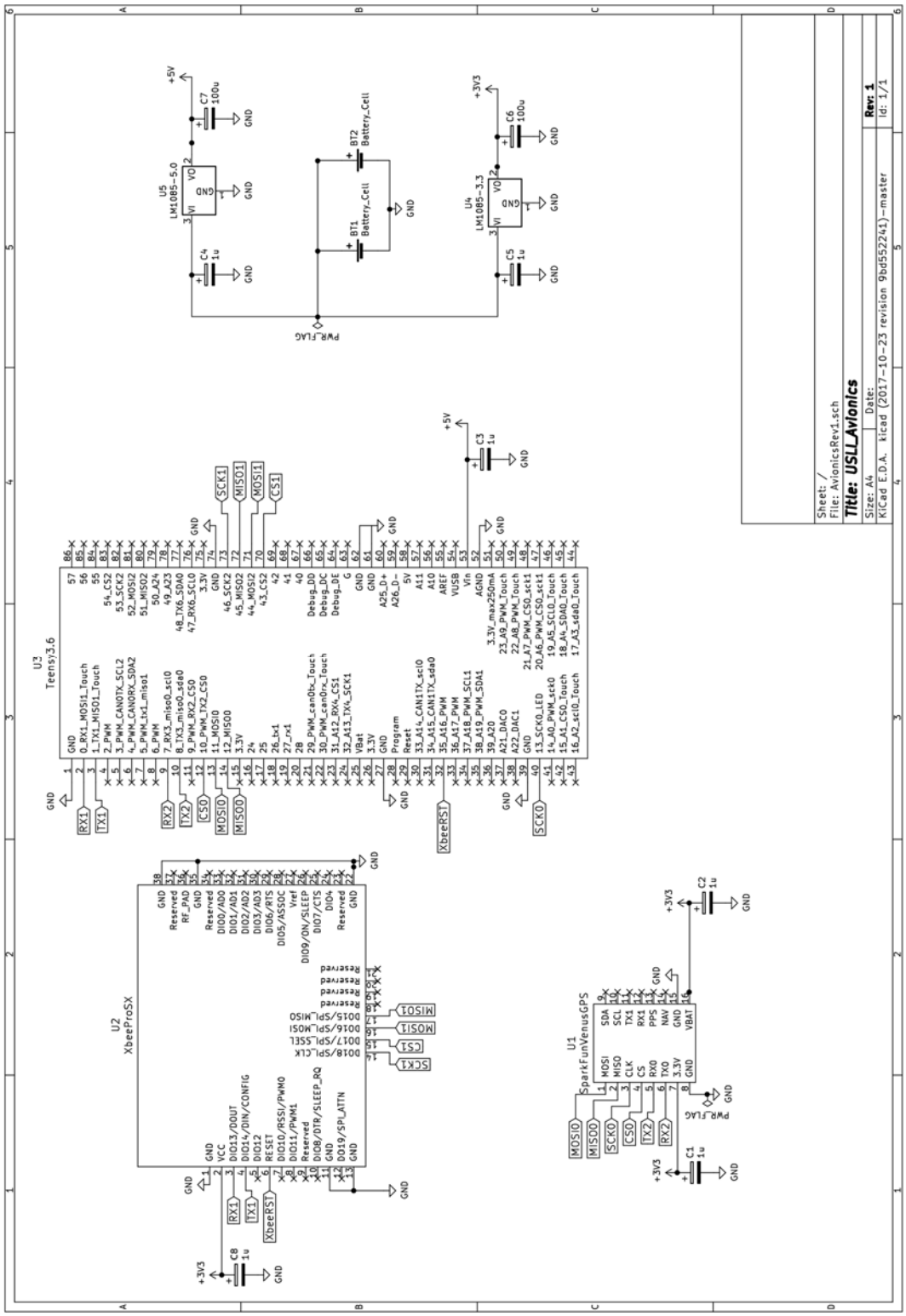

Figure 9-1: Avionics Schematic

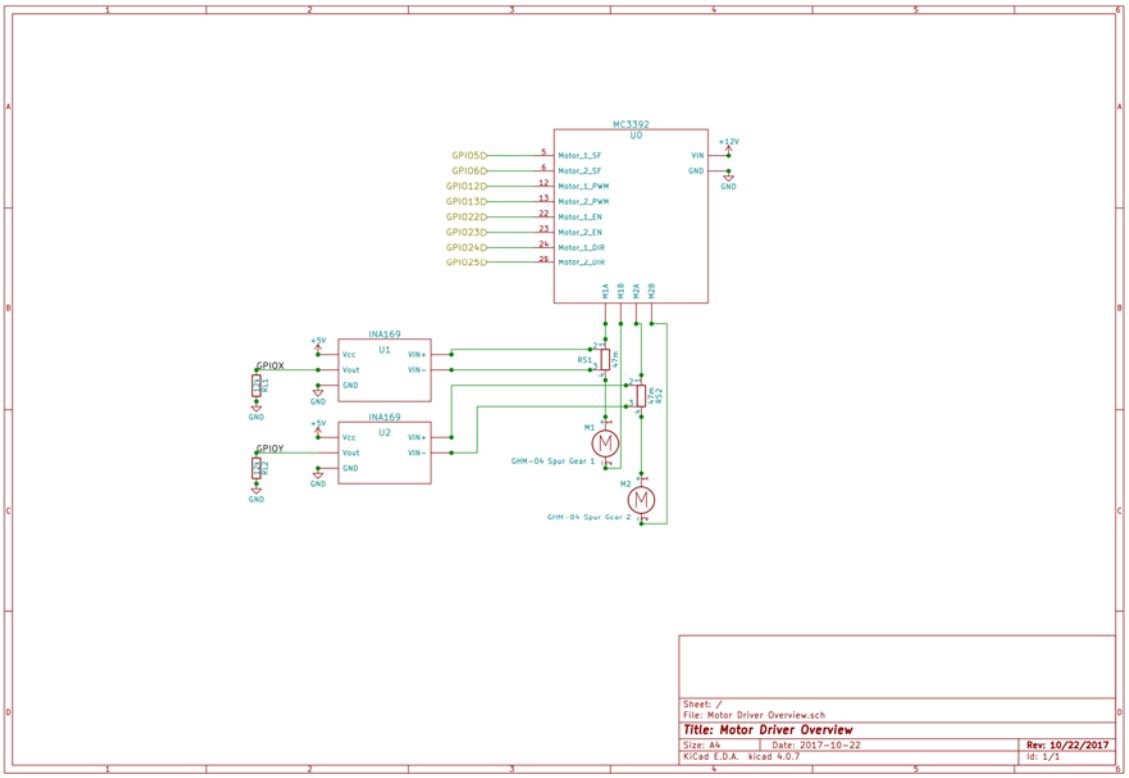

Figure 9-2: Payload Motor Driver Schematic

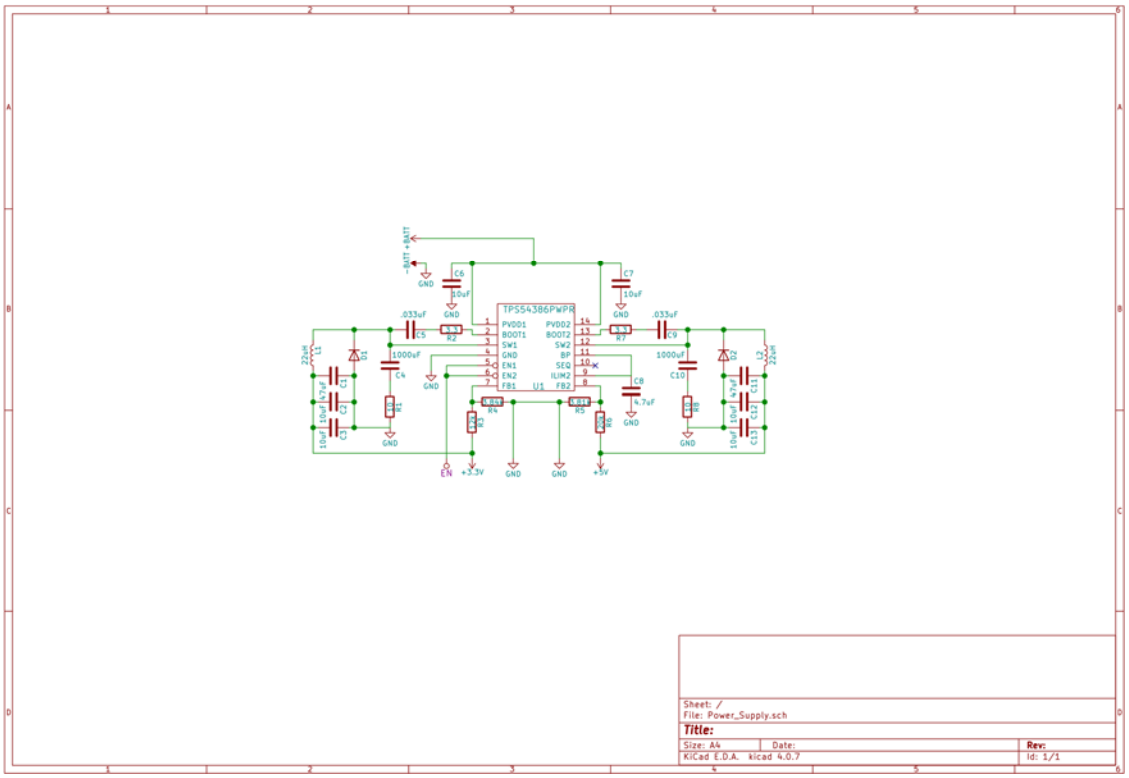

Figure 9-3: Payload Power Supply Schematic

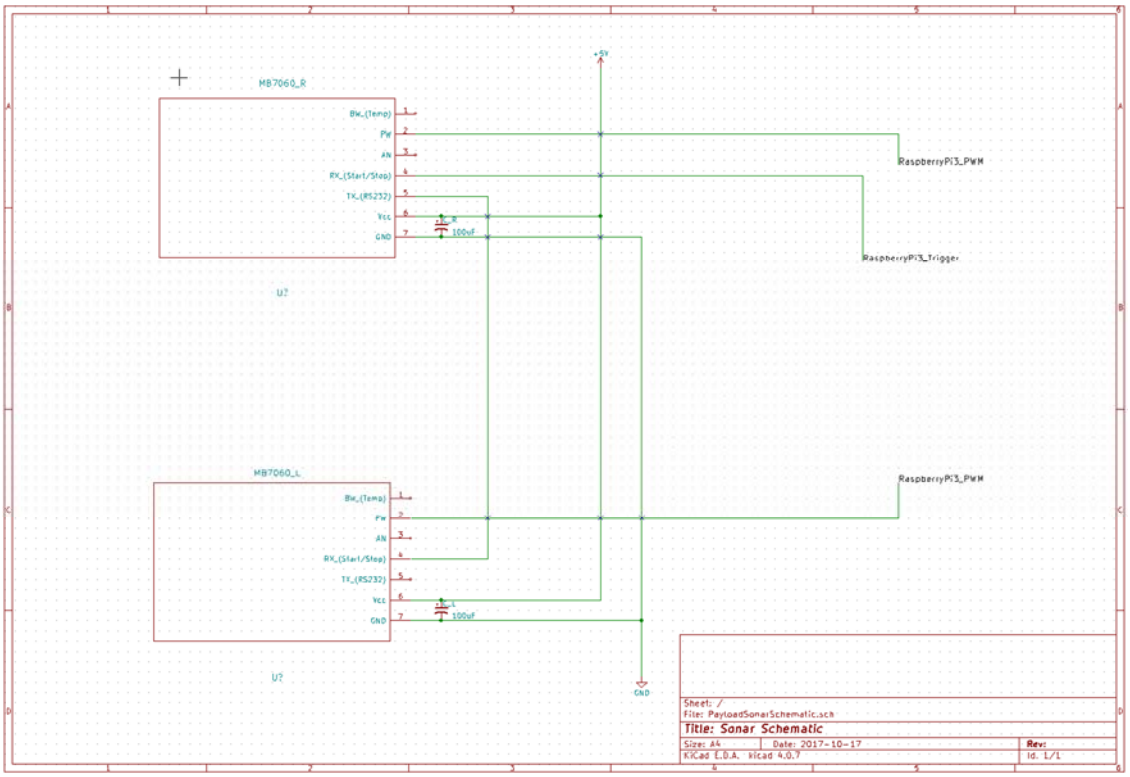

Figure 9-4: Payload Sonar Module Schematic

Appendix B: Preliminary Checklists

Launch Vehicle Assembly Checklist

Initial Task

____ Remove motor retainer

Stop: Next step to be carried out only by team mentor

____ Insert motor into motor casing

____ Replace motor retainer

____ Place motor into motor housing

____ Test avionics batteries

Caution: Electric shock is batteries handled improperly

____ Set all arming switches to the off position

Check: Double check all switches are in the off position before any power is attached to electrical systems.

____ Connect batteries to avionics system

____ Insert avionics bays into nose cone and aft avionics bay

____ Secure avionics bays to bulkheads

____ Attach payload ejection system to payload bulkhead

____ Place rover in housing

____ Snap rover housing to rover ejection system

Stop: Next step to be carried out only by team mentor

____ Attach black powder charges to payload ejection system

Stop: Next step to be carried out only by team mentor

____ Attach black powder charges to altimeters in avionics

____ Insert prepacked parachutes into recovery bays

Check: Preform visual inspection of parachute packing for visible flaws

____ Slide launch vehicle sections together

____ Secure launch vehicle sections with shear pins

____ Preform final visual inspection for launch vehicle for flaws or misplaced objects

Signatures of Key Members

_____ Safety Officer

_____ Structures Assembly Lead

_____ Payload Assembly Lead

_____ Recovery Assembly Lead

Pre-Flight Checklist

Initial Task

____ Wait for Range Safety Officer to approve launch

Stop: Only priority personnel are to approach the launch pad

____ Place launch vehicle on launch rail

____ Arm all 4 altimeters

Check: Wait for three beeps to confirm arming

____ Arm telemetry with external switches

____ Arm payload ejection switch

____ Check connection to ground station

____ Clear pad for launch

Signatures

_____ Safety Officer

Appendix C: Table of Figures

Figure 1-1: Team Organization Chart 2
Figure 4-1: Leading Airframe Design 14
Figure 4-2: Elliptical Canopy 19
Figure 4-3: Toroidal Canopy 20
Figure 4-4: TAC Deployment Bag 22
Figure 4-5: Missile Works RRC3 23
Figure 4-6: Jolly Logic Chute Release 25
Figure 4-7: Defy Gravity Tether 25
Figure 4-8: Terminal Velocity Plot for Aft Section 29
Figure 4-9: Terminal Velocity Plot for Fore Section 30
Figure 4-10: Recovery System Timing and Event Diagram 31
Figure 4-11: Fore Section Recovery System Layout (Not Shown to Scale) 32
Figure 4-12: Aft Section Recovery System Layout (Not Shown to Scale) 33
Figure 4-13: Avionics Block Diagram 34
Figure 4-14: GPS Communication (IEEE GPS Technology) 35
Figure 4-15: Xbee UART Comm. Datasheet 38
Figure 4-16: Cisco Antenna White Papers 39
Figure 4-17: Cisco Antenna White Papers 40
Figure 4-18: OpenRocket model of the launch vehicle 43
Figure 4-19: 10 mph flight profile simulation 43
Figure 4-20: Simulated Launch Vehicle Stability 44
Figure 4-21: Vertical Trajectories of the descent phase 45
Figure 4-22: OpenRocket 20 mph wind drift analysis 46
Figure 6-1: Aluminum Framed Chassis 55
Figure 6-2: Carbon Fiber Truss Structure 56
Figure 6-3: Side View of Rover with Orthogonal 1 and 2-Hinge Designs 58
Figure 6-4: Top View of Rover with Parallel 1-Hinge Stabilizer 58
Figure 6-6a: Open Structured Wheel, Honeycomb Core, Carbon Fiber Shell 59
Figure 6-6b: Closed Structured Wheel with Polyurethane Grips 59
Figure 6-8a: Extended Expandable Wheel Structure, Diameter of 6.2 inches 60
Figure 6-8b: Compressed Expandable Wheel Structure, Diameter of 4.5 inches 60
Figure 6-11a: GHM-04 Spur Gear brushed motor. 62
Figure 6-11b: Pololu Metal brushed gear motor. 62
Figure 6-11c: FIT 0441 Brushless DC Motor. 62
Figure 6-15c: G2 High-Power Motor Driver 23v13 64
Figure 6-15d: Cytron 13A, 5-30V Single DC Motor Controller 64
Figure 6-15a: Cytron 10A 5-25V Dual Channel DC Motor Driver 64
Figure 6-15b: Pololu Dual MC33926 Motor Driver for Raspberry Pi 64
Figure 6-18a: INA169 Current Sensor 66
Figure 6-18b: INA219 DC Current Sensor 26V ±3.2A Max 66
Figure 6-18c: Electronic Brick ±5A ACS712 Current Sensor 66
Figure 6-20a: Drivetrain assembly 68
Figure 6-20b: Cross-sectional view of drivetrain for viewing of bearings 68
Figure 6-21: Drivetrain Sub-Assembly 69

Figure 6-24a: LIDAR-Lite3 72
Figure 6-24b: HC-SR04 Ultrasonic Range Finder 72
Figure 6-24c: MB7360 Sonar Module 72
Figure 6-25: Dimensions of MP7360 Sonar Module 74
Figure 6-26: Turnigy Graphene 950mAh 1S 65C LiPo Pack 76
Figure 6-27: TPS54386PWPR Voltage Regulator 77
Figure 6-28: Solenoid Assembly 80
Figure 6-29: Advanced Retention and Release Device 80
Figure 6-30: Linear Actuator 81
Figure 6-31: Lead Screw 81
Figure 6-32: Carbon Fiber Attachment Diagram 83
Figure 6-34a: Rover Housing Open View 84
Figure 6-34b: Rover Housing Closed View 84
Figure 6-35: Rover Housing Exploded View 84
Figure 6-36: View of Solar Array Assembly Folded 87
Figure 6-37: Solar Array Assembly Unfolded 87
Figure 6-38: High Level Block Diagram 91
Figure 6-2a: Integrated Rover Design – all mechanical and major electrical systems 96
Figure 6-2b: Rear view of leading design, showing batteries 96
Figure 7-3: Structures and Propulsion Sub-Team Schedule 120
Figure 7-4: Aerodynamics and Recovery Sub-Team Schedule 121
Figure 7-5: Payload Sub-Team Schedule 121
Figure 0-1: Avionics Schematic 124
Figure 0-2: Payload Motor Driver Schematic 125
Figure 0-3: Payload Power Supply Schematic 125
Figure 0-4: Payload Sonar Module Schematic 126

Appendix D: Acronym Dictionary

AGL	Above Ground Level
AIAA	American Institute of Aeronautics and Astronautics
Al	Aluminum
APCP	Ammonium Perchlorate Composite Propellant
ARRD	Advanced Retention and Release Device
ATF	Alcohol Tobacco Firearms
CAR	Canadian Association of Rocketry
CDR	Critical Design Review
CF	Carbon Fiber
CG	Center of Gravity
CL	Center of Lift
CO2	Carbon Dioxide
DC	Direct Current
EIT	Electronic and Information Technology
EMI	Electromagnetic Interference
EUROC	Eugene Rocketry
FAA	Federal Aviation Administration
FN	Foreign National
FRR	Flight Readiness Review
GPIO	General Purpose Inputs and Outputs
GPS	Global Positioning System
GRC	Gorge Rocketry Club
HART	High Altitude Rocket Team at Oregon State University
HDPE	High-density polyethylene
HPR	High Powered Rocketry
I/O	Inputs and Outputs
I2C	Inter-Integrated Circuit
IEEE	Institute of Electrical and Electronics Engineers
IMU	Inertial Measurement Unit

JST	Japan Solderless Terminal
KE	Kinetic Energy
LDO	Low Drop Out Regulators
LED	Light Emitting Diode
LED	National Association of Rocketry
LIDAR	Light Detection and Ranging
LiPo	Lithium Polymer
LLR	Launch Readiness Review
MPRL	Machine Product and Realization Laboratory
MRPT	Mobile Robotics Programming Toolkit
MRDS	Microsoft Robotics Developer Studio
MSDS	Material Safety Data Sheet
mWH	Milliwatt-Hour
NAR	National Association of Rocketry
NASA	National Aeronautics and Space Administration
NFPA	National Fire Protection Agency
NiMH	Nickel Metal Hydride
OD	Outer Diameter
OR	Oregon
OREO	Oregon Rocketry Enthusiasts Organization
OROC	Oregon Rocketry
OSGC	Oregon Space Grant Consortium
OSRT	Oregon State Rocket Team
OSU	Oregon State University
PCB	Printed Circuit Board
PDR	Preliminary Design Review
PPE	Personal Protective Equipment
RADAR	Radio Detection and Ranging
RC	Remote Control
RF	Radio-Frequency

ROS	Robot Operating System
RPM	Rotations per Minute
RSO	Range Safety Officer
RSP	Range Service Provider
RX	Receive
SMA	Sub-Miniature Version A Connector
SPI	Serial Peripheral Interface
STEM	Science, Technology, Engineering and Mathematics
TAP	Technical Advisor Panel
ToF	Time of Flight
TRA	Tripoli Rocketry Association
TX	Transmit
UART	Universal Asynchronous Receiver-Transmitter
US	United States
USLI	University Student Launch Initiative
9DOF	Nine Degree of Freedom