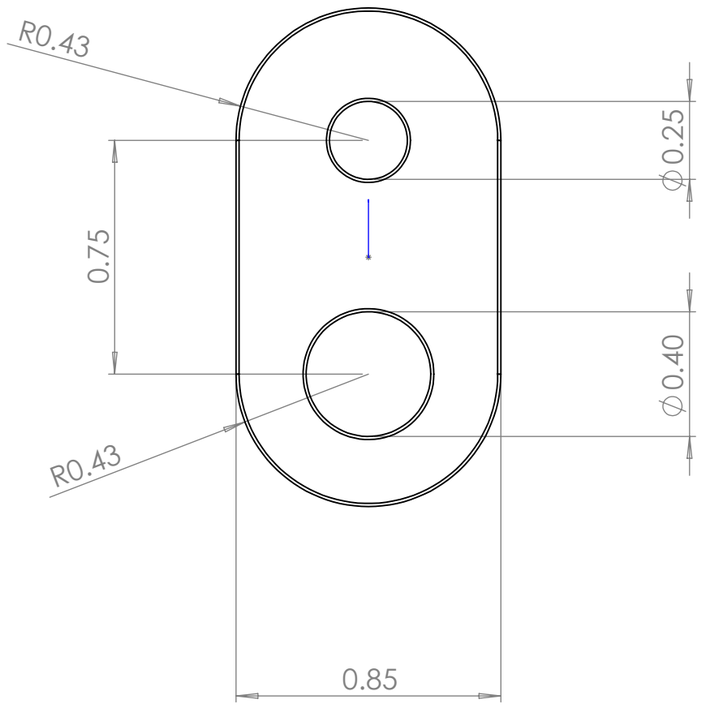

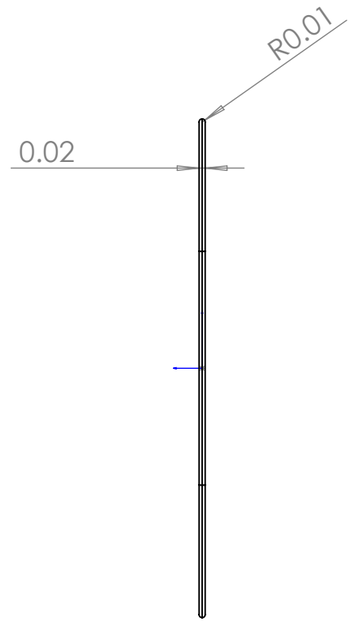

NOTES: Drill holes in sheet steel, and then trim edges to shape

Use sharp shears. Part must be flat.

UNLESS OTHERWISE SPECIFIED: DIMENSIONS ARE IN INCHES TOLERANCES: 0.X ± 0.1 0.XX ± 0.01 0.XXX ± 0.005	FINISH:			DEBURR AND BREAK SHARP EDGES	DO NOT SCALE DRAWING	REVISION 1
	NAME	SIGNATURE	DATE		TITLE: Gear Coupler	
DRAWN	Bradley Anderson					
CHK'D						
APPV'D						
MFG						
Q.A				MATERIAL: Steel	DWG NO.	A3
				WEIGHT:	SCALE:2:1	SHEET 1 OF 1

SOLIDWORKS Educational Product. For Instructional Use Only.