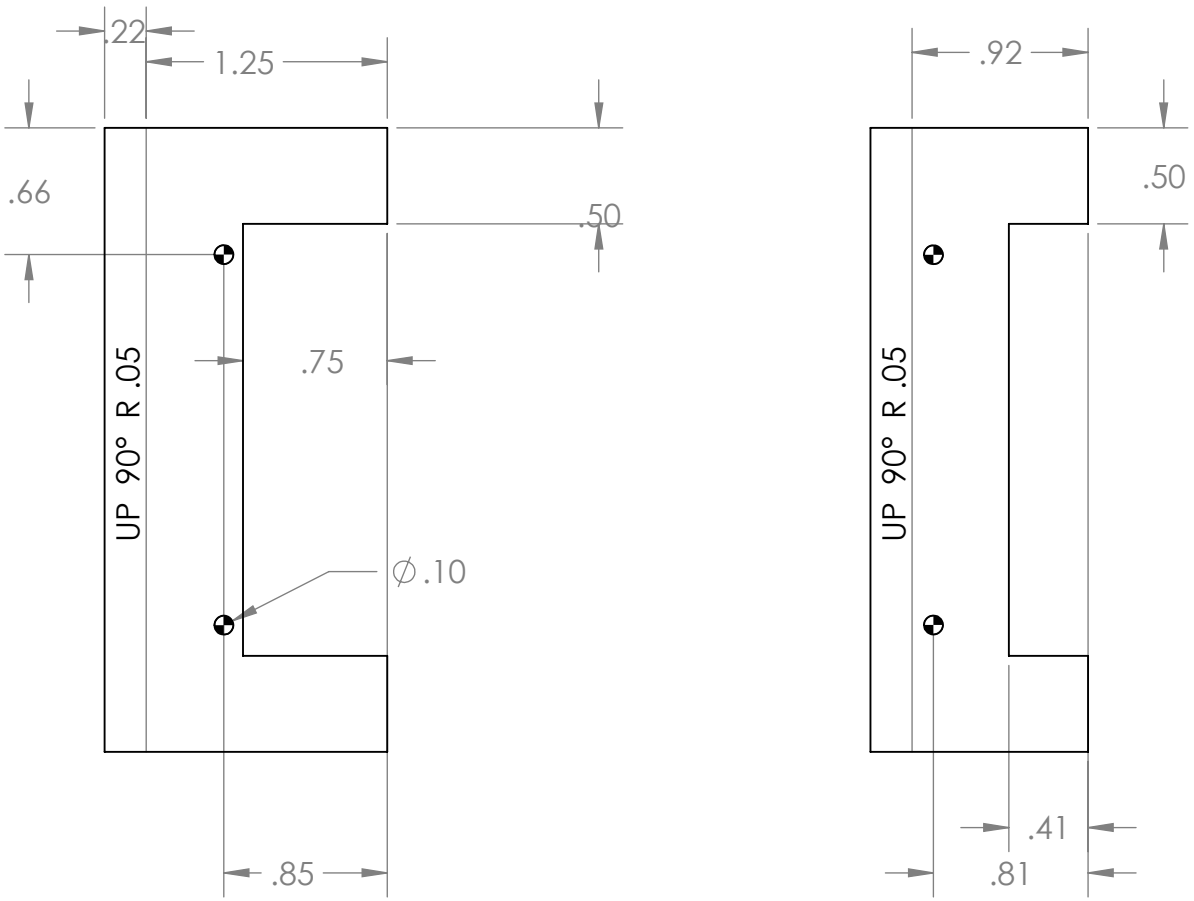

UNLESS OTHERWISE SPECIFIED: DIMENSIONS ARE IN INCHES TOLERANCES: 0.X ± 0.1 0.XX ± 0.01 0.XXX ± 0.005	FINISH: —			DEBURR AND BREAK SHARP EDGES	DO NOT SCALE DRAWING	REVISION
	NAME	SIGNATURE	DATE		TITLE:	
DRAWN	TDP				Electronics Mounts	
CHK'D						
APPV'D						
MFG						
Q.A				MATERIAL:	DWG NO.	A
				WEIGHT:	SCALE:1:1	SHEET 1 OF 1