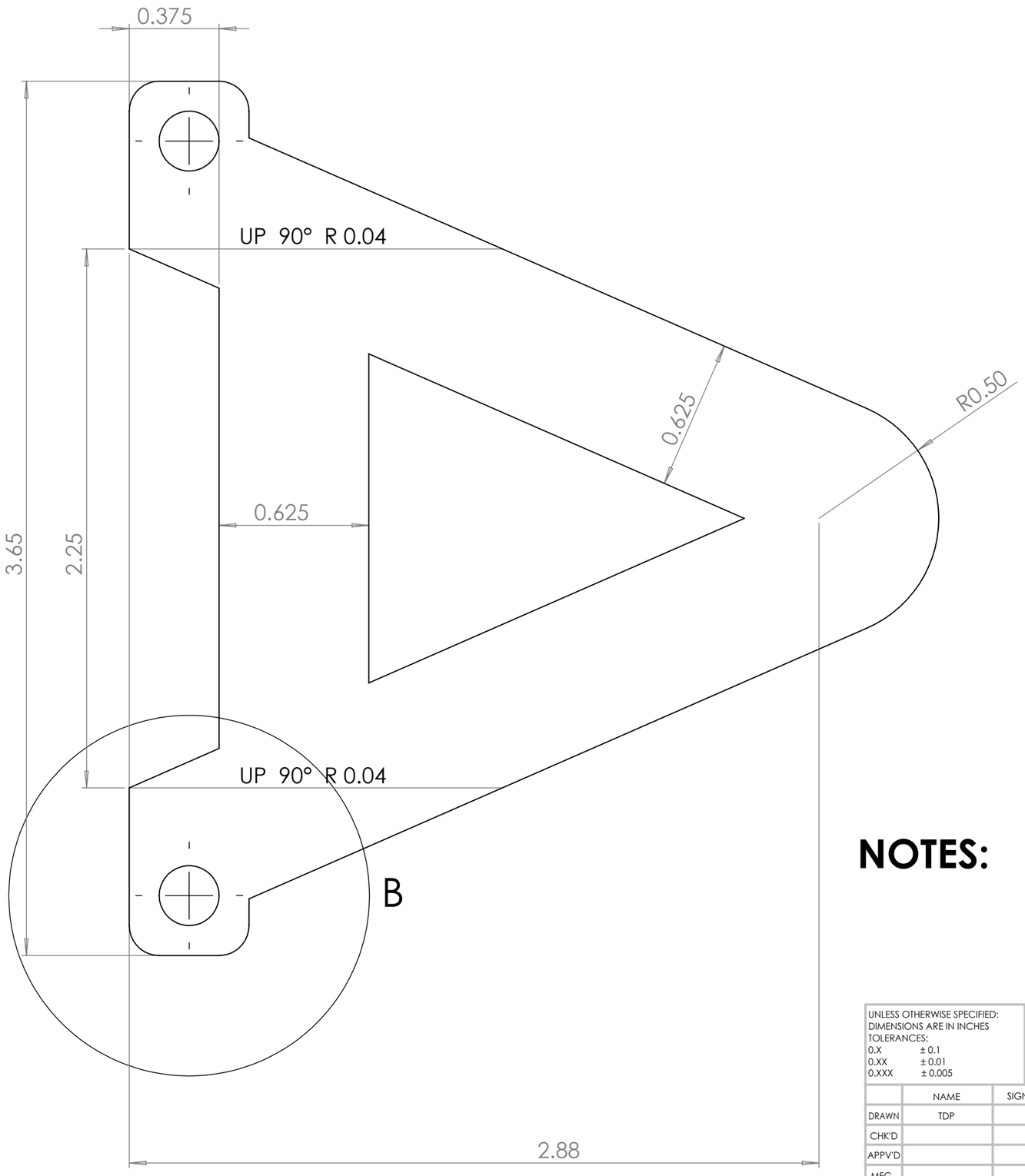

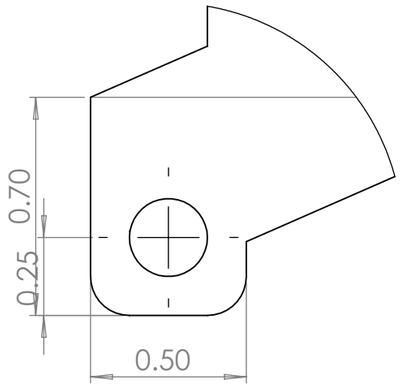

DETAIL B

NOTES:

UNLESS OTHERWISE SPECIFIED: DIMENSIONS ARE IN INCHES TOLERANCES: 0.X ± 0.1, 0.XX ± 0.01, 0.XXX ± 0.005	FINISH:			DEBURR AND BREAK SHARP EDGES	DO NOT SCALE DRAWING	REVISION	A
	NAME	SIGNATURE	DATE		TITLE: Stabilizer		
DRAWN	TDP		12/5/17				
CHK'D							
APPV'D							
MFG							
Q.A				MATERIAL: Carbon Fiber	DWG NO.		A3
				WEIGHT:	SCALE:2:1	SHEET 1 OF 1	