CONNECTORS/BUSES

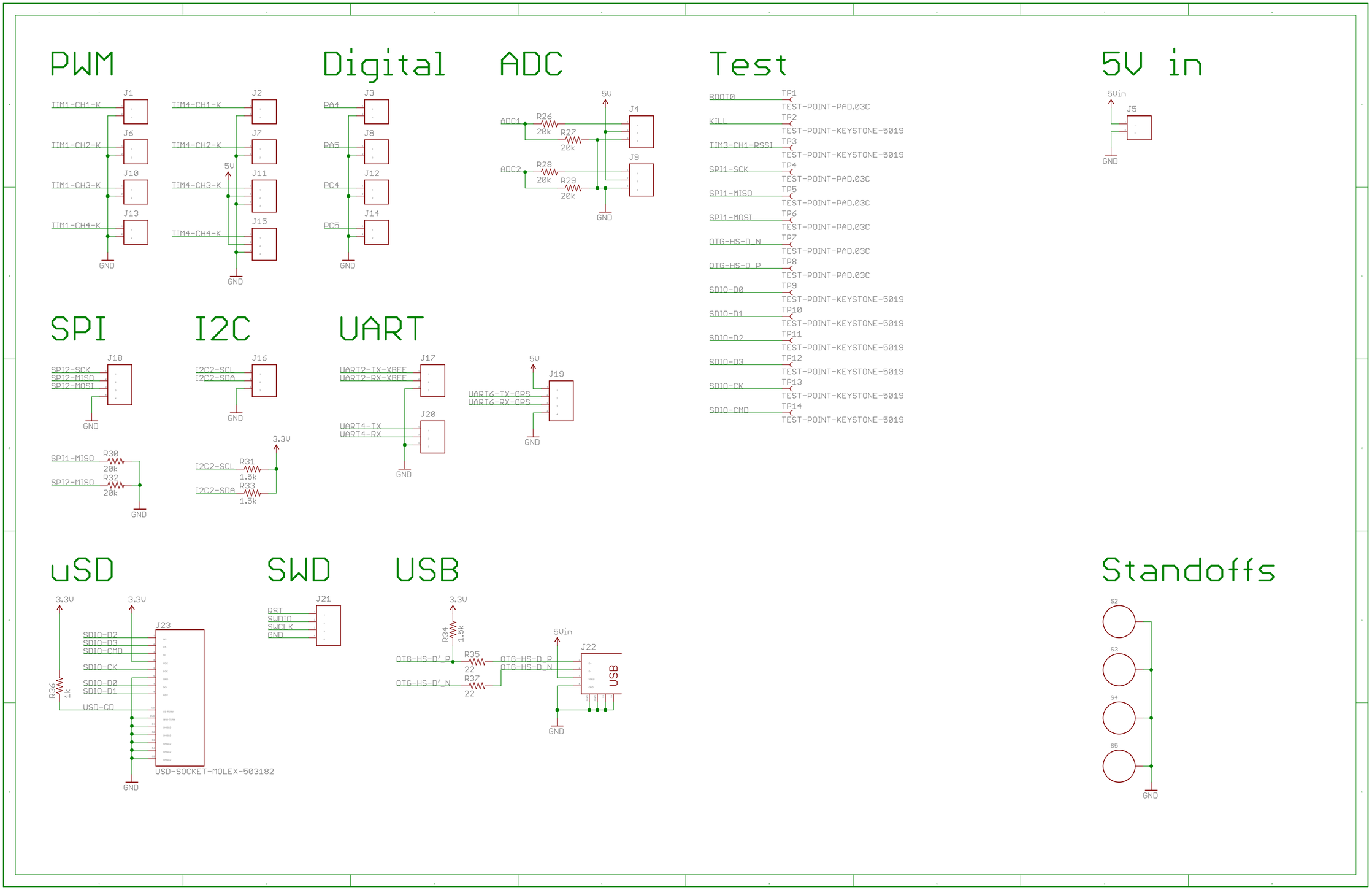

POWER

3.3V 500mA

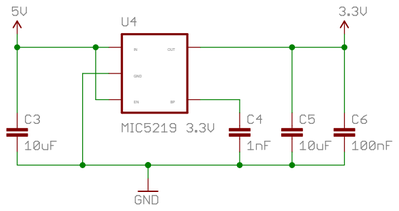

TVS/RVP

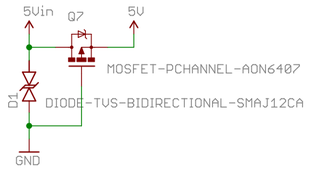

STM32F4

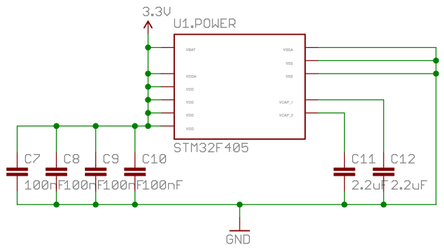

Place caps near VDD and VCAP pads

XBee

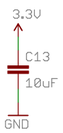

MPU-9250

VDD

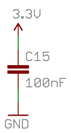

VDDIO

REG

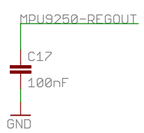

MS5611

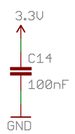

LOGIC

STM32F4

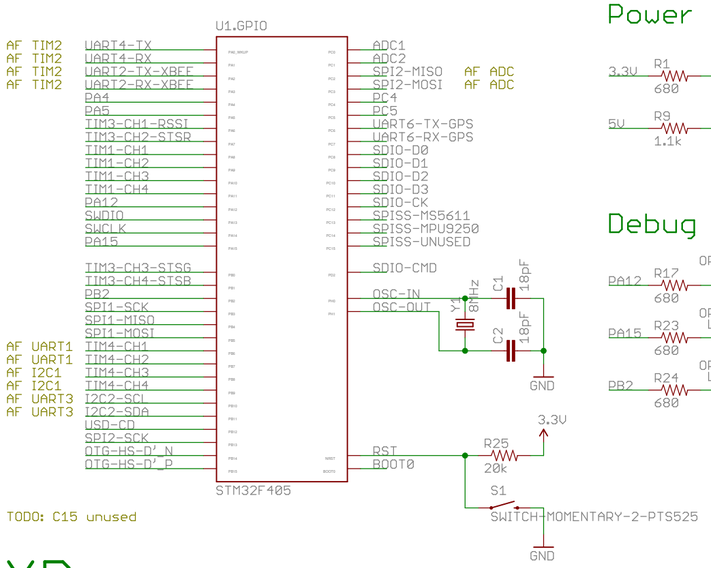

TODO: C15 unused

LEDs

Power

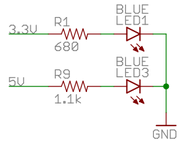

Debug

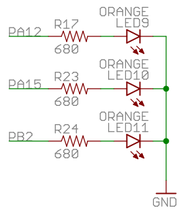

XBee

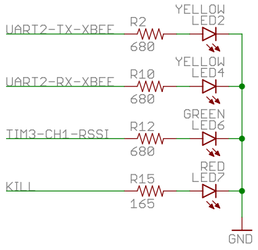

Place KILL LED someplace obvious

Status

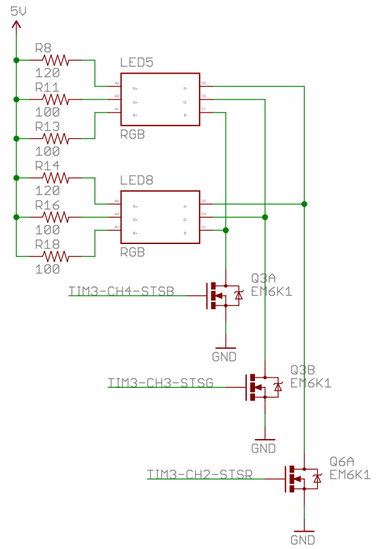

KILL

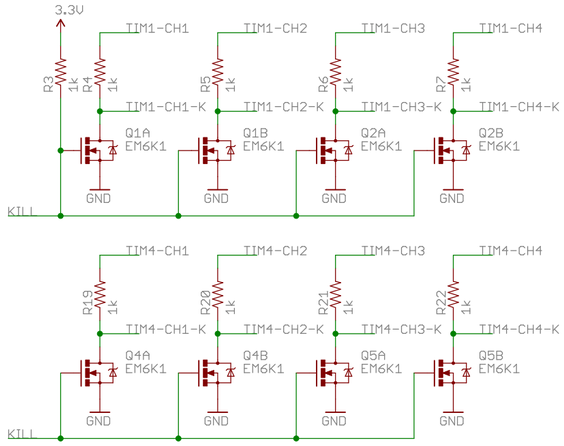

1K pullup on KILL pulls TIM1 and TIM4 channels down until the XBee deasserts KILL.

XBee

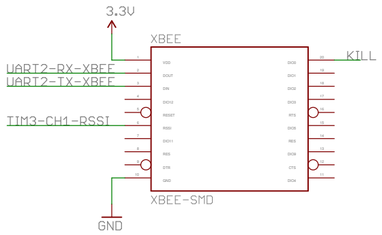

MPU-9250

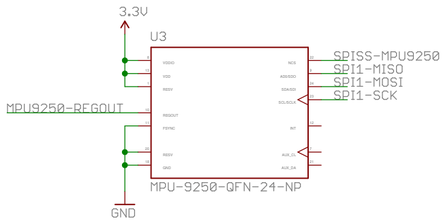
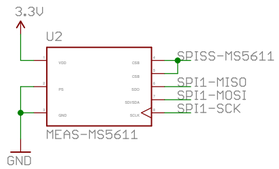
MS5611