.123456.001 -3

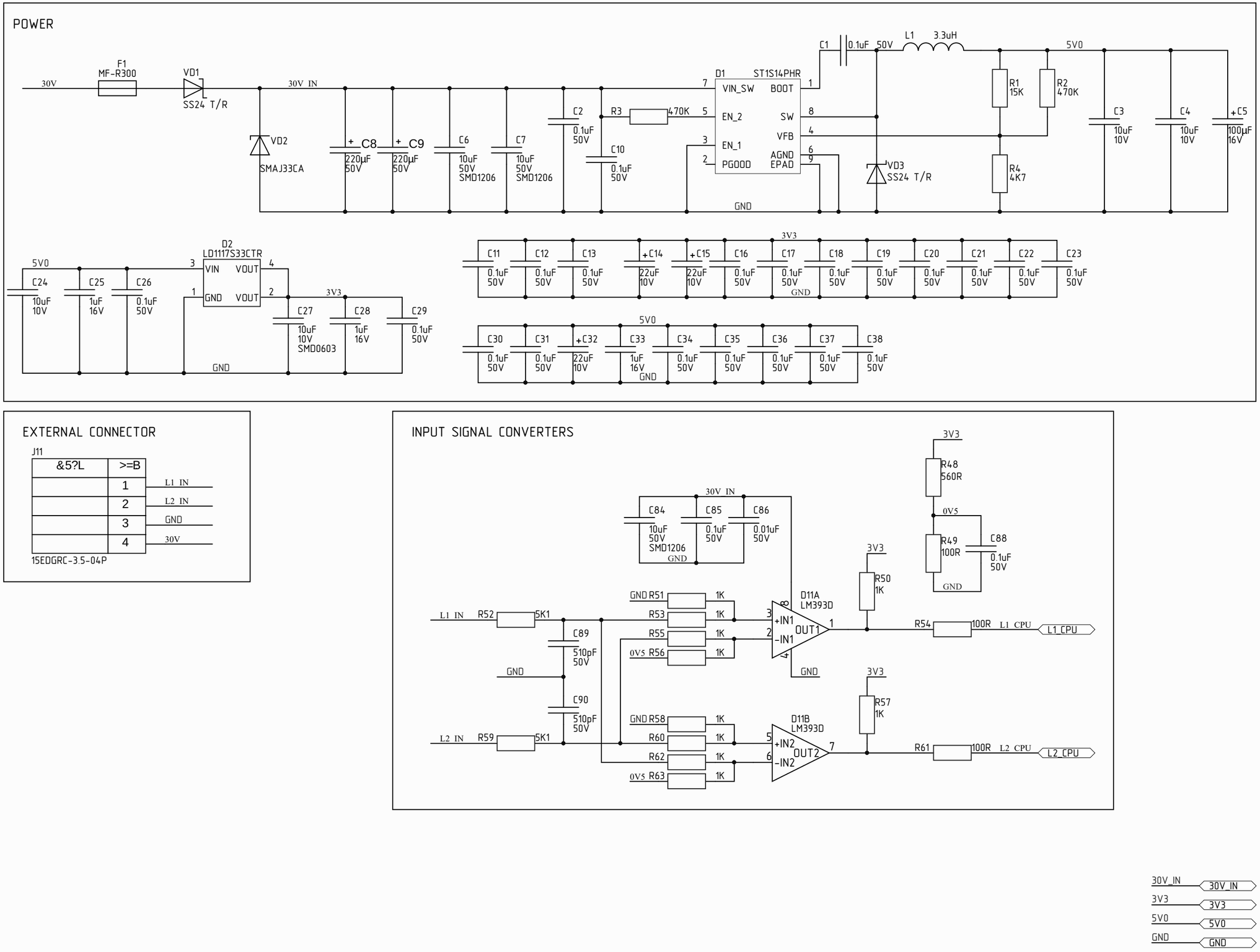

					.123456.001 -3	8AB
7<	8AB	! 4>:C<	>4?	0B0		1

>4? 8 40B0

=2! 4C1;:

70< 8=2!

>4? 8 40B0

=2! ?>4;:

2.106-A3

>?8@>20;

$>@<0B 3

HDMI TO RGB CONVERTER POWER

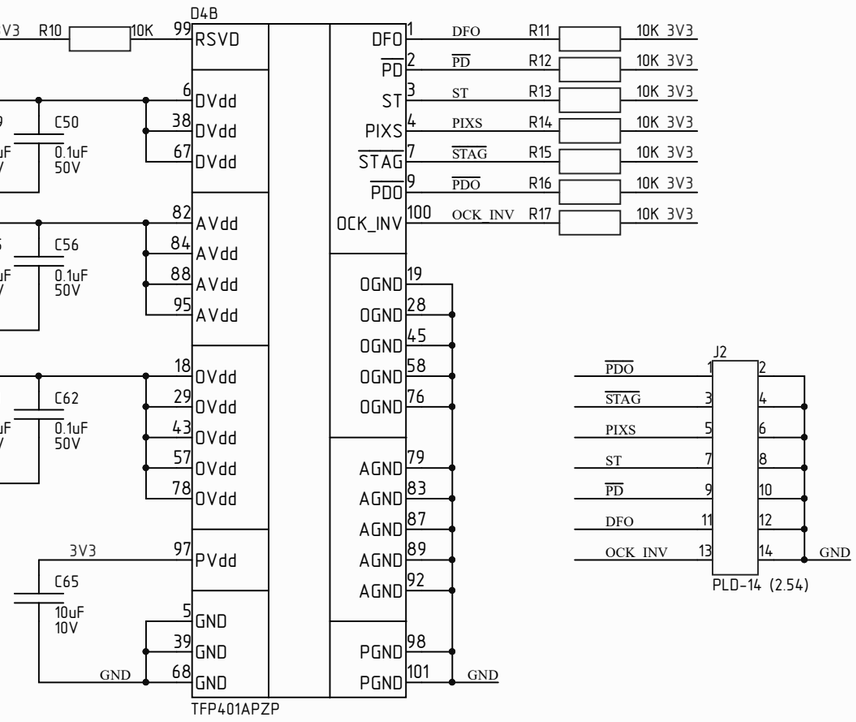

GND GND

3V3 3V3

					.123456.001 -3	8AB
7<	8AB	! 4>:C<	>4?	0B0		2

2.106-A3

>?8@20;

$>@<0B 3

HDMI TO RGB CONVERTER

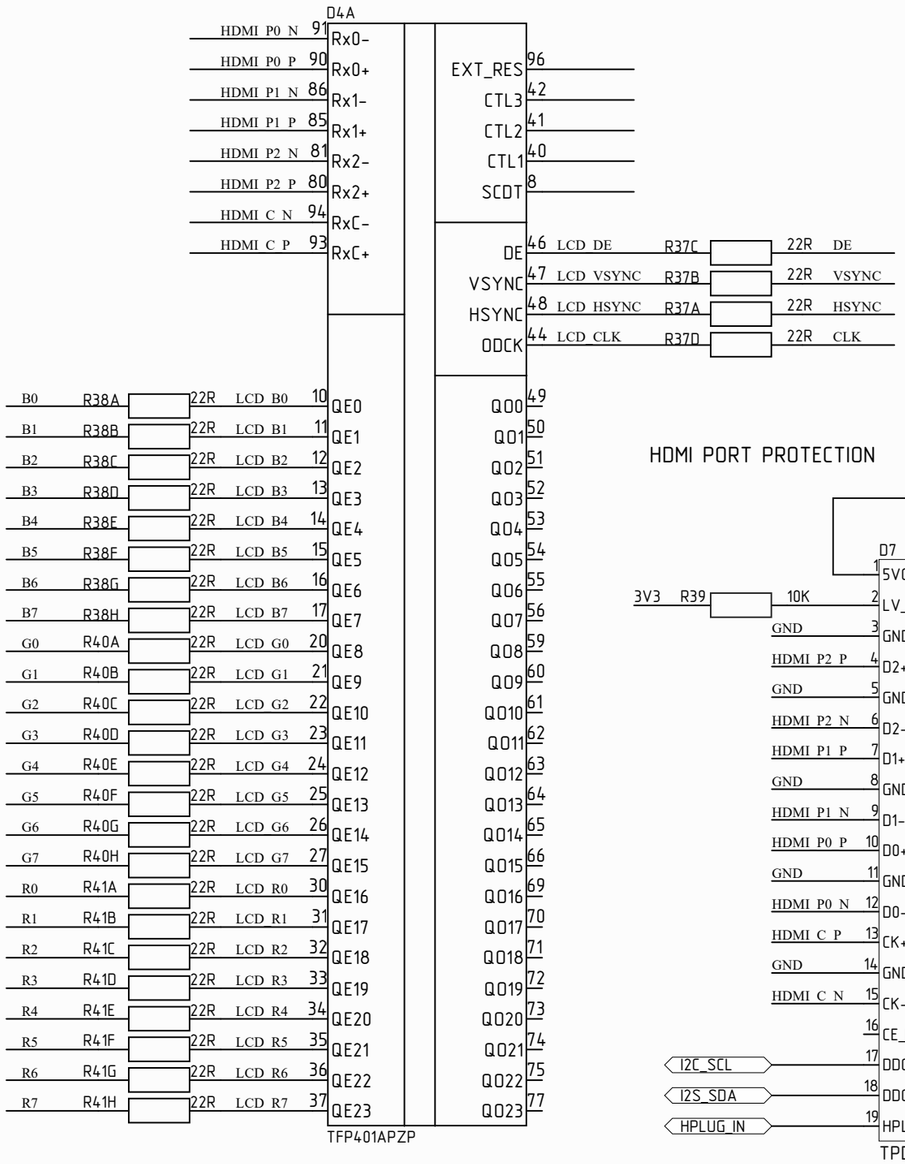

HDMI PORT PROTECTION

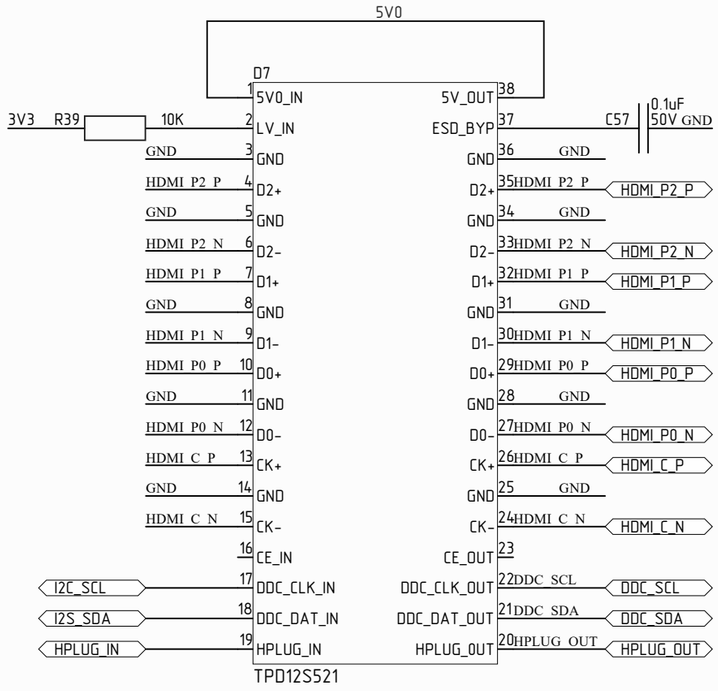

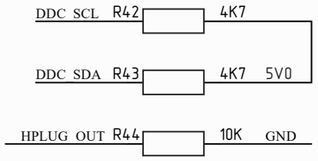

RGB TO LVDS CONVERTER

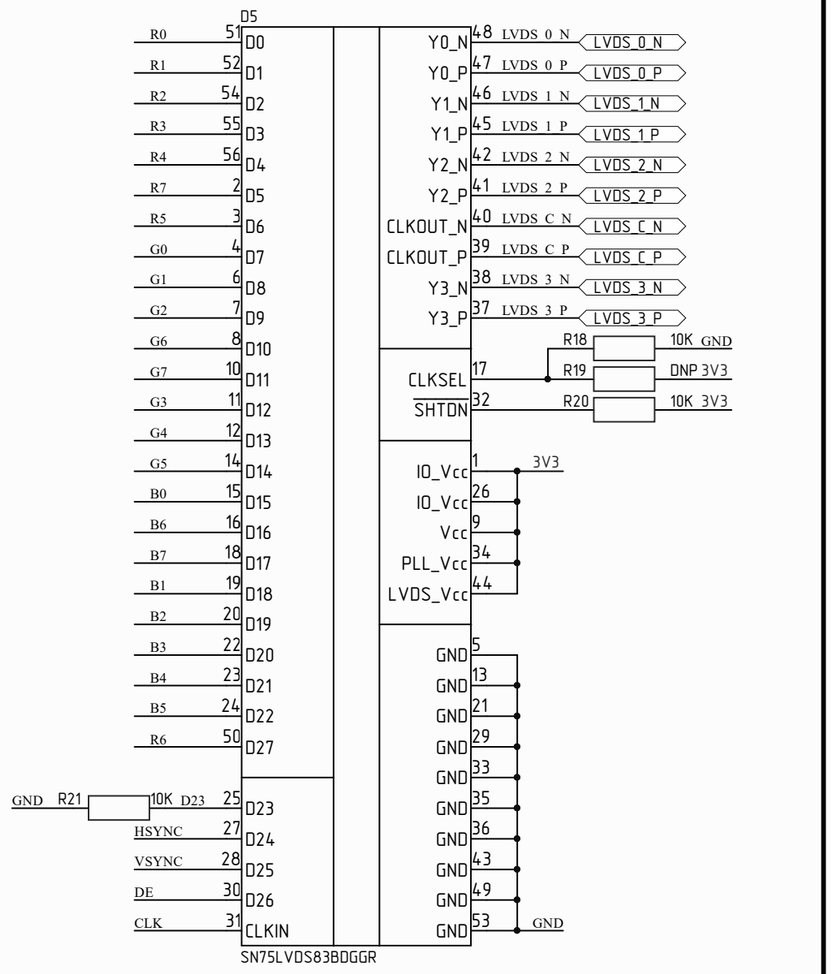

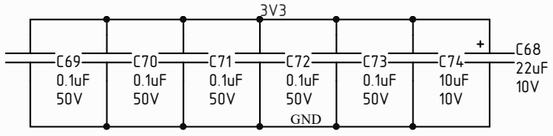

7<	8AB	! 4>:C<	>4?	0B0	.123456.001 -3

8AB
4

>4? 8 40B0
=2! 4C1:;
70< 8=2!
>4?. 8 40B0
=2! ?>4:;

HDMI CONNECTOR

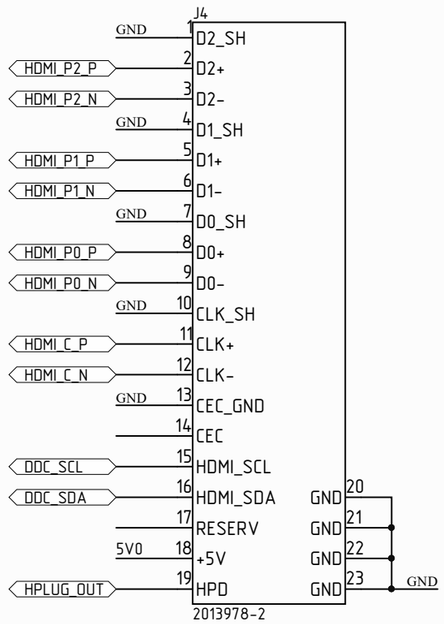

LVDS CONNECTOR

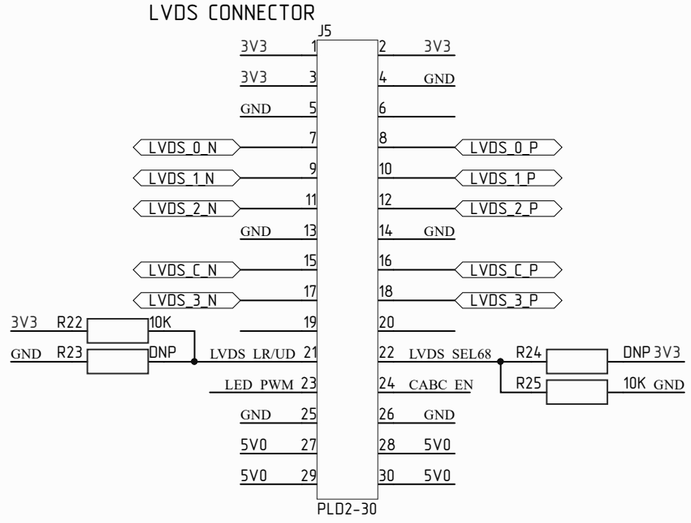

BACKLIGHT CONNECTOR

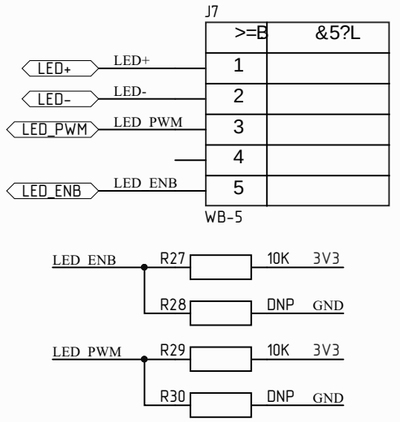

EJ101A-01F

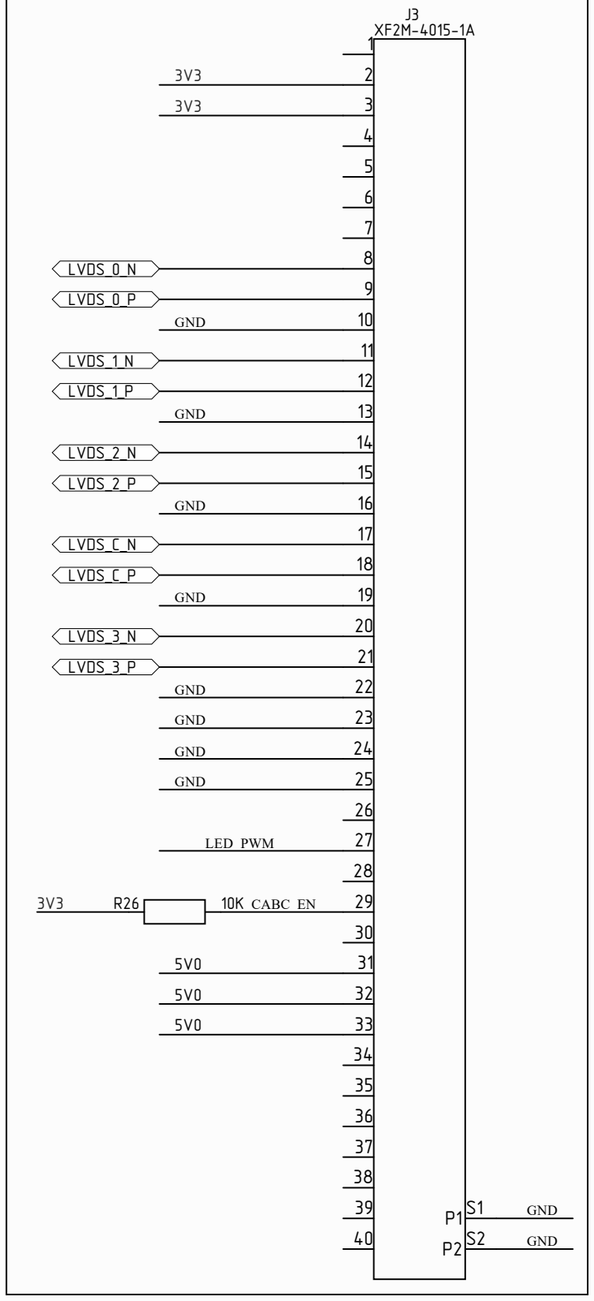

LCD BACKLIGHT

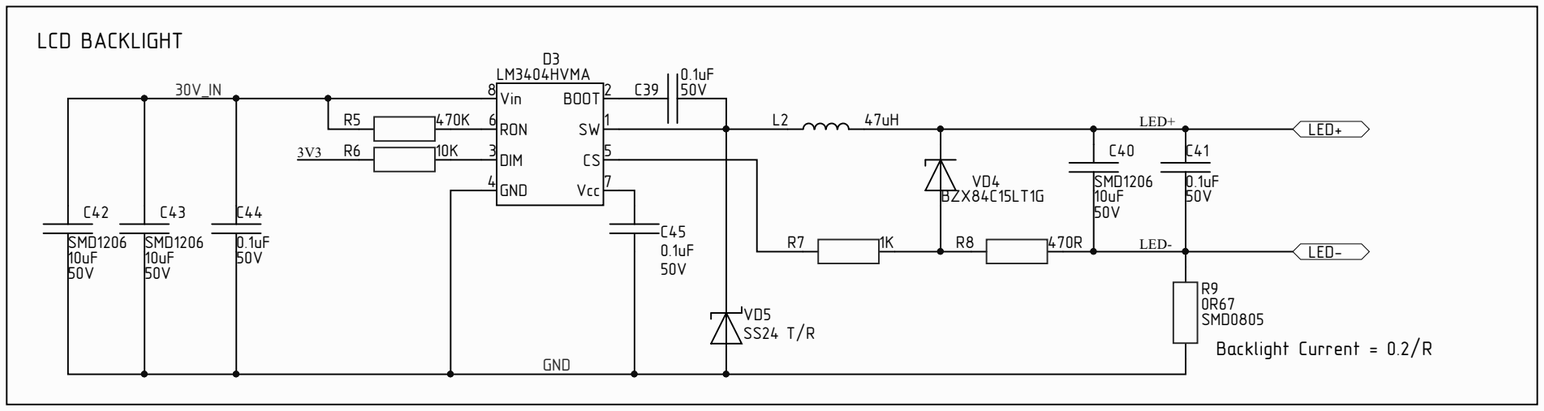

30V_IN 30V_IN
3V3 3V3
GND GND
5V0 5V0

					.123456.001 -3	8AB
7<	8AB	! 4>:C<	>4?	0B0		5

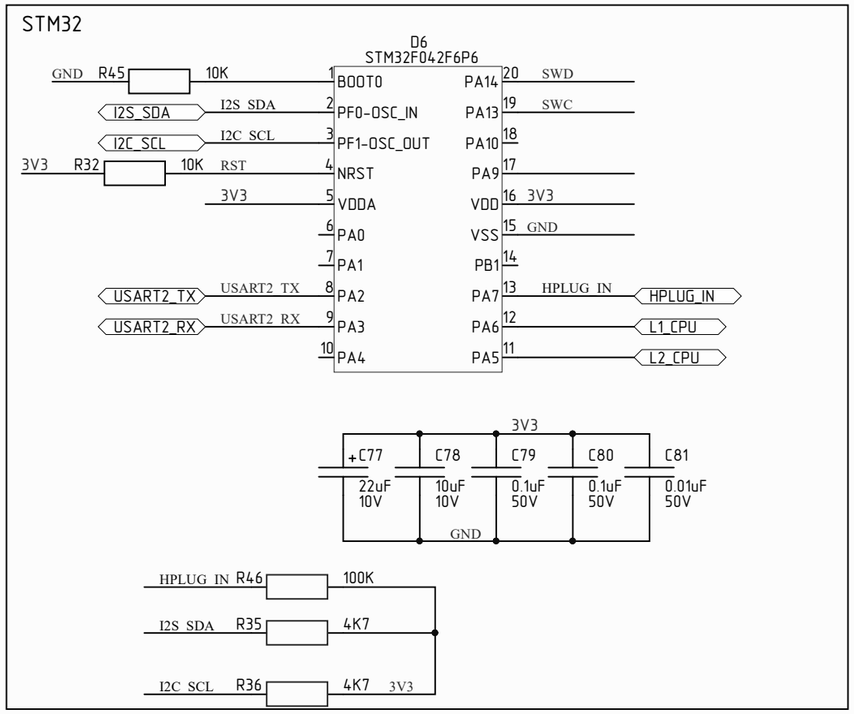

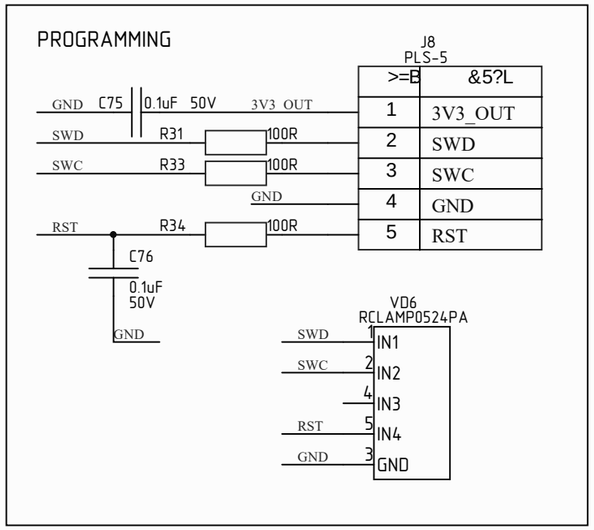

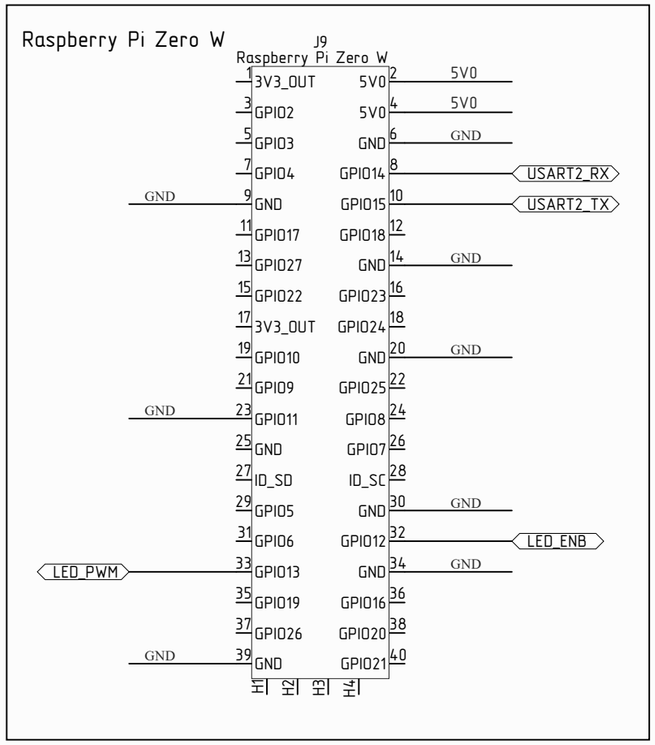

3V3 3V3
5V0 5V0
GND GND

7<	8AB	! 4>:C<	>4?	0B0	.123456.001 -3	8AB 6