中景园电子0.96寸OLED显示屏模块原理图

淘宝地址：http://shop73023976.taobao.com/?spm=a1z10.1.0.0.byBTLt#

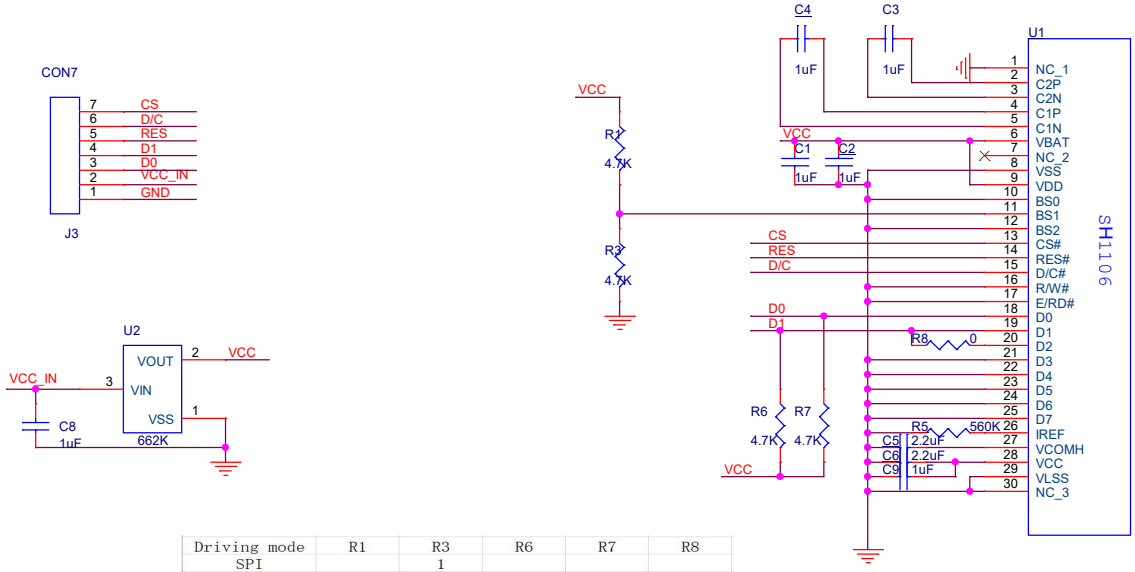

Driving mode	R1	R3	R6	R7	R8
SPI		1			
IIC	1		1	1	1

Title	0.96" 128*64单色OLED驱动板	
Size B	Document Number <Doc>	Rev V 1.0
Date: Wednesday, June 24, 2020	Sheet 1 of 1	