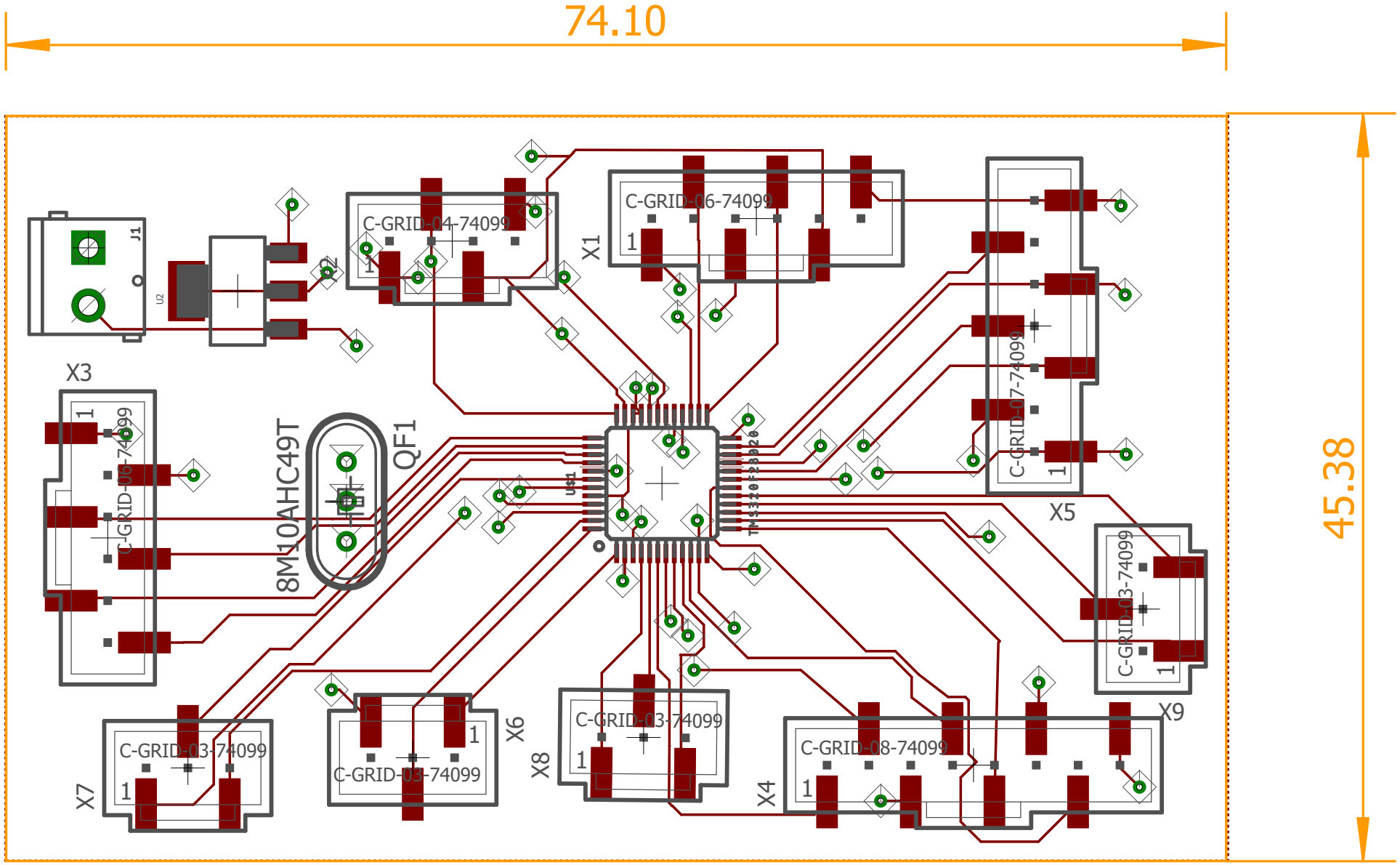
74.10
45.38
J1
U2
Q1
C-GRID-04-74099
X1
C-GRID-06-74099
C-GRID-07-74099
X5
X3
C-GRID-06-74099
8M10AHC49T
QF1
U$1
TMS320F28020
C-GRID-03-74099
X9
C-GRID-03-74099
X7
C-GRID-03-74099
X6
C-GRID-03-74099
X8
C-GRID-08-74099
X4