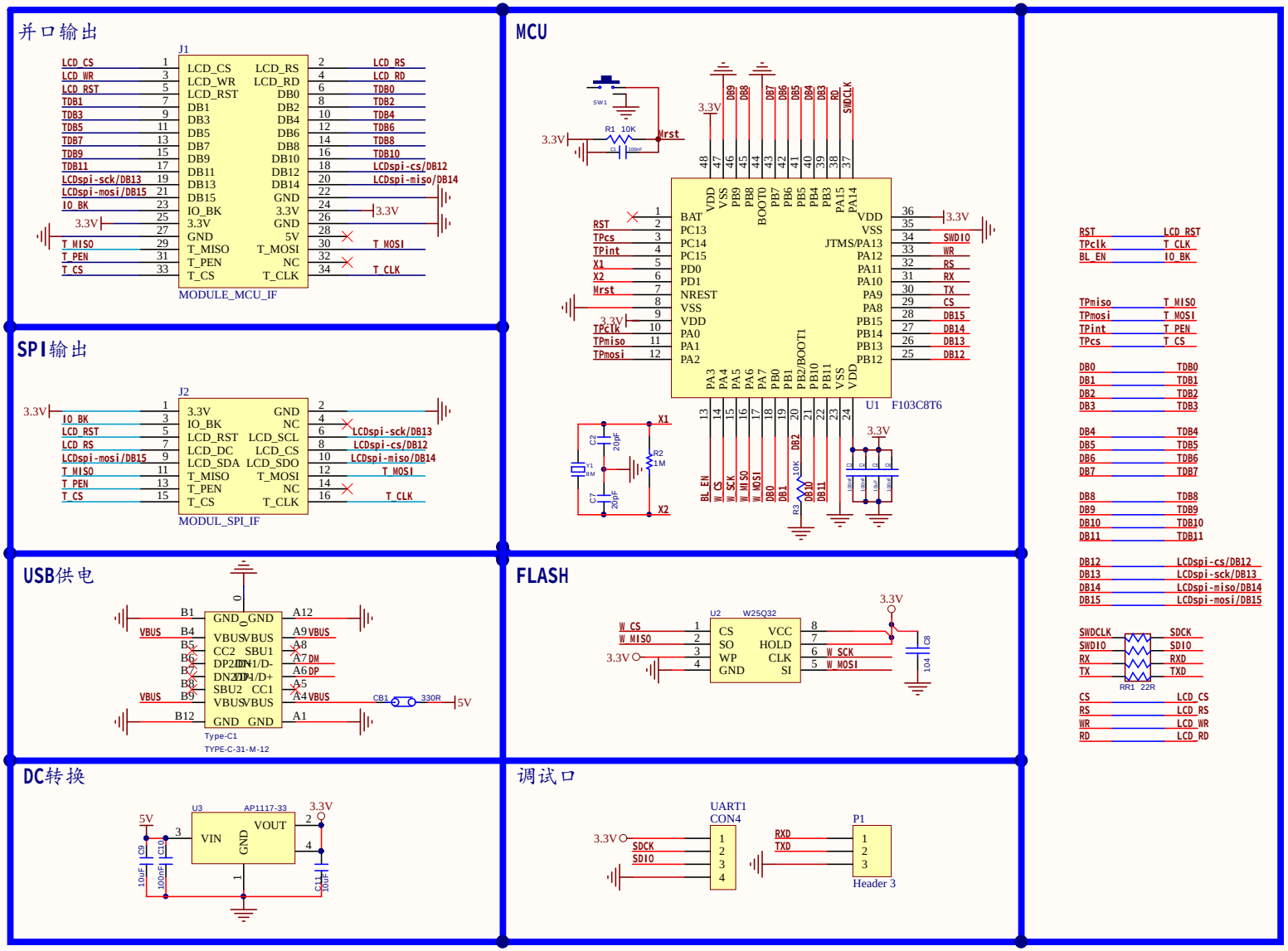

Title		
Size C	Number	Revision
Date: 2023/8/17		Sheet of
File: G:\2020PRJ\..\ETmcu.SCH		Drawn By:

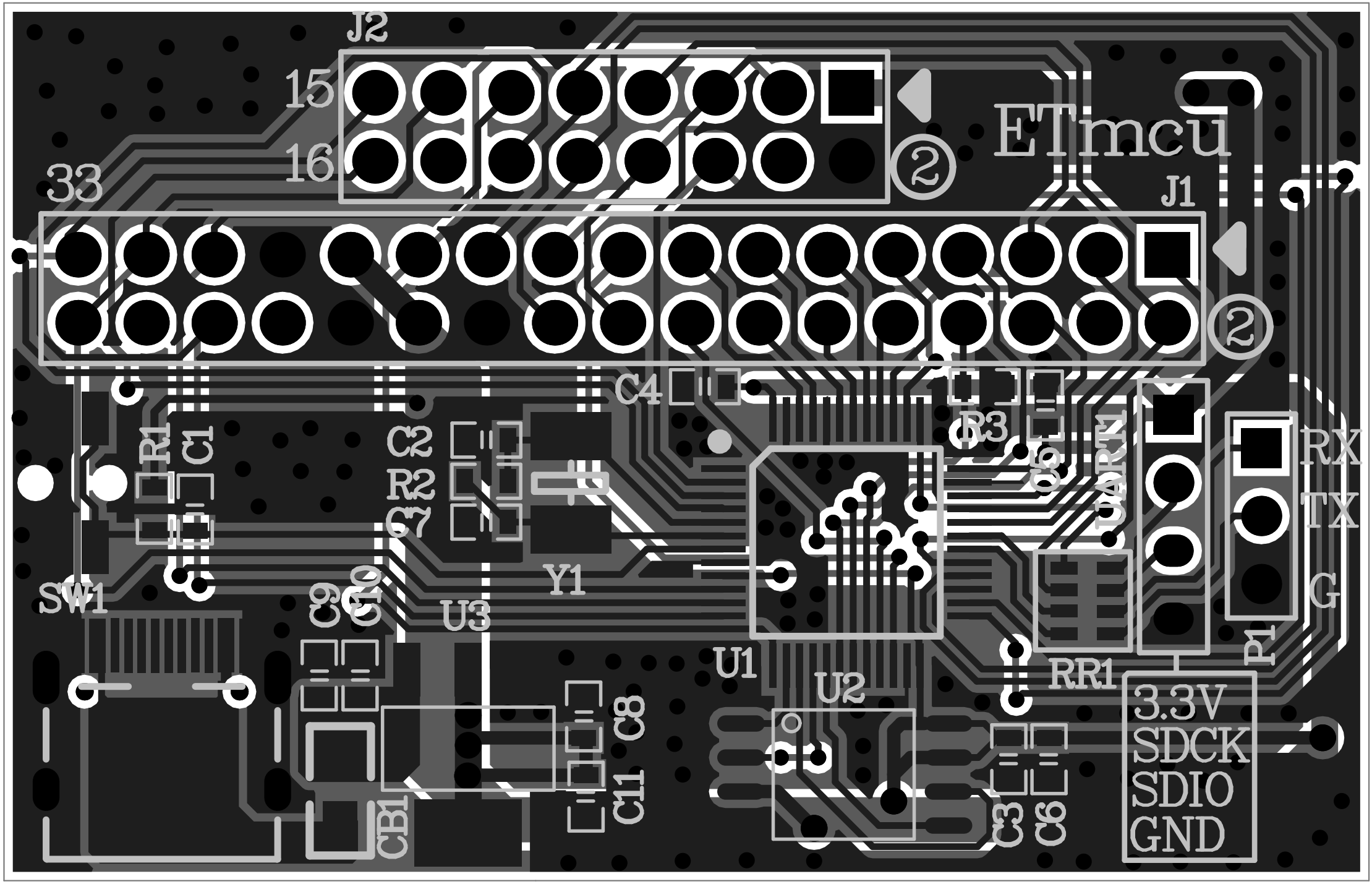
J2
15
16
33
ETmcu
J1
C4
R3
C2
R2
C7
R1
C1
Y1
U1
U2
U3
SW1
C9
C10
C8
C11
CB1
C3
C6
RR1
P1
RX
TX
G
3.3V
SDCK
SDIO
GND