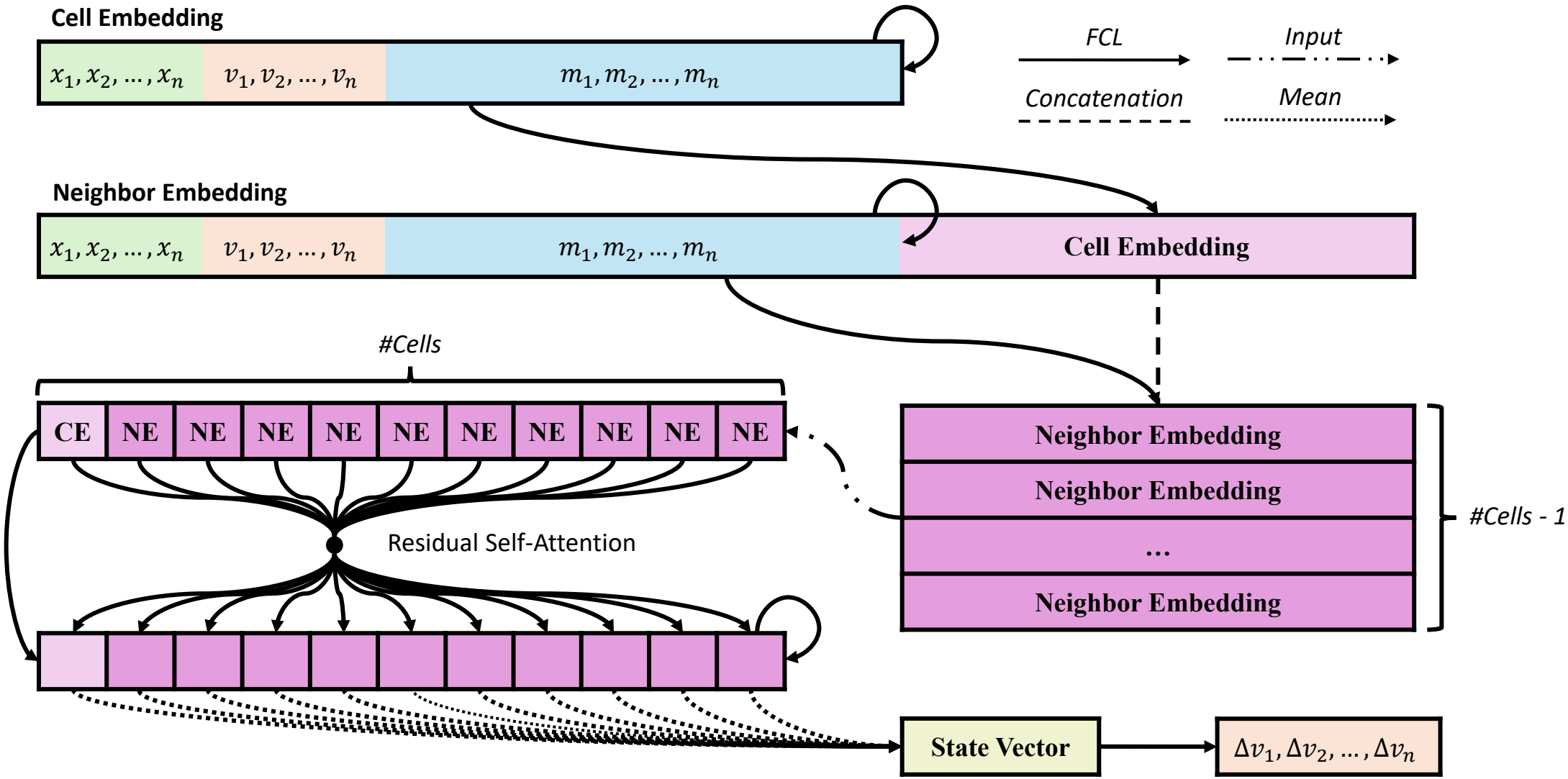
Cell Embedding
$x_1, x_2, \dots, x_n$
$v_1, v_2, \dots, v_n$
$m_1, m_2, \dots, m_n$
FCL
Input
Concatenation
Mean
Neighbor Embedding
$x_1, x_2, \dots, x_n$
$v_1, v_2, \dots, v_n$
$m_1, m_2, \dots, m_n$
Cell Embedding
#Cells
CE
NE
Residual Self-Attention
Neighbor Embedding
Neighbor Embedding
...
Neighbor Embedding
#Cells - 1
State Vector
$\Delta v_1, \Delta v_2, \dots, \Delta v_n$