REVISIONS			
REV.	DESCRIPTION	DATE	APRVD.
A	RELEASED FOR PROTOTYPE	2018-08-03	JSK
B	VARIOUS UPDATES; RELEASED FOR PROTOTYPE	2018-08-15	JSK
C	ADDED NOTE 8; RELEASED FOR PRODUCTION	2018-09-10	JSK
D	REDUCED JOGGLE ANGLE TO 20 DEGREES; SHORTENED BASE FLANGE BY 1 mm	2018-09-26	JSK
E	MODIFIED NOTE 8; SPECIFIED APPLICABLE DIMENSIONS; ADDED HOLE TYPE CALLOUTS	2018-10-01	JSK

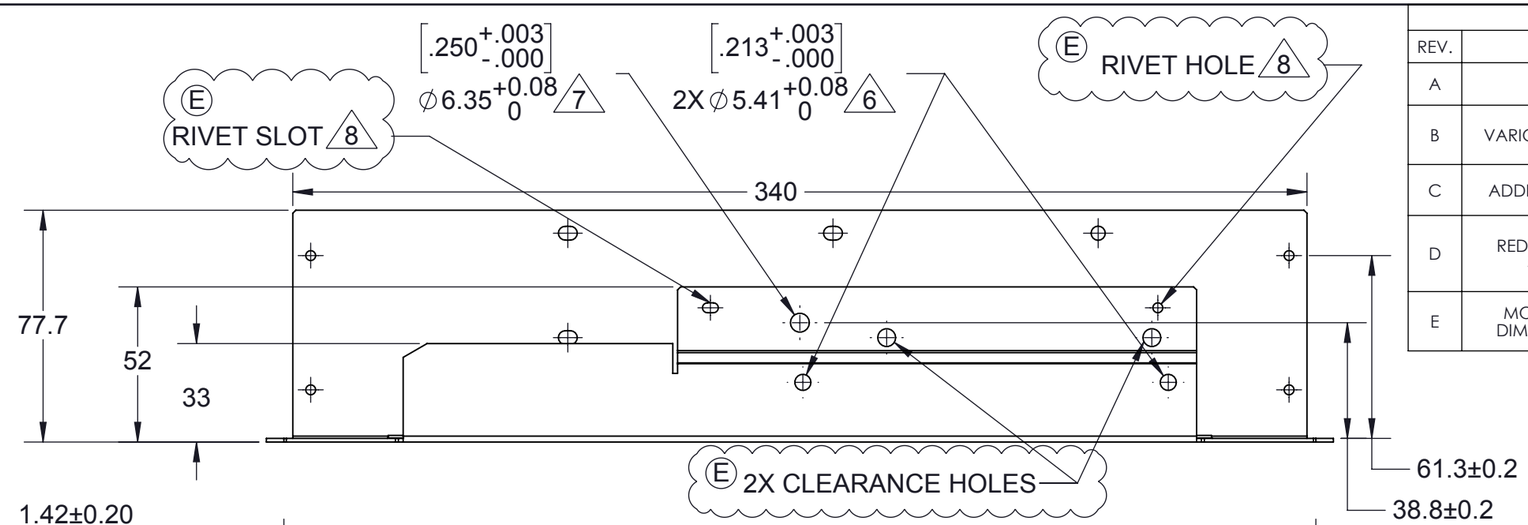

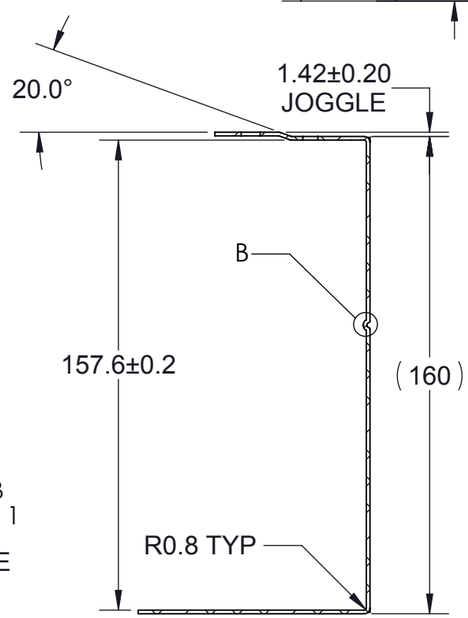

SECTION A-A

DETAIL B
SCALE 4 : 1

GROOVE

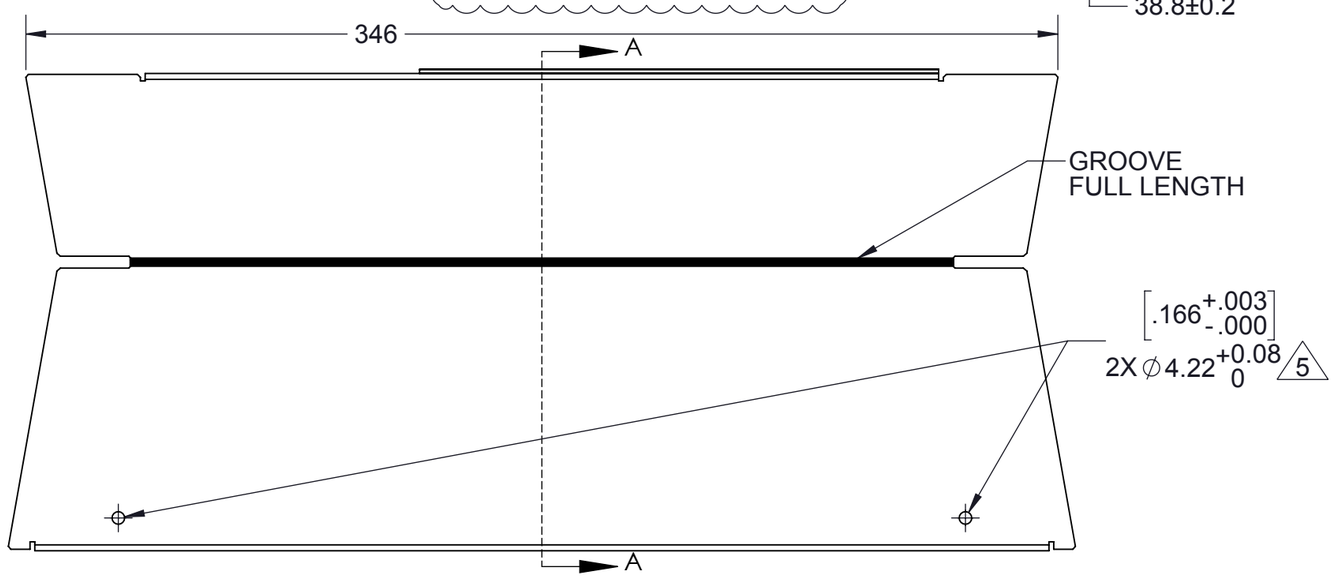

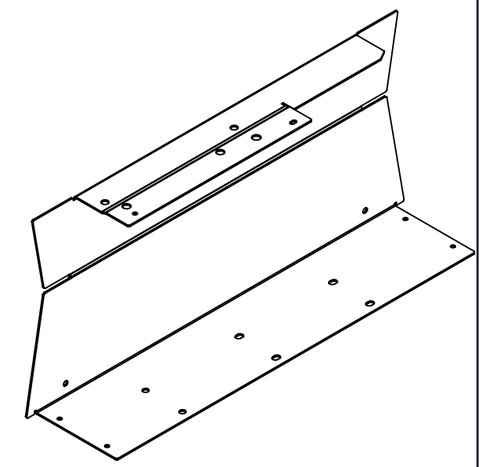

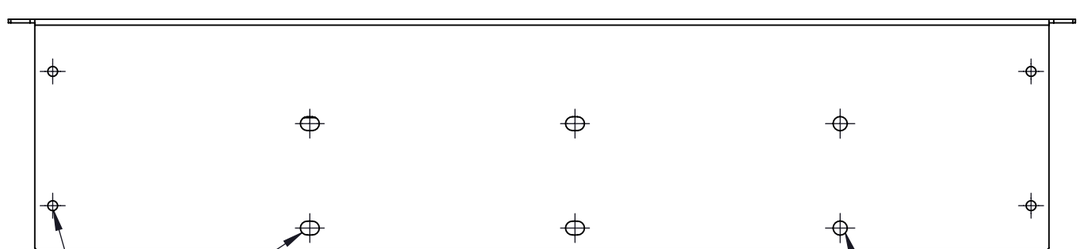

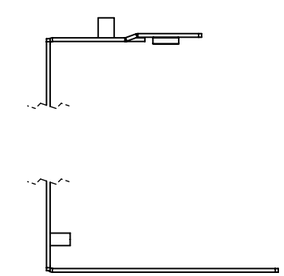

ASSEMBLY DIRECTIONS FOR
SELF-CLINCHING FASTENERS

E 4X CARD GUIDE SLOTS 8

4X RIVET HOLES 8

2X CARD GUIDE HOLES 8

NOTES:

1. CAD MODEL IS TO BE THE MASTER REFERENCE; REFER TO CAD MODEL FOR REMAINING DIMENSIONS
2. BREAK ALL BURRS; NO SHARP EDGES SHALL REMAIN AFTER POWDER COAT IS APPLIED, R 0.1 MIN
3. MATERIAL: 18 GAUGE STEEL, GALVANNEAL
4. FINISH: POWDER COAT, RAL 9005, MATTE (SHERWIN WILLIAMS EBS1-01715, TF BLACK)
5. QTY 2X #4-40 x 5/16" SELF-CLINCHING BLIND STANDOFFS; PEM BRAND BSO-440-10 IS PREFERRED; EQUIVALENTS ARE ACCEPTABLE WITH VALIDATION; THREAD MASKING NOT REQUIRED PRIOR TO POWDER COAT
6. QTY 2X #4-40 x 5/16" SELF-CLINCHING STANDOFFS; PEM BRAND SO-6440-10 IS PREFERRED; EQUIVALENTS ARE ACCEPTABLE WITH VALIDATION; THREADS SHALL BE MASKED PRIOR TO POWDER COAT
7. #10-32 SELF-CLINCHING NUT, PEM BRAND IS PREFERRED; EQUIVALENTS ARE ACCEPTABLE WITH VALIDATION; THREADS SHALL BE MASKED PRIOR TO POWDER COAT
8. INDICATED DIMENSIONS SHALL APPLY AFTER COATING; ALL OTHER DIMENSIONS SHALL APPLY BEFORE COATING (E)

PROPRIETARY AND CONFIDENTIAL:

THE INFORMATION CONTAINED IN THIS DRAWING IS THE SOLE PROPERTY OF IDEAZ USA. ANY REPRODUCTION IN PART OR AS A WHOLE WITHOUT THE WRITTEN PERMISSION OF IDEAZ USA IS PROHIBITED.

IDEAZ

UNLESS OTHERWISE SPECIFIED:
DIMENSIONS ARE IN MILLIMETERS
ALL UNTOLERANCED DIMENSIONS ARE BASIC
TOLERANCES: FRACTIONAL ±0.75
ANGULAR ±0.5°
LINEAR .X ±0.75
.XX ±0.25
.XXX ±0.125
FINISH Ra 12.5
INTERPRET GD&T PER ASME Y14.5M-1994

DO NOT SCALE DRAWING

MATERIAL: SEE NOTES	DESCRIPTION: W2 CHASSIS LEFT		
FINISH: SEE NOTES	PART NO: 1735304		PART REV. E
PROCESS:	DRAWN BY:	DRAWN DATE:	
SUPPLIER PART NO:	SIZE: B	SCALE: 1:2	SHEET: 1 OF 1