DO NOT SCALE

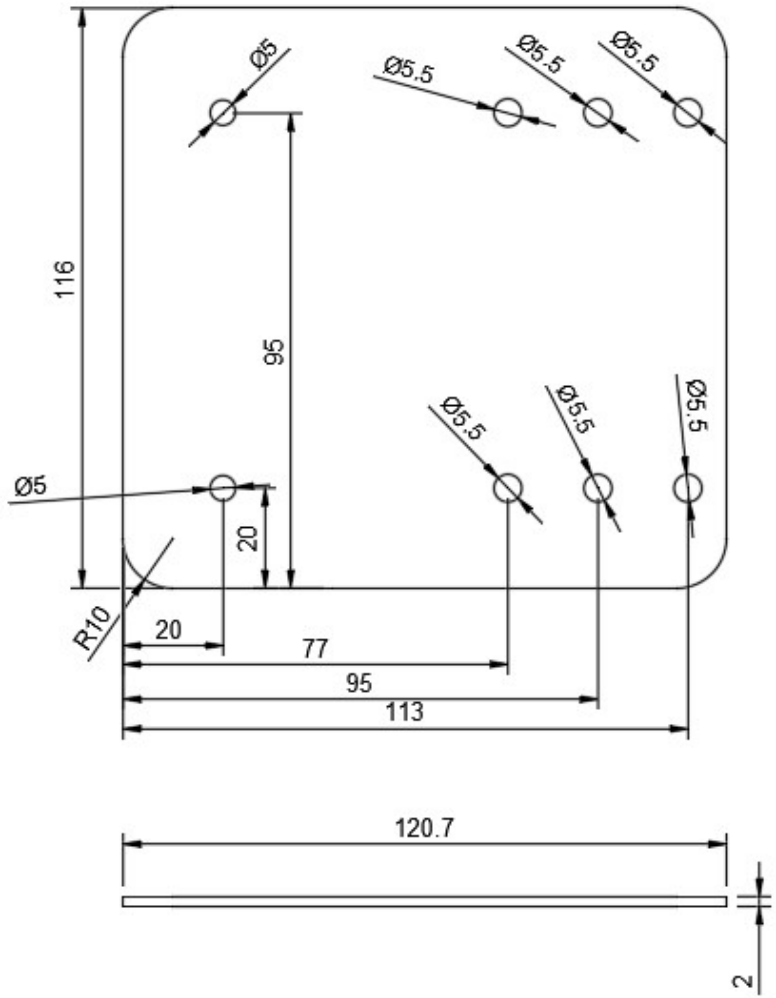

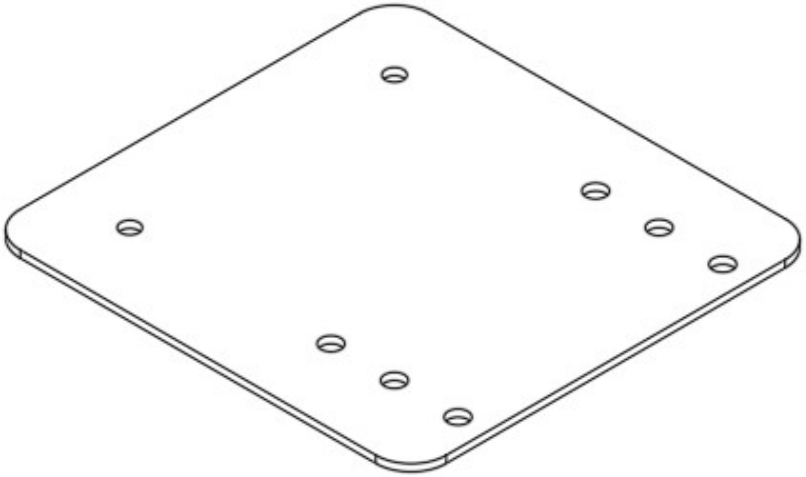

REMOVE ALL BURRS AND SHARP EDGES

ALL DIMENSIONS IN MM

TOLERANCES UNLESS OTHERWISE STATED WHOLE NUMBERS ±0.25	DRAWING TO BS 8888	DRAWN BY GROUP 4	DATE 11/2/2023
	THIRD ANGLE PROJECTION	SCALE 1:2	
MANCHESTER 1824 The University of Manchester		CUSTOM NUC MOUNT PLATE	
		SIZE A3	DRAWING NO. 1 OUT OF 1