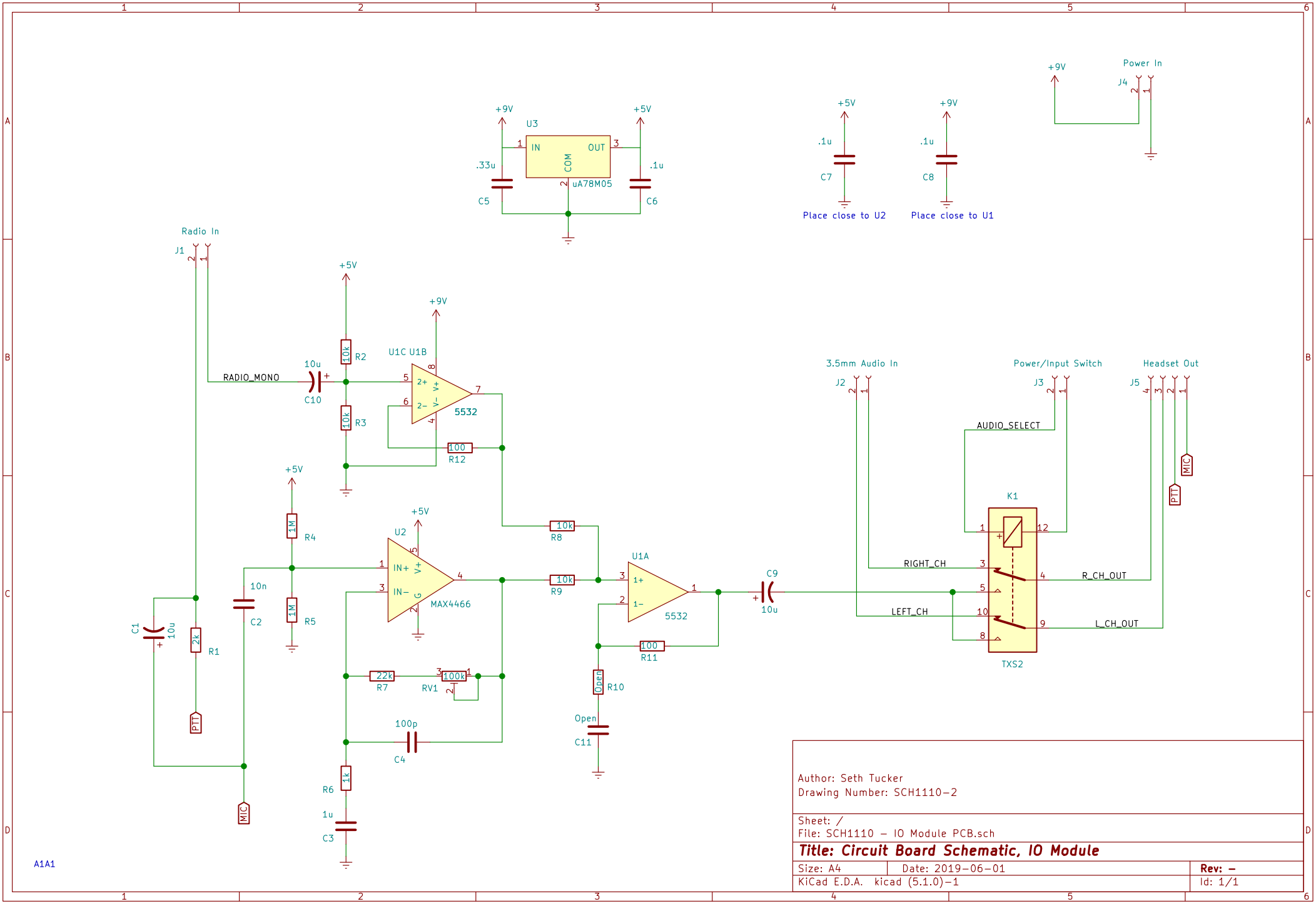

Author: Seth Tucker
Drawing Number: SCH1110-2

Sheet: /
File: SCH1110 - IO Module PCB.sch

Title: Circuit Board Schematic, IO Module

Size: A4	Date: 2019-06-01	**Rev: -**
KiCad E.D.A. kicad (5.1.0)-1		Id: 1/1