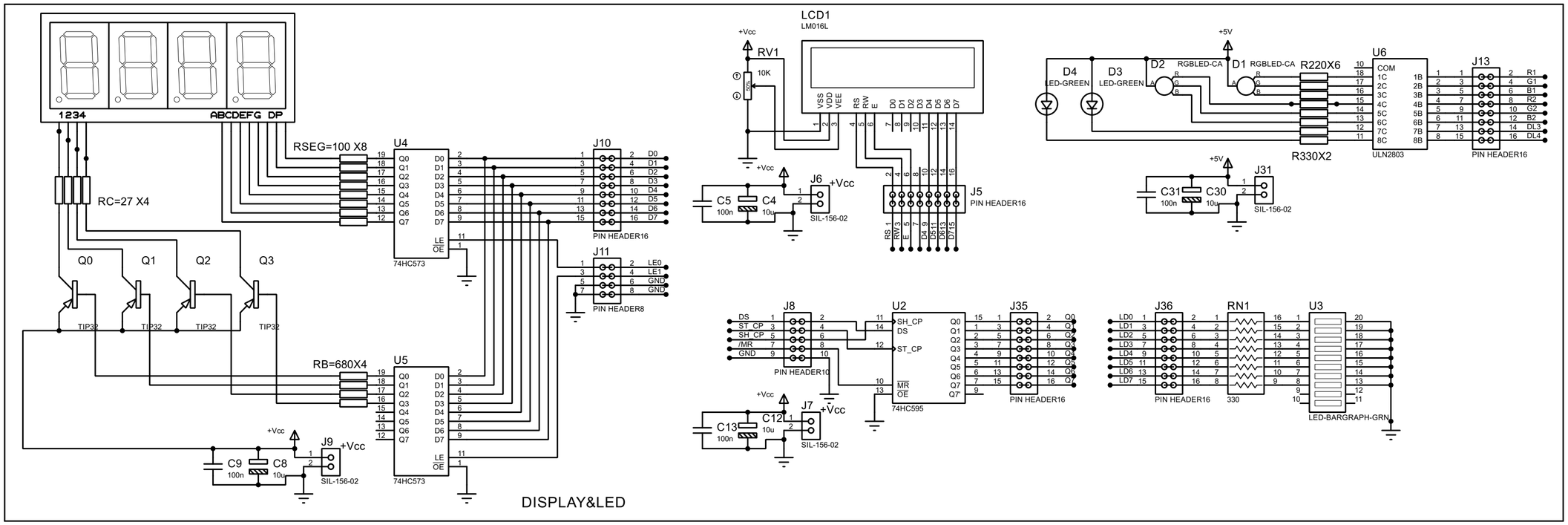
1234
ABCDEFG DP
RSEG=100 X8
RC=27 X4
RB=680X4
U4
U5
74HC573
J10
J11
PIN HEADER16
PIN HEADER8
Q0
Q1
Q2
Q3
TIP32
C9
100n
C8
10u
J9
SIL-156-02
LCD1
LM016L
RV1
10K
C5
100n
C4
10u
J6
J5
PIN HEADER16
D4
LED-GREEN
D3
LED-GREEN
D2
RGBLED-CA
D1
RGBLED-CA
R220X6
R330X2
U6
ULN2803
J13
PIN HEADER16
C31
100n
C30
10u
J31
SIL-156-02
J8
PIN HEADER10
U2
74HC595
J35
PIN HEADER16
C13
100n
C12
10u
J7
SIL-156-02
J36
PIN HEADER16
RN1
330
U3
LED-BARGRAPH-GRN
DISPLAY&LED

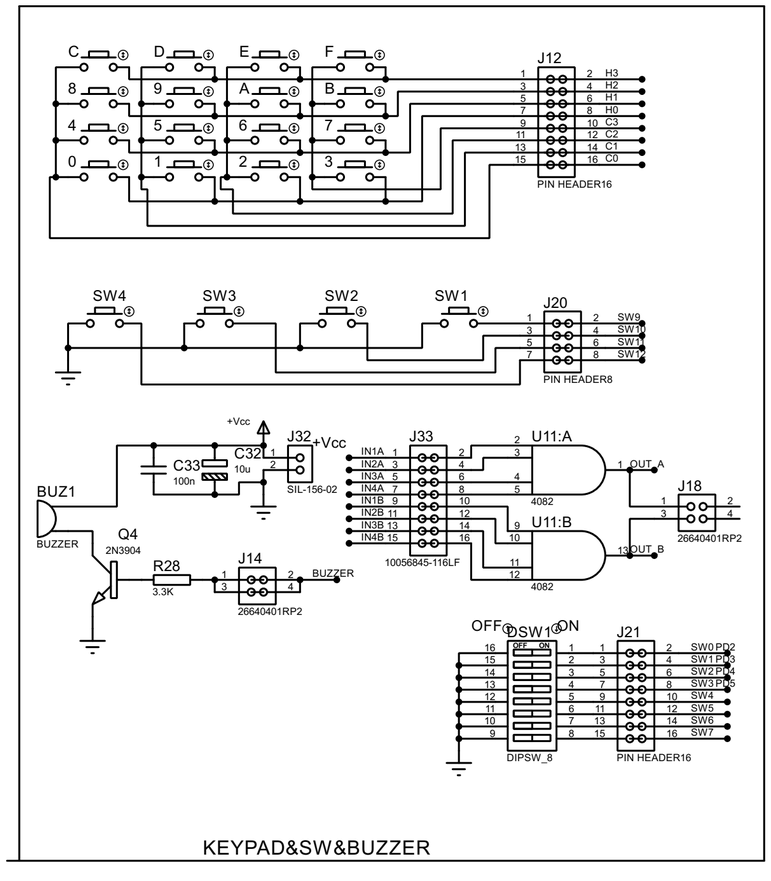
J12
PIN HEADER16
SW4
SW3
SW2
SW1
J20
PIN HEADER8
J32
SIL-156-02
C32
10u
C33
100n
BUZ1
BUZZER
Q4
2N3904
R28
3.3K
J14
26640401RP2
J33
10056845-116LF
U11:A
U11:B
4082
J18
26640401RP2
DSW1
DIPSW_8
J21
PIN HEADER16
KEYPAD&SW&BUZZER

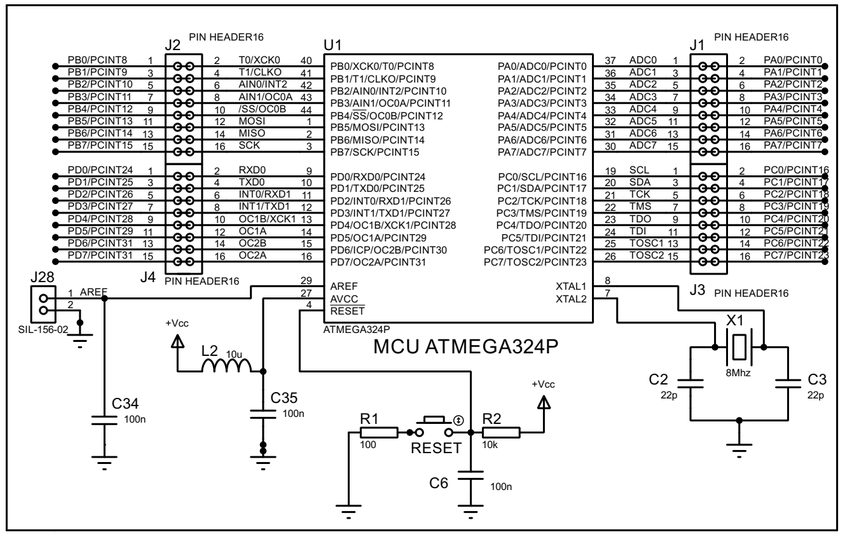
J2
PIN HEADER16
U1
J1
PIN HEADER16
J4
PIN HEADER16
J3
PIN HEADER16
J28
SIL-156-02
ATMEGA324P
L2
10u
C35
100n
C34
100n
R1
100
RESET
R2
10k
C6
100n
X1
8Mhz
C2
22p
C3
22p
MCU ATMEGA324P

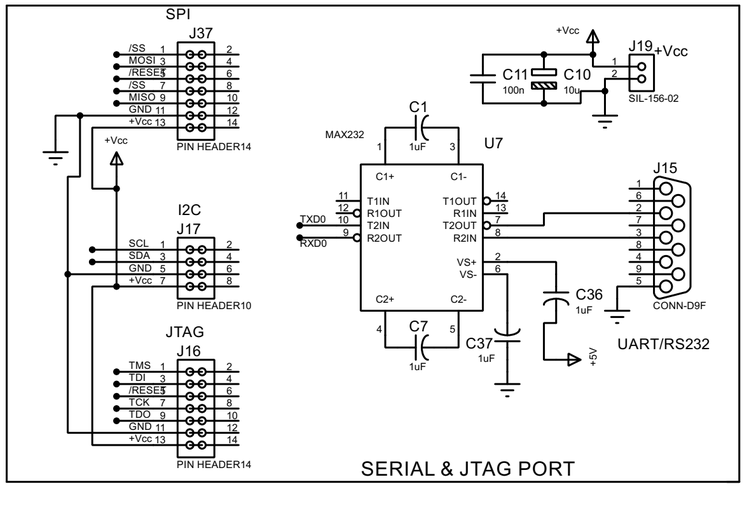
SPI
J37
PIN HEADER14
I2C
J17
PIN HEADER10
JTAG
J16
PIN HEADER14
J19
SIL-156-02
C11
100n
C10
10u
MAX232
U7
C1
1uF
C7
1uF
C37
1uF
C36
1uF
J15
CONN-D9F
UART/RS232
SERIAL & JTAG PORT

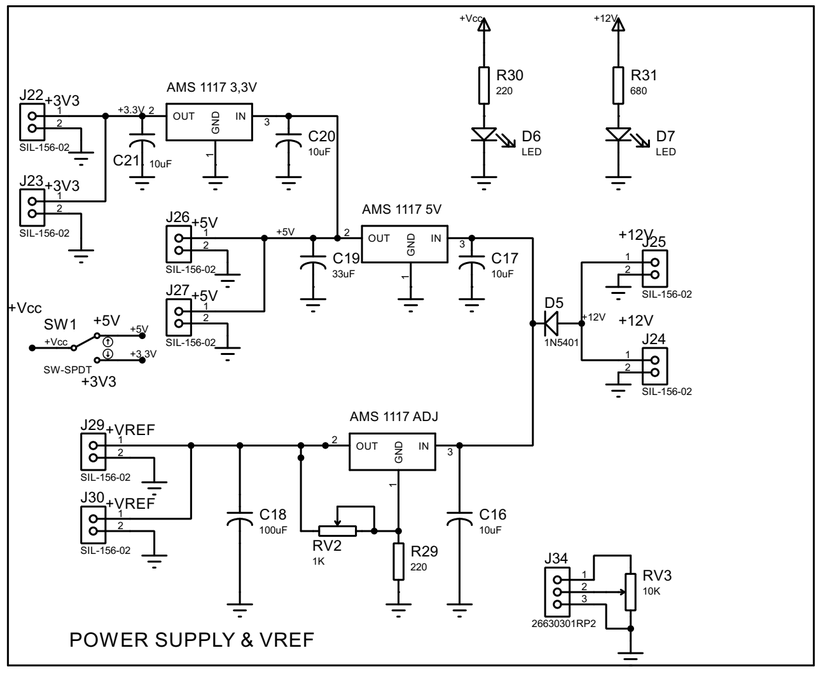
J22
+3V3
J23
+3V3
SIL-156-02
AMS 1117 3,3V
C21
10uF
C20
10uF
R30
220
D6
LED
R31
680
D7
LED
J26
+5V
J27
+5V
AMS 1117 5V
C19
33uF
C17
10uF
SW1
SW-SPDT
D5
1N5401
J25
J24
J29
+VREF
J30
+VREF
AMS 1117 ADJ
C18
100uF
RV2
1K
R29
220
C16
10uF
J34
26630301RP2
RV3
10K
POWER SUPPLY & VREF