UNIT-IV

Power flow Analysis in AC/DC systems

Power flow Analysis is essential for planning, designing, & operation of power systems.

It is basically simulation of the system in steady state & determines the operating point which is later used for initializing variables in transient & dynamic system simulation.

The Gauss siedel method has given way to the use of newton's method which results in convergence to a solution.

The computations are further simplified using fast decoupled method.

V.Imp

** Modelling of DC link:- network converter

DC Network

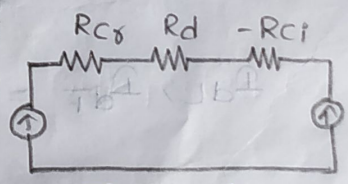

The DC Network consisting of DC links, smoothing reactors & converters can be viewed as a resistive network excited by current (or) V/g sources in steady state.

Depending on series or shunt connection of converters, it may be appropriate to consider loop resistance (or) nodal conductance matrix.

The converters are not ideal sources, but are described by converter & controller equations.

In general the elements of DC network can be separated into tree, branches & links.

The converters can be divided into either tree, branches (or) links.

The equations describing the DC network are

$$-[g]\,V_g = i_g \quad \text{—(1)} \qquad V = IR \quad R = \frac{1}{G}$$

$$i_g = -B_{Lg}\, I_{dL} \quad \text{—(2)} \qquad V = I(R + jX)$$

$$i_{dT} = -B_{LT}\, I_{dL} \quad \text{—(3)} \qquad \frac{1}{X} = B$$

$$V_{dL} = B_{Lg}^{t}\, V_g + B_{LT}^{t}\, V_{dT} \qquad V_d = V_{dg}\cos\alpha - R\, I_d$$

$$= B_{Lg}^{t}\,(g)^{-1}\, B_{Lg}\, I_{dL} + B_{LT}^{t}\, V_{dT} \quad \text{—(4)}$$

where $[g]$ - matrix of element conductances (diagonal)

V_g, i_g - V/g & current vectors corresponding to conductances.

I_{dL}, I_{dT} - currents through the converters that are included in the links & tree respectively.

B_{Lg}, B_{CT} - components of fundamental cutset matrix.

V_{dL}, V_{dT} - counter V/g's.

If the converters are all connected in parallel and there are no ground connections.

Equations (1) to (4) can be written in the nodal reference frame as given below

$$[G]\,\Delta V_d = [S]\,I_d \quad \text{—} (5)$$

$$S_j V_{dj} = \Delta V_{dj} + V_{dN} S_N \quad \text{—} (6)$$

$$S_N I_{dN} = -\sum_{j=1}^{N} S_j I_{dj} \quad \text{—} (7)$$

$[G] \rightarrow (n-1)\times(n-1)$

nodal conductance matrix.

V_{dj} = V/g across j^{th} converter w.r.t ground

V_{dN}, I_{dN} = V/g & currents in last (N^{th}) converter.

$[S]$ = Diagonal matrix with elements of S_j.

S_j – '+1' → Rectifier
– '−1' → Inverter.

DC converter:-

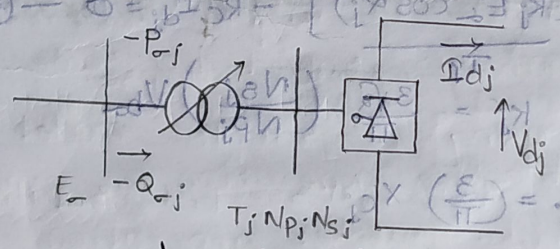

Schematic diagram of converter

It is assumed that 'N' converters can be put into 'm' groups such that for all the converters in the group, the AC converter bus is identical.

Normally all the converters in a station can be grouped together.

The number of converters in i^{th} group is n_i. It is obvious that

$$\sum_{i=1}^{m} n_i = N \quad \text{—} (8)$$

The voltage equation for the converter j in group 'i' is

$$V_{dj} = \left(\frac{3\sqrt{2}}{\pi}\right)\left(\frac{N_{sj}}{N_{pj}}\right)\left(\frac{E_\sigma}{T_j}\right) V_{b\sigma} \cos\alpha_j - \left(\frac{3}{\pi}\right) X_{cj} I_{dj} \quad -(2)$$

where — $V_{b\sigma}$ = base voltage at the converter bus 'σ'.

T_j = Off nominal tap ratio of the t/f.

E_σ = pu ac voltage at the converter bus.

N_{pj}, N_{sj} = Nominal turns of the primary & secondary winding.

X_{cj} = leakage reactance of T/f refer to secondary.

All the ac quantities are represented in pu
" " DC " " " " volts/Ampere.

The equation can be written as

$$V_{dj} - \left[\frac{(K_j E_\sigma \cos\alpha_j)}{T_j}\right] - R_{cj} I_{dj} = 0 \quad -(2)$$

where $K_j = \frac{3\sqrt{2}}{\pi}\left(\frac{N_{sj}}{N_{pj}}\right) V_{b\sigma}$

$$R_{cj} = \left(\frac{3}{\pi}\right) X_{cj}$$

The power & reactive power injections into the AC bus 'σ' are

$$P_\sigma = -\sum_{j=1}^{n_\sigma} V_{dj} I_{dj}$$

$$Q_\sigma = -\sum_{j=1}^{n_\sigma} V_{dj} I_{dj} \tan\phi_j$$

It is to be noted that both V_{dj} & $\tan\phi_j$ are negative.

This results in P_σ being positive while Q_σ is negative.

The extinction angle is obtained from

$$I_d = \left[\frac{K_j E_\sigma}{T_j R_{cj}}\right] [\cos\alpha_j + \cos\gamma_j]$$

converter j
angle of

21/8/15

Imp

Solution of AC-DC power flow:

The solution methodology for AC-DC power-flow can be classified as:

(i) Simultaneous (or) unified method.

(ii) Sequential (or) Alternating method.

In the first approach, the AC & DC quantities are solved together.

The simplest implementation of this approach is to consider all the equations (for AC & DC systems) combined into one set of non-linear algebraic equations.

A Jacobian matrix is then constructed & newton's method is used to solve this set of equations.

Flowchart of AC/DC load flow:

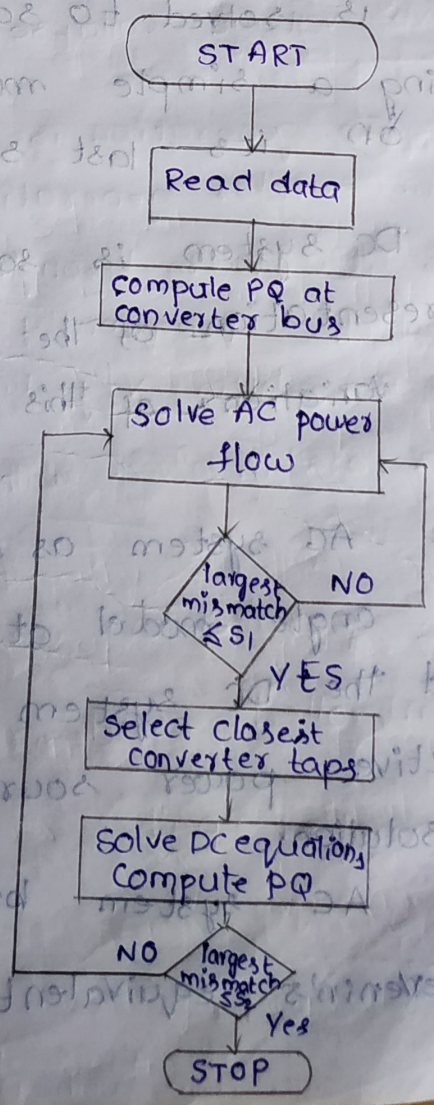

Both Simultaneous & Sequential.

Jacobian matrix is solved by fast decoupled method ~~the~~ for AC system equations solution.

Here Jacobian matrix is approximated at each step the following equations are solved.

$$\begin{bmatrix} \frac{\Delta P}{\Delta V} \\ \frac{\Delta Q}{\Delta V} \\ \frac{}{\Delta R} \end{bmatrix} = \left[\begin{array}{cc|c} B' & 0 & A' \\ 0 & B'' & A'' \\ \hline 0 & B & A \end{array}\right] \begin{bmatrix} \Delta Q \\ \frac{\Delta V}{\Delta X} \end{bmatrix} \quad \text{--- (1)}$$

Here x is the vector of dependent variables for DC system and ΔR is the vector of mismatches of DC system equations.

4/8/15 Sequential method:

In sequential method, the AC & DC system equations are solved separately & sequentially the AC system is solved to some degree of convergence using a simple model of DC system based on its last solution.

The DC system is solved using a simplified representation of the AC system. There are many variations of this approach as given below:

(i) Represent the AC system as a constant V/q, constant angle model at every converter and the DC system as a constant active (or) reactive power source (or) load during the AC solution.

(ii) Represent the AC system by uncoupled (or) coupled. Thevenin's equivalent model during DC solution.

(iii) Represent DC N/w as a P-Q lead model with a Jacobian term.

(1)

Sequential method has advantage of modulating programming where the ac & dc systems are modelled separately in different program segments.

Generally AC load flow program is written large systems i.e. thousands of buses.

For DC link operating with weak AC system unified method is prefered.

$\boxed{SCR < 3}$ → AC system is weak

$$SCR \rightarrow \text{Short ckt ratio} = \frac{\text{Short ckt level at the converter bus}}{\text{Rated DC power}}$$

water cables - Submarine.

11/9/15

UNIT-V

① 14m (Flow of power in AC systems (7m) Parallel meshed (7m)

In AC power system, if there is insufficient electrical storage, the electrical generation and load must balance at all times.

If generation is less than the load, the voltage & frequency drop & thereby load goes down to equal the generation minus transmission losses. Hence there is only a few percent of self regulation.

If voltage is popped with reactive power support, then the load will go up & consequently frequency will keep dropping & the system will collapse.

-Alternatively, if there is inadequate reactive power, the system can have voltage collapse.

When adequate generation is available, active power flows from surplus generation across to deficit areas & it flows through all parallel paths available which frequently involves extra high voltage and medium v/g lines.

Long distances are involved with generators & loads along the way.

By using parallel (or) meshed paths, the power can be controlled as desired.

Power flow in parallel paths:-

$P = \frac{V^2}{X} \sin\delta$

Short distances

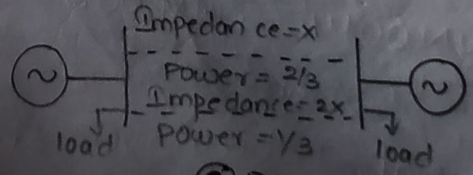

@ Power flow with parallel paths

(b) power flow control in HVDC.

(2)

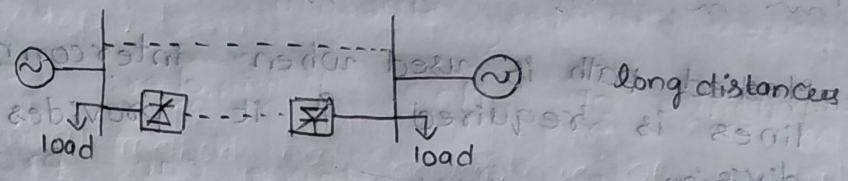

(c) power flow control with variable impedance.

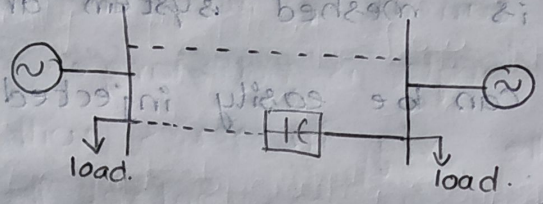

(d) power flow control with variable phase angle.

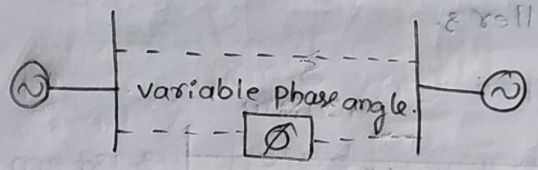

⇒ rarely preferred

- power in AC is given by

$$P = \frac{V^2}{X} \sin\delta$$

parallel path → X & δ

- power can be controlled by varying X and δ if the distance involved is long HVDC transmission is preferred. power can be controlled by current control. meshed path → V, X
- variable impedance is obtained by using capacitor. variable phase angle is obtained by using AVR (Automatic voltage regulator (or) phase angle regulator).
- The controlling parameters in ac are X, V, δ all such ~~par~~ controls are provided by facts devices
- So we are using facts devices in ac transmission
- By using FACTS controllers power can be as desired.

series

9/15

Radial (distribution) line

Flow of power in Meshed paths:-

- Meshed path is used when interconnection of lines is required & it provides power division.

- when overload occurs, inorder to compensate that, meshed system is adopted. The controlling parameters is meshed system are X, δ & V.

So voltage can be easily injected in nested system.

In mesh network any of the line can be overloaded, & line power can be controlled by FACTS controllers.

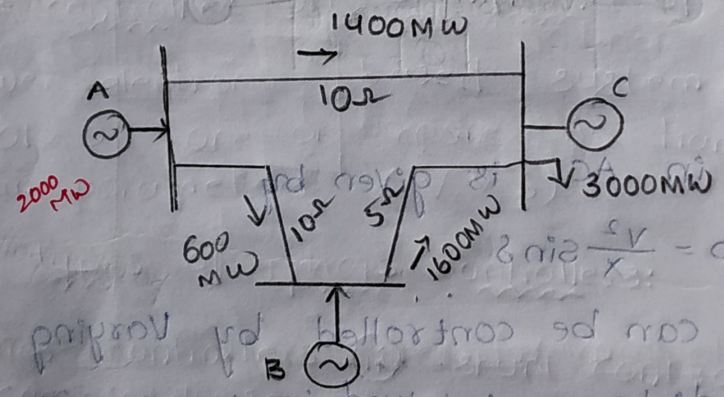

Power flow in a meshed system.

- Suppose lines AB, BC & AC have continuous ratings of 1000MW, 1250MW, 2000MW respectively. Twice those ratings incase of loss of any one of these lines (fault)

AB = 1000MW, BC = 1250MW, AC = 2000MW

If one of the generator is generating 2000MW & other 1000MW a total of 3000MW to be delivered to the load for the impedances shown 3 lines with carry 600 MW, 1400MW

by using FACTS devices. The line BC is overloaded at 1600MW for its continuous rating of 1250MW and therefore generation we have to be decreased at B and increased at A inorder to meet the load without overloading line BC. The capacitor whose reactance is -5V is inserted in one line it reduces the line impedance from 10Ω-5Ω so that power flow to the line AB, BC & AC will be 250 MW, 1250MW & 1750 MW.

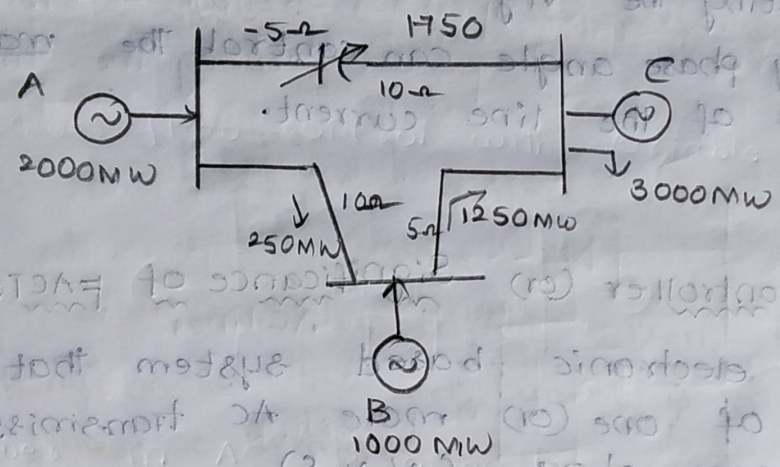

Power flow by using thyristor controlled series capacitor.

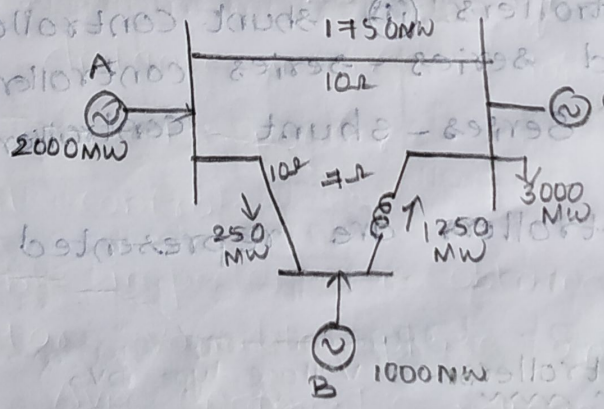

Power flow by using thyristor controlled series reactance

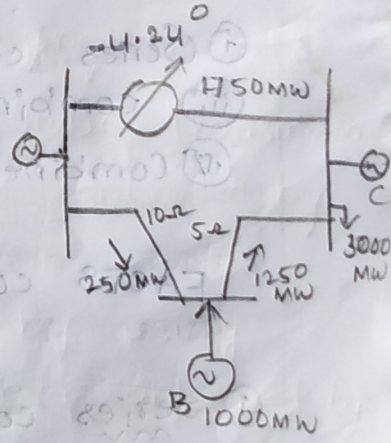

power flow by using thyristor controlled AVR (or) phase angle control.

FACTS (Flexible AC Transmission system):-

Alternating current Transmission system incorporating power electronic based & other static series

controllers to enhance controllability & increase power transfer stability. (Significance to control current control)

* Importance of control parameter:: (Z, δ, V)

(i) control of Impedance can provide current control & active power.

(ii) control of angle phase angle regulator controls the v/g & current & hence the active power when when angle is not large.

(iii) Injecting the v/g in series with the line & with any phase angle can control the magnitude & phase of the line current.

FACTS controller (or) Significance of FACTS:-

A power electronic based system that provide control of one (or) more AC transmission system parameters. (V, X, S).

Basic types of FACTS controllers:-

(i) Series controllers (ii) shunt controllers.
(iii) combined series - series controllers.
(iv) Combined Series - shunt controllers.

FACTS controllers are represented by

(i) Series controllers:- → (Voltage type SVS)

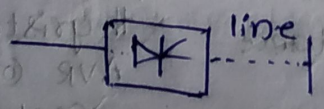

All series controllers inject v/g in series with the line as long as the v/g is in phase quadrature with the line current.

Series controllers consumes (or) Supplies power. Every controller is

⑥ storage sources: If any interruption in sending end side overcome.

Battery, capacitors, super conducting magnets.

SCMES

Superconducting magnet Energy storage

Series controller with battery storage:

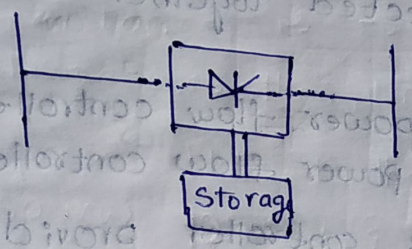

(ii) Shunt controller:- (current source type SVS)

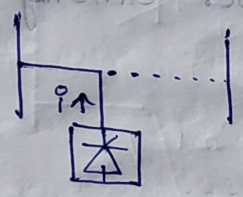

- All shunt controllers inject current into the system as long as the injected current is in phase quadrature with the line voltage.

Shunt controller acts as a source (or) absorber of reactive power.

Note

Types of Facts controllers is different from Types of Series & Shunt.

(iii) Combined Series-Series controllers:-

(UPFC & IPFC)

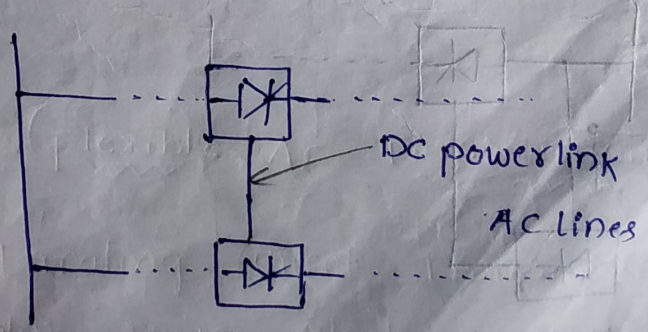

unified Series controller

This could be combination of separate series

controllers which are controlled in a coordinated manner in a multi-line transmission system (or) it could be unified controller.

Unified means that the dc terminals of all converters are connected together for real power transfer.

UPFC – unified power flow controller – real power
IPFC – Interline power flow controller real & reactive power

In UPFC, series controller provide independent series reactive compensation for each line but also transfer real power among the line via DC power link.

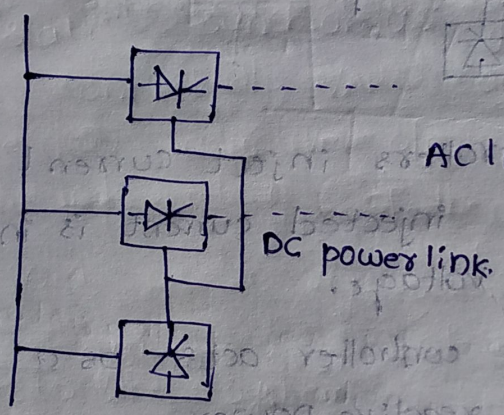

unified controller for multiple lines

- The real power transfer capability of unified series-series controller refered as interline power flow controller it in balance both real & reactive power in the line and there by maximum utilization of transmission system.

Series-shunt controller:

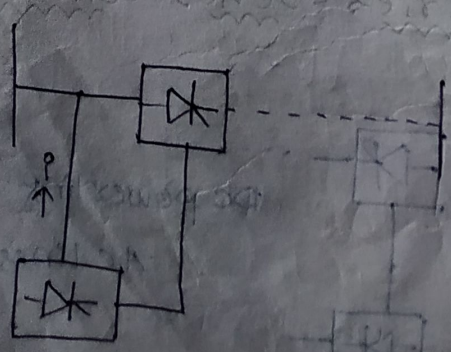

unified series-shunt

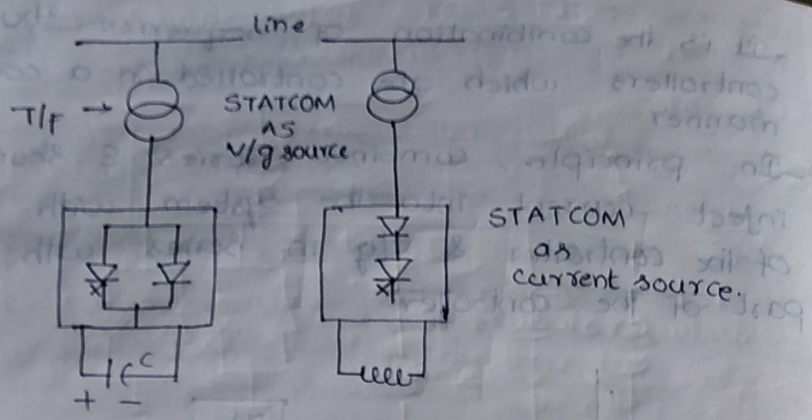

(i) STATCOM: (static synchronous compensator).

It is represented by the symbol

Def: A static synchronous generator (SSG) as a shunt connected VAR compensator whose capacitive (or) inductive o/p current can be controlled independent of the ac system voltage.

STATCOM as a V/g source is prefered than current source so that it can also inject voltage into the system.

- Diode is connected is parallel so that commutation will become easier.
- Shunt elements are always provided with an external energy source ie Transformer.

(switching converter are also called static devices).

Gate turn off

→ always shunt controller act as inverter.

Static synchronous Generator:

STATCOM with energy storage ie battery energy storage system (BESS) super conducting magnetic energy storage (SMES/SCMES) and large dc capacitor it is combination of STATCOM & energy storage to supply or Observe reactive power.

Def: STATIC self commutated switching power converter supplied from appropriate electrical energy store & operated to produce a set of adjustable.
- multiphase o/p v/g which may be coupled to ac power system for the purpose. controllable real & reactive power.

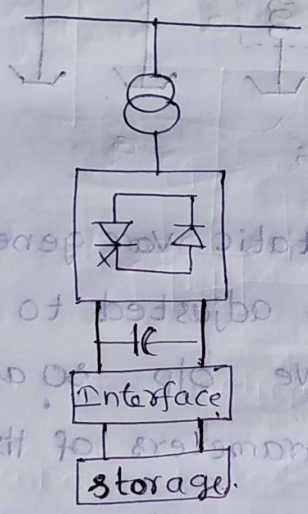

capacitor act as storage element reactor act as observer that's we not reactor.

All the thyristor controller devices are called variable impedance device.

SSG ⇒ STATIC COM with energy storage.

Battery energy storage system (BESS):

A chemical based energy storage system using shunt connected v/g source converters capable of rapidly adjusting the amount of energy which is supplied to (or) absorbed from AC system.

Super conducting magnet energy storage (SMES):

electronic converter