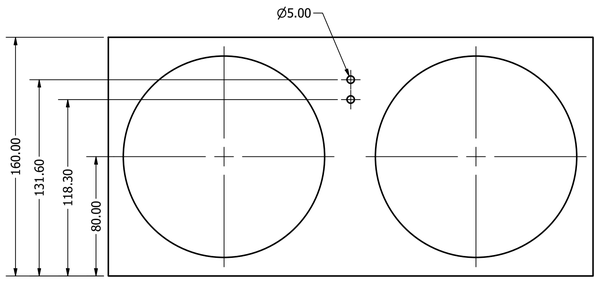

Plan

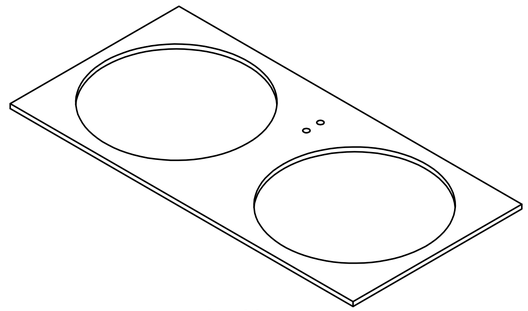

Auxiliary

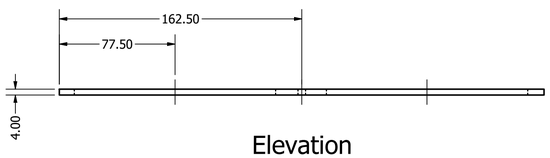

Elevation

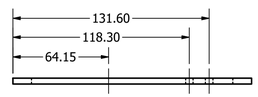

End Elevation

Large Fan Mount

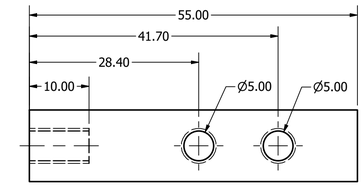

Plan

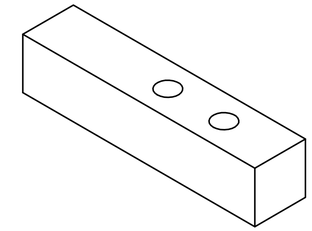

Auxiliary

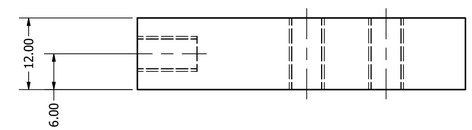

Elevation

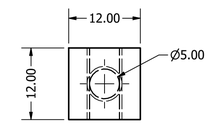

End Elevation

Fan Mount Block

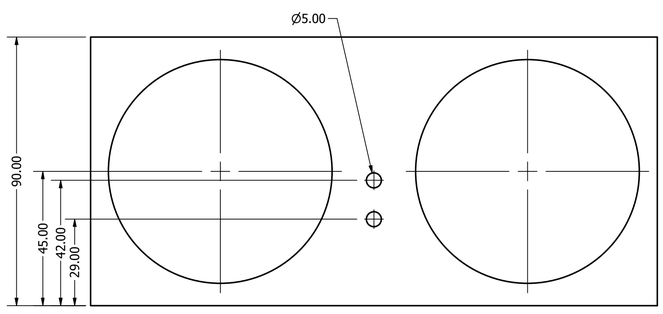

Plan

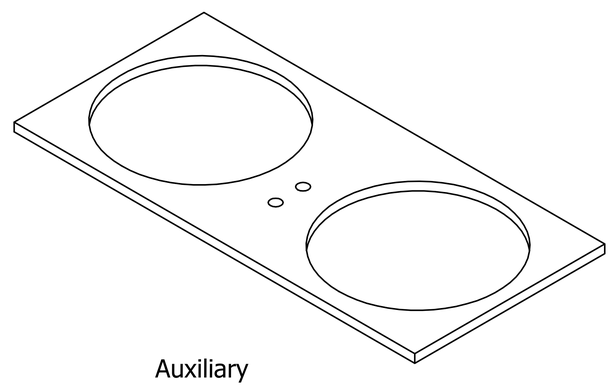

Auxiliary

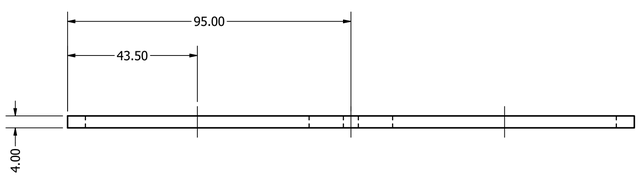

Elevation

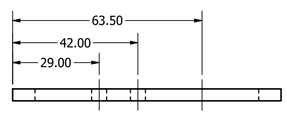

End Elevation

Small Fan Mount

Plan

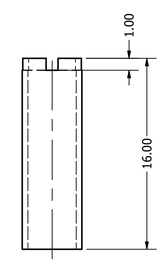

Elevation

Auxiliary

Machine Screw

DRAWN Jamie	19/03/2020	
CHECKED		TITLE 2DOF Fan Mount
QA		
MFG		
APPROVED		SIZE D / DWG NO Fan MOUNT 2DOF / REV
		SCALE 1 / 2 / SHEET 1 OF 1