REVISION HISTORY		
REV	DESCRIPTION	DATE
1	Initial release	1/15/2015

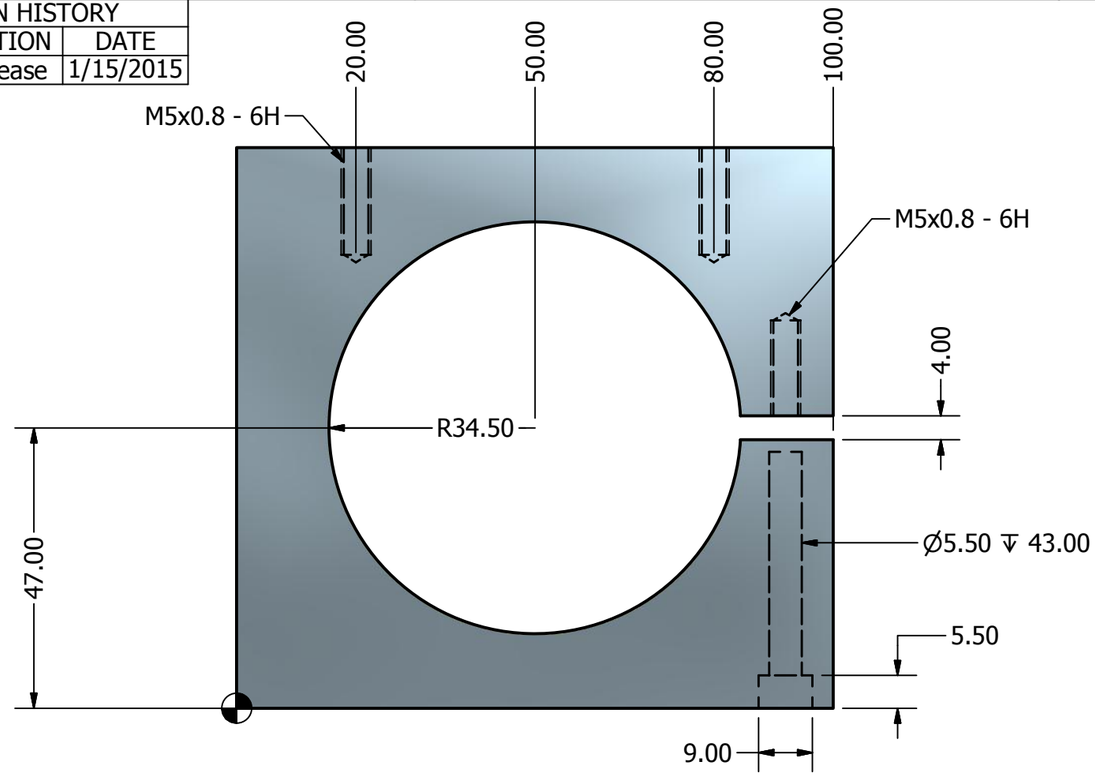

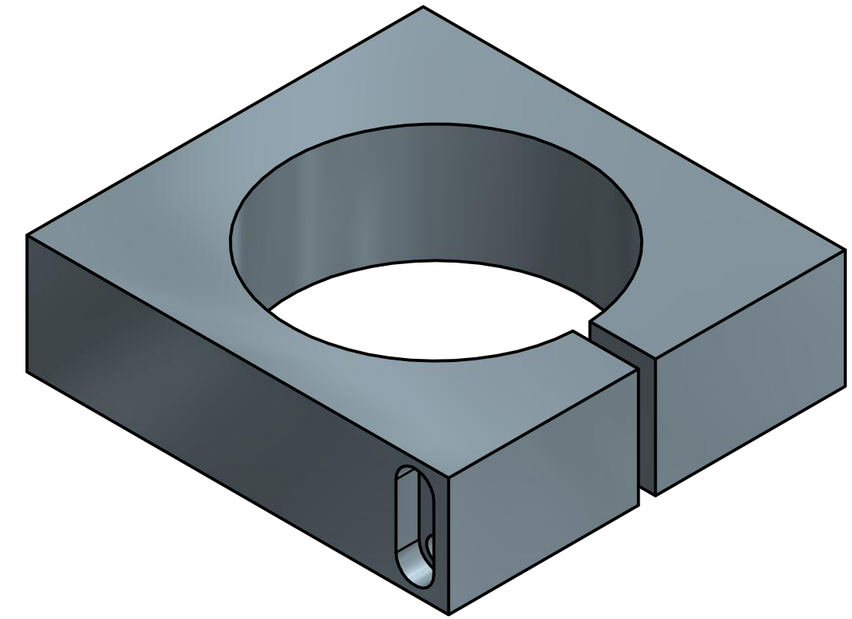

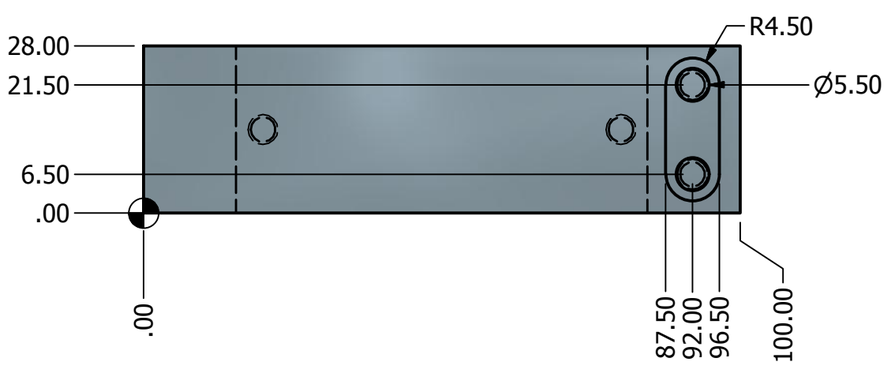

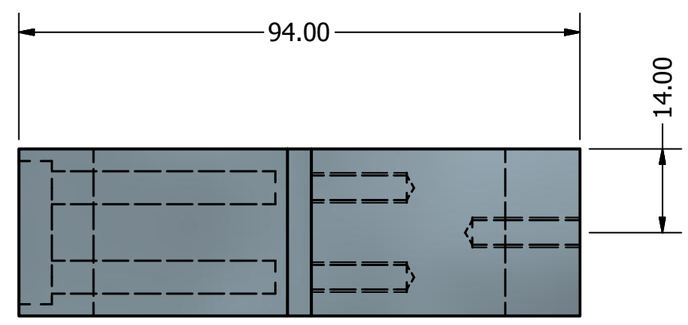

Material: Aluminum 6061

units: millimeters

Part Number: S3056

(cc) BY-NC

Description

DNP611 Mount, Aluminum