PyTeX Demo

Aspen Rodriguez Bloom

March 26, 2025

1 LaTeX Section

1.1 The Chemistry Library

- $[\mathrm{Cd}\{\mathrm{SC}(\mathrm{NH}_2)_2\}_2] \cdot [\mathrm{Cr}(\mathrm{SCN})_4(\mathrm{NH}_3)_2]_2$
- A≡B≡C≡D

1.2 The Electrical Engineering Library

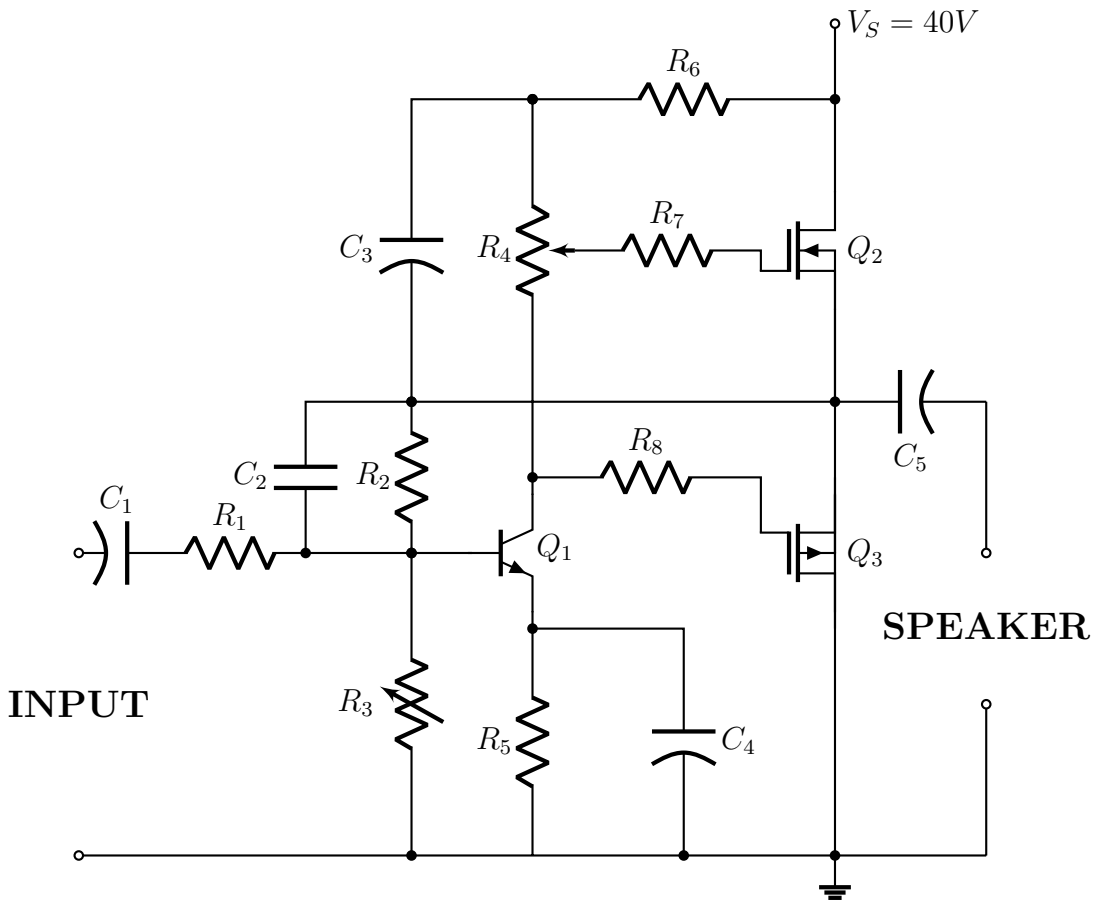

2 The Python Section

2.1 Quadratics

$y = 13x^2 + 74x - 82$ has roots 0.9496707050693314 and -6.641978397377023

2.2 Graphing

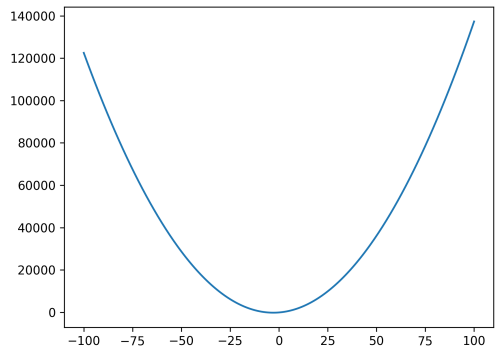

(a) A graph of $y = 13x^2 + 74x - 82$

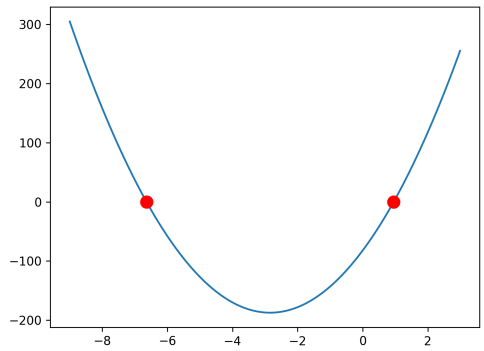

(b) A closer view of the roots 0.9497 and -6.642

Figure 1: The randomly generated quadratic equation from Section 2.1, graphed.