10-Off-Grid Energy Storage Systems

Off-Grid Electrical Systems in Developing Countries, 2nd Edition

Chapter 10

Preface

- These lectures slides are intended to accompany the textbook *Off-Grid Electrical Systems in Developing Countries, 2nd Edition, 2025* written by Dr. Henry Louie and published by SpringerNature
- Additional content, explanations, derivations, examples, problems, errata, and other materials are found in the book and on www.drhenrylouie.com
- To request solutions, explanations, permissions to use author-supplied images, or if you notice an error, please email the author at hlouie@ieee.org
- Inquiries about guest lectures, seminars, or trainings can be made to hlouie@ieee.org
- If you want to support work in electricity access, consider donating to KiloWatts for Humanity or IEEE Smart Village

10-Off-Grid Energy Storage Systems © 2025 by Henry Louie is licensed under CC BY-NC-SA 4.0 www.drhenrylouie.com

- This work (lecture slides) is available under the Creative Commons Attribution 4.0 license (CC BY-NC-SA 4.0) https://creativecommons.org/licenses/by-nc-sa/4.0 under the following terms:
  - You must give appropriate credit, provide a link to the license, and indicate if changes were made. You may do so in any reasonable manner, but not in any way that suggests the licensor endorses you or your use.
  - You may not use the material for commercial purposes.
  - If you remix, transform, or build upon the material, you must distribute your contributions under the same license as the original.
  - No additional restrictions — You may not apply legal terms or technological measures that legally restrict others from doing anything the license permits.
- All images, videos, and graphics remain the sole property of their source and may not be used for any purpose without written permission from the source.

Learning Outcomes

At the end of this lecture, you will be able to:

- ✓Describe the use of battery storage in off-grid electrification, emphasizing the key technical, economic, environmental, and social considerations
- ✓Explain the materials and electrochemical reactions in lead-acid and lithium-ion batteries and how they influence the battery's electrical behavior
- ✓Interpret battery parameters such as nominal voltage, capacity, cycle life, state-of-charge, and voltage and coulombic efficiency
- ✓Design a battery bank to meet capacity, current, voltage, and other specifications

10-Off-Grid Energy Storage Systems © 2025 by Henry Louie is licensed under CC BY-NC-SA 4.0 www.drhenrylouie.com

Off-Grid Energy Storage

- Energy storage devices decouple when energy is generated from when it is consumed
- Included in many solar, wind, and some hydro-powered systems architectures
- Off-grid systems use chemical batteries
  - Lead-acid
  - Lithium-ion
  - Other chemistries have been piloted in limited use

10-Off-Grid Energy Storage Systems © 2025 by Henry Louie is licensed under CC BY-NC-SA 4.0 www.drhenrylouie.com

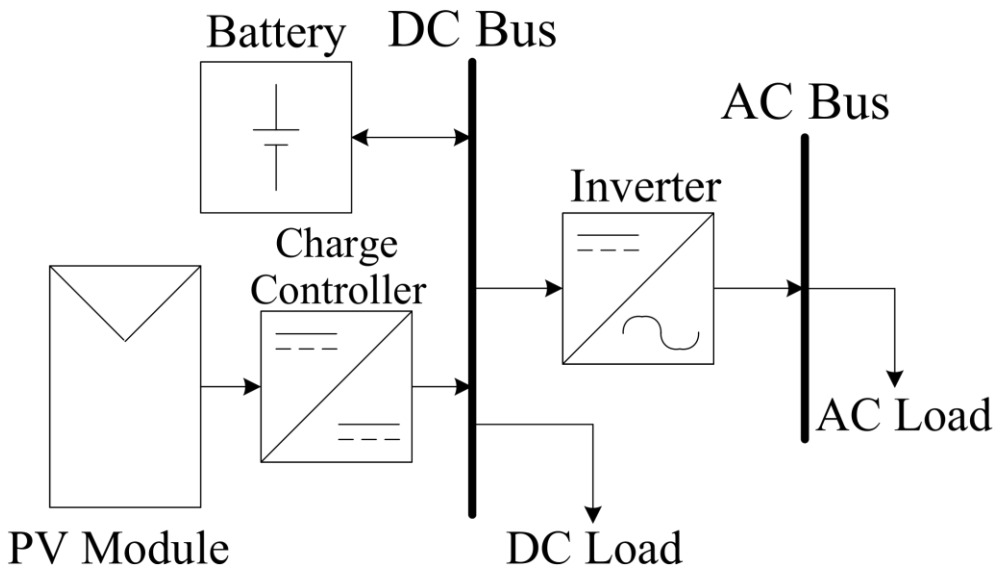

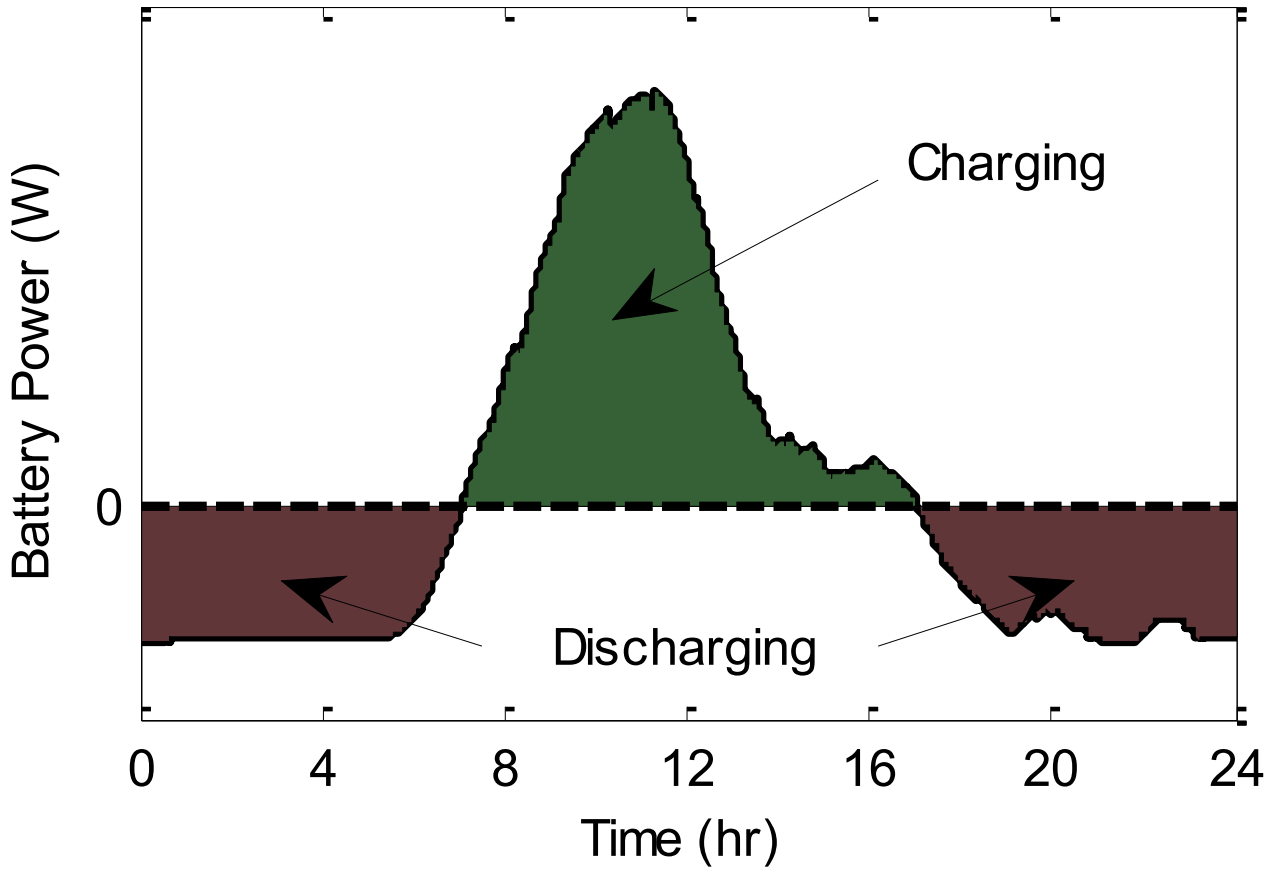

10-Off-Grid Energy Storage Systems © 2025 by Henry Louie is licensed under CC BY-NC-SA 4.0 www.drhenrylouie.com

Battery Chemistries

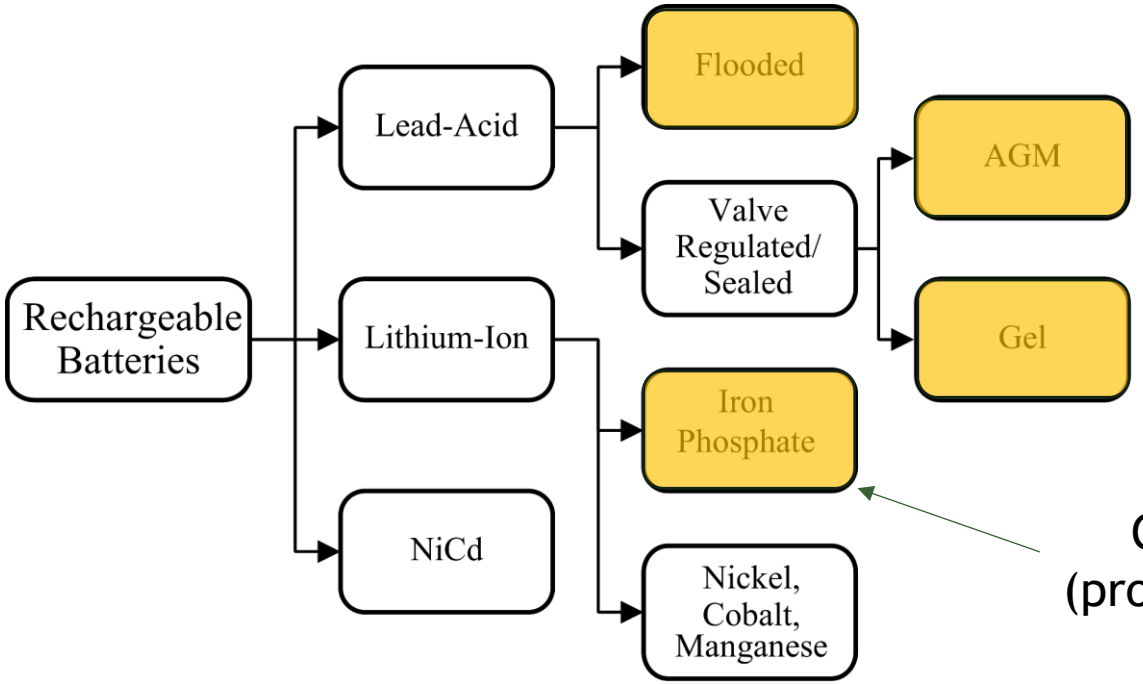

Called "$LiFePO_4$" (pronounced "Life-Po")

10-Off-Grid Energy Storage Systems © 2025 by Henry Louie is licensed under CC BY-NC-SA 4.0 www.drhenrylouie.com

Principles of Operation

- Batteries rely on chemical reactions to create a separation of charge or potential between the electrodes and electrolyte
  - voltage is associated with a separation of charge
- Open-circuit voltage depends (non-linearly) on:
  - chemicals involved
  - state of the chemicals (activities/concentrations, temperature)
- Examples: lead-acid 2.10 V, $LiFePO_4$ 3.2 V
- Voltage is an *intrinsic* property of the battery: size does not matter
- Chemicals and their state change during charge and discharging, and so the voltage changes as well

10-Off-Grid Energy Storage Systems © 2025 by Henry Louie is licensed under CC BY-NC-SA 4.0 www.drhenrylouie.com

Active Materials

- *Active material*: substances within a battery that participate in the charge or discharge reactions
  - electrodes, but sometimes the electrolyte as well
- When active material is depleted or prevented from reacting, the battery is no longer able to provide charge to a load

10-Off-Grid Energy Storage Systems © 2025 by Henry Louie is licensed under CC BY-NC-SA 4.0 www.drhenrylouie.com

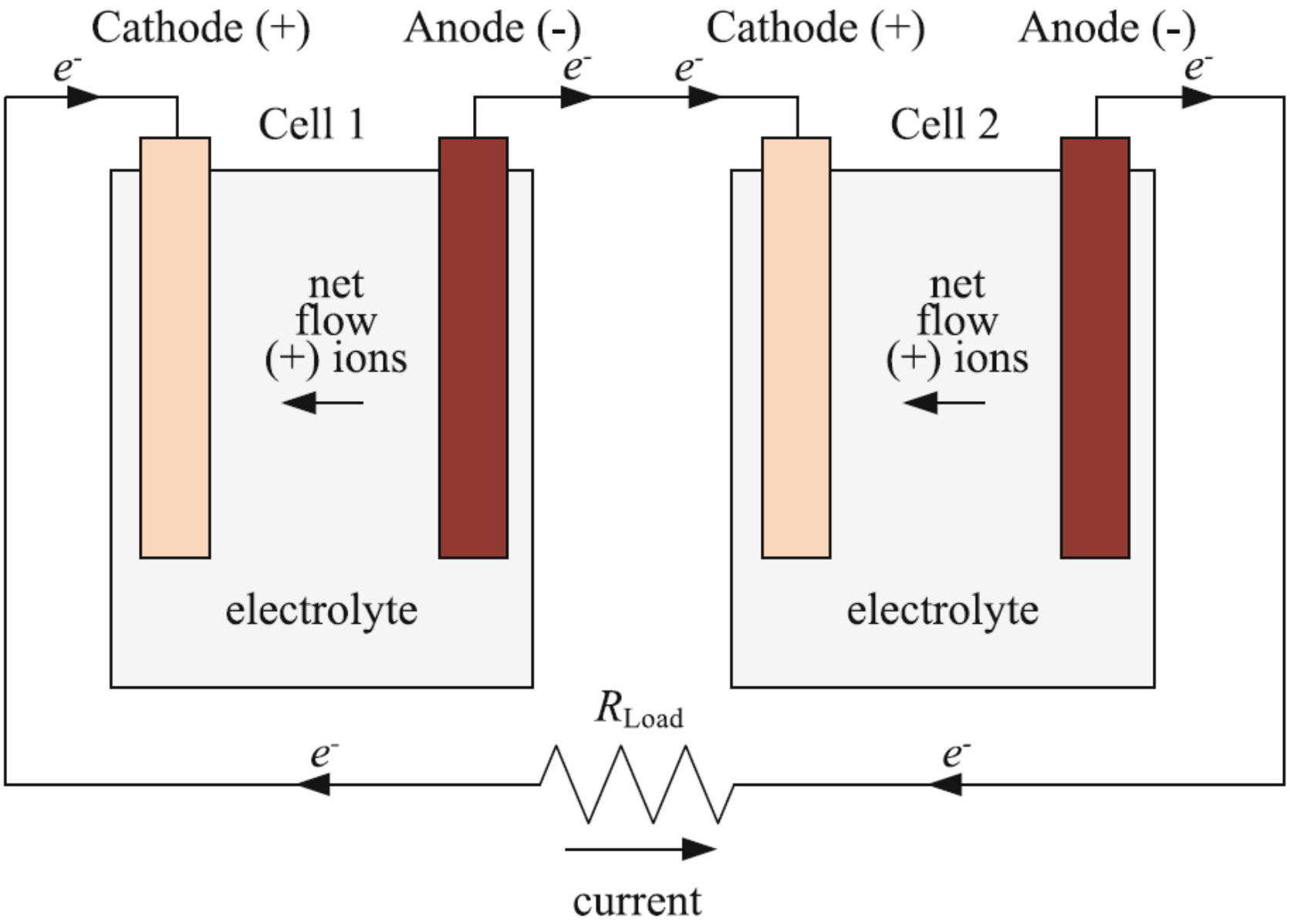

This battery consists of two cells in series

Electrons flow outside the battery, ions flow internally

10-Off-Grid Energy Storage Systems © 2025 by Henry Louie is licensed under CC BY-NC-SA 4.0 www.drhenrylouie.com

Gaston Planté

Gaston Planté invented the lead acid battery in 1859

- served as a teaching assistant to Becquerel (discoverer of the photovoltaic effect from Chapter 5)
- fun fact: discovered the fossil of *Gastornis parisiensis*

By Vince Smith from London, CC BY-SA 2.0

10-Off-Grid Energy Storage Systems © 2025 by Henry Louie is licensed under CC BY-NC-SA 4.0 www.drhenrylouie.com

(*courtesy Outback Power*)

Types of Lead-Acid Batteries

Flooded Lead-Acid ("wet cell"):

- most common and mature lead-acid battery type
- battery is not permanently sealed
- electrolyte can be sampled and re-filled with pure water (never add sulfuric acid!)
- less expensive
- requires maintenance
- can spill

Sealed Lead-Acid (Valve-regulated lead-acid)

- Absorbent Glass Mat (AGM)
- Gel

Also OPzV (Ortsfest PanZerplatte Verschlossen) tubular electrodes, common in Europe

10-Off-Grid Energy Storage Systems © 2025 by Henry Louie is licensed under CC BY-NC-SA 4.0 www.drhenrylouie.com

Lead-Acid Battery

- Lead-acid batteries are usually designed for specific purposes
- Examples:
  - automotive (starting, lighting, ignition abbreviated as “SLI”)
  - forklifts
  - marine
  - off-grid systems (“deep cycle” or “solar battery”)

10-Off-Grid Energy Storage Systems © 2025 by Henry Louie is licensed under CC BY-NC-SA 4.0 www.drhenrylouie.com

Electrodes

- Electrodes formed around metallic grids to improve conductivity and mechanical strength
- Anode: lead (Pb) that resembles a sponge (to increase surface area and interaction with electrolyte)
- Cathode: lead dioxide (PbO_2)

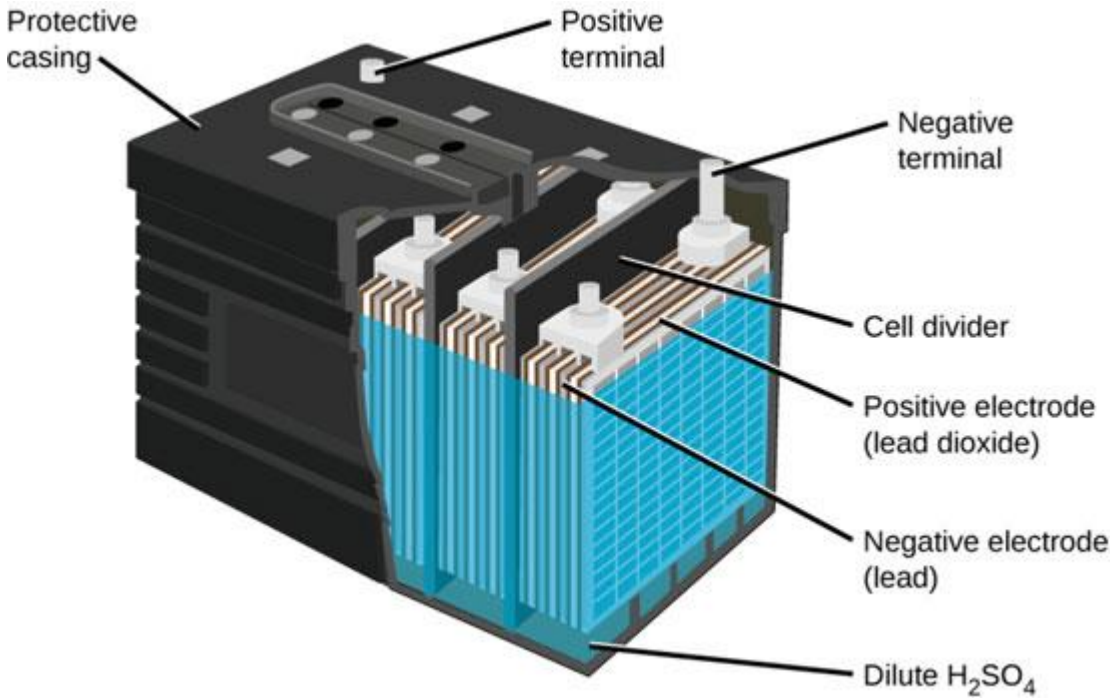

from https://opentextbc.ca/chemistry/chapter/17-5-batteries-and-fuel-cells/ and is licensed under CC BY 4.0 https://creativecommons.org/licenses/by/4.0/

Electrolyte

- Sulfuric acid (H_2SO_4) diluted in pure water
- Concentration of sulfuric acid in a fully-charged lead acid battery is typically 6 moles per liter
  - recall that a “mole” is a measurement of the amount of a substance
  - number of particles in 1 mole of a substances is 6.022×10^{23} (Avogadro’s constant)
- As a battery is discharged, the concentration decreases to about 1 to 2 moles per liter when “fully discharged”
- <u>Change in electrolyte concentration is important in understanding the voltage characteristics of lead-acid batteries</u>

10-Off-Grid Energy Storage Systems © 2025 by Henry Louie is licensed under CC BY-NC-SA 4.0 www.drhenrylouie.com

Discharge Process

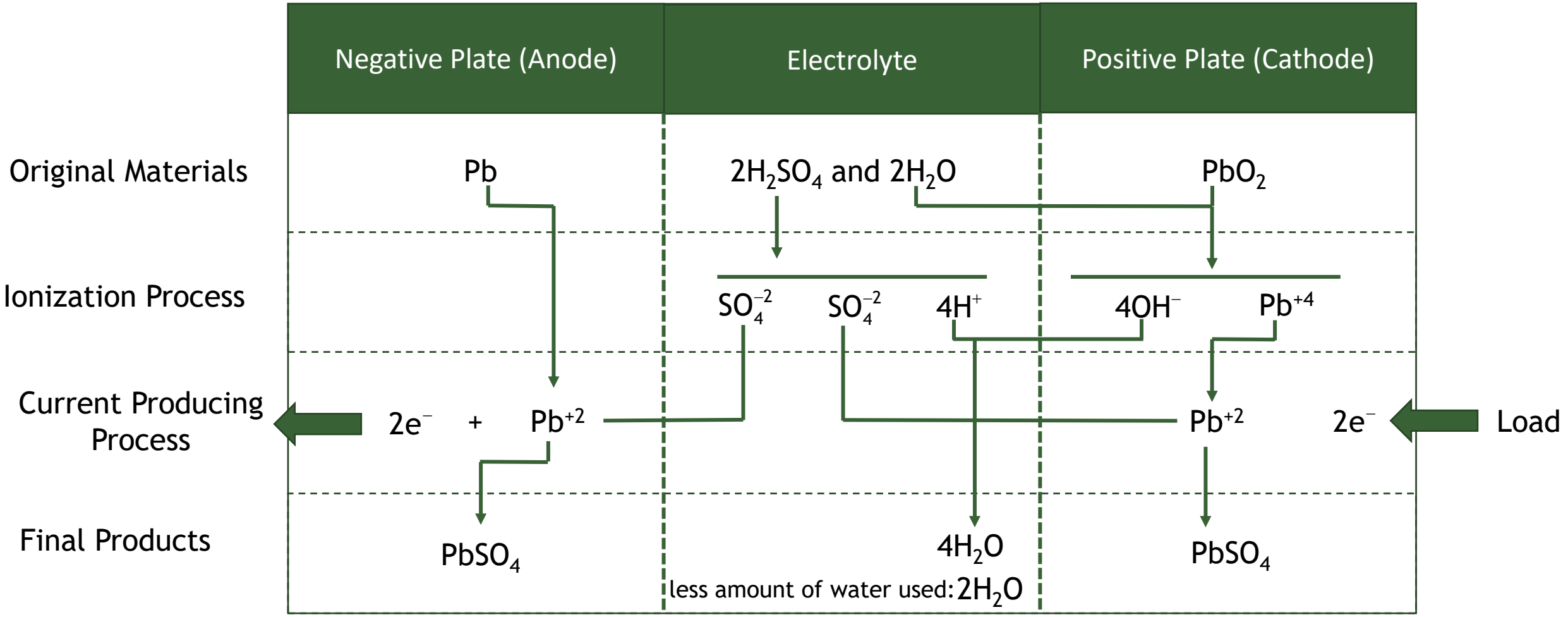

After Mantell, *Batteries and Energy Systems*, 2nd edition

Note: there are somewhat different explanations of the sequence of reactions

y Storage Systems © 2025 by Henry Louie is licensed under CC BY-NC-SA 4.0 www.drhenrylouie.com

Discharge Process

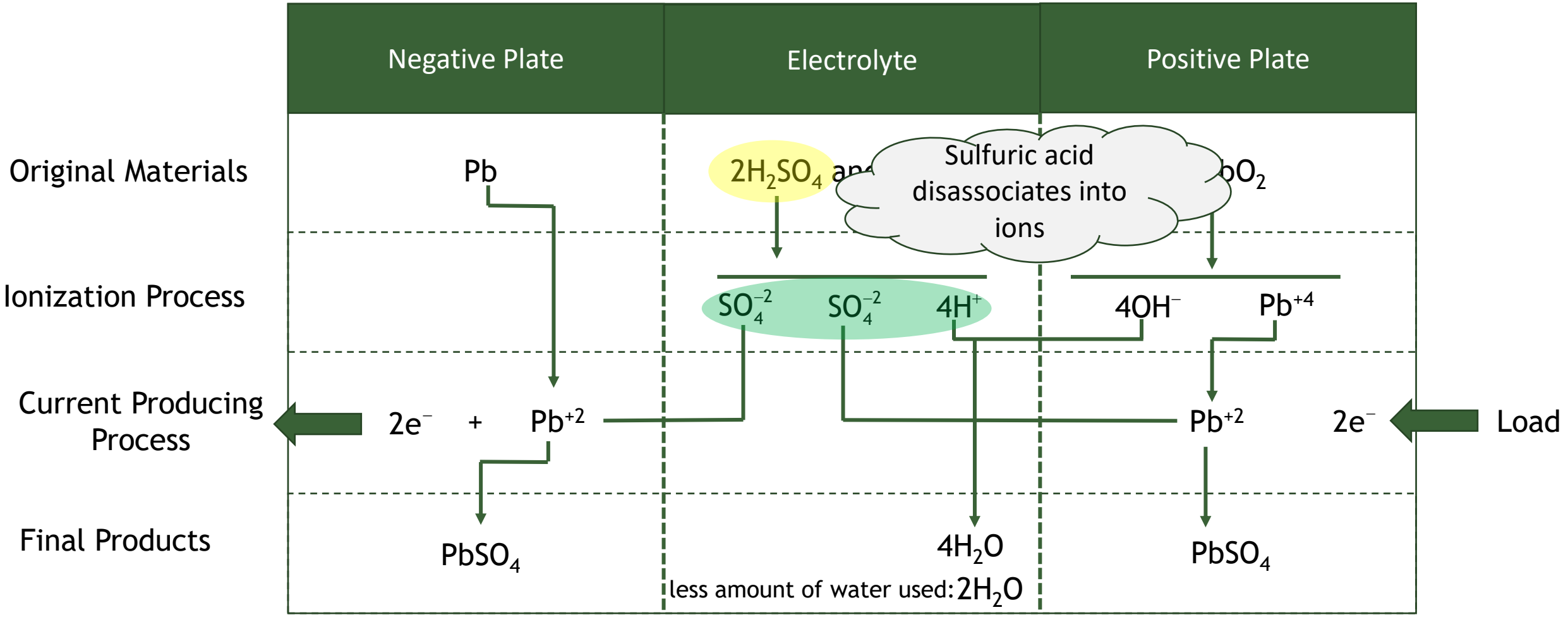

After Mantell, *Batteries and Energy Systems*, 2nd edition

10-Off-Grid Energy Storage Systems © 2025 by Henry Louie is licensed under CC BY-NC-SA 4.0 www.drhenrylouie.com

Discharge Process

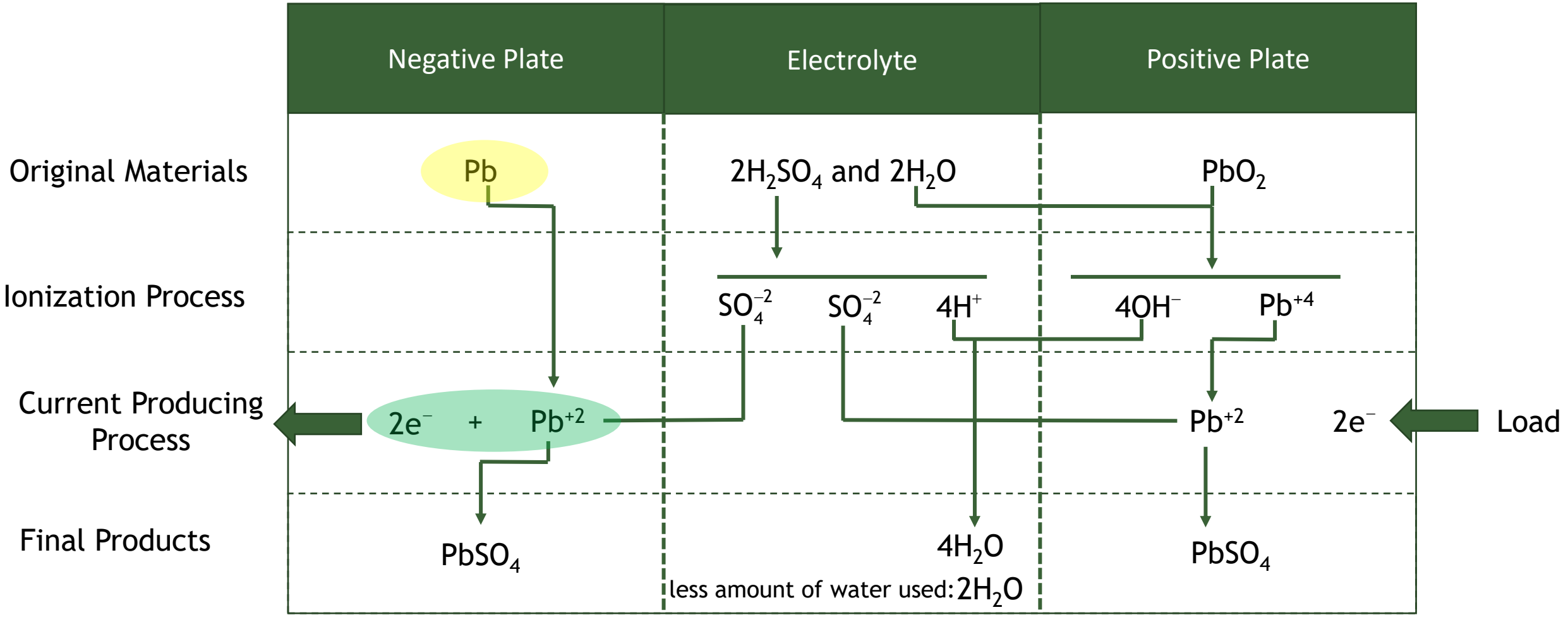

After Mantell, *Batteries and Energy Systems*, 2nd edition

10-Off-Grid Energy Storage Systems © 2025 by Henry Louie is licensed under CC BY-NC-SA 4.0 www.drhenrylouie.com

Discharge Process

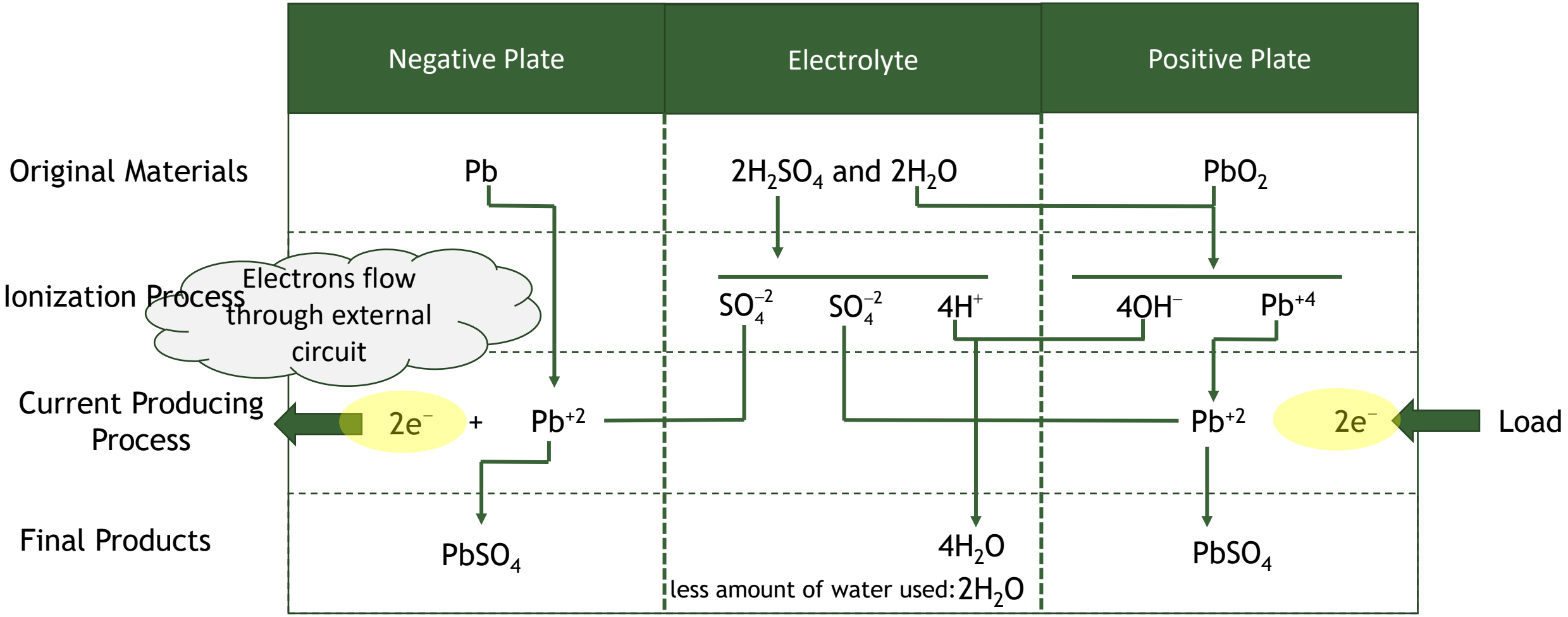

After Mantell, *Batteries and Energy Systems*, 2nd edition

10-Off-Grid Energy Storage Systems © 2025 by Henry Louie is licensed under CC BY-NC-SA 4.0 www.drhenrylouie.com

Discharge Process

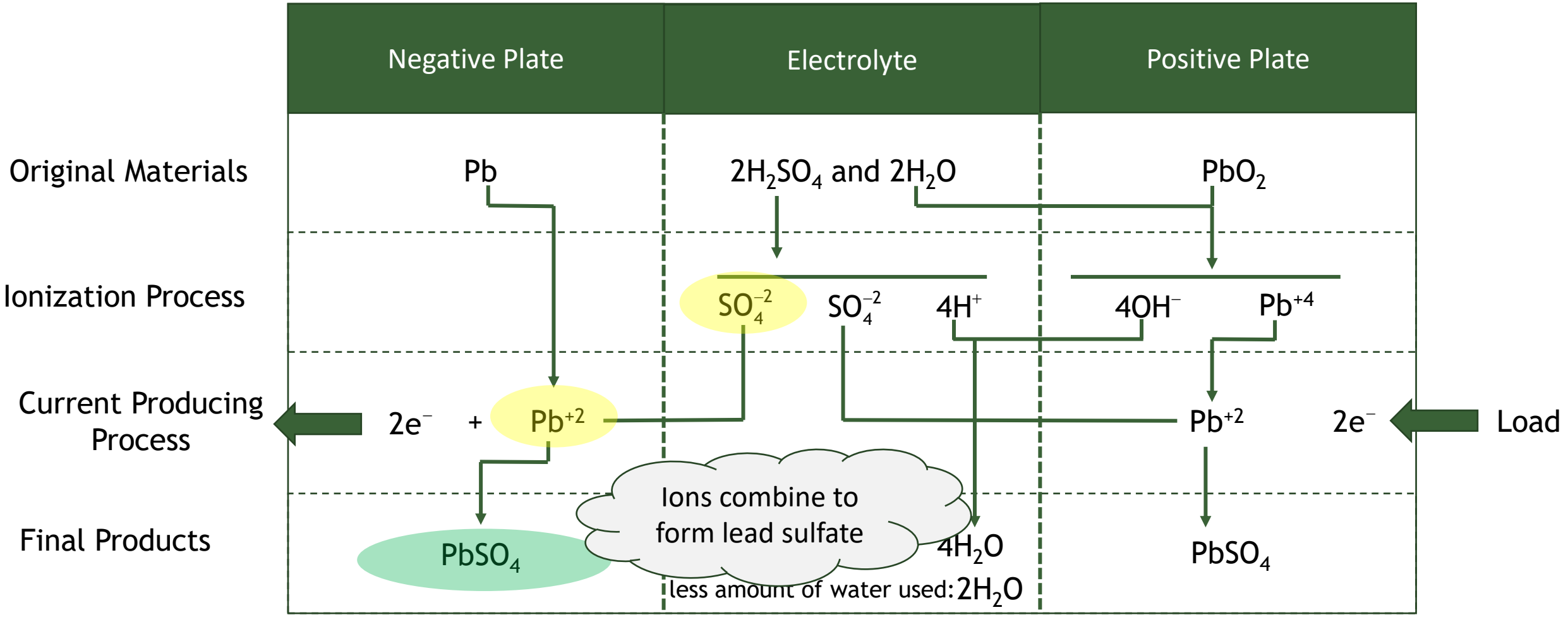

After Mantell, *Batteries and Energy Systems*, 2nd edition

10-Off-Grid Energy Storage Systems © 2025 by Henry Louie is licensed under CC BY-NC-SA 4.0 www.drhenrylouie.com

Discharge Process

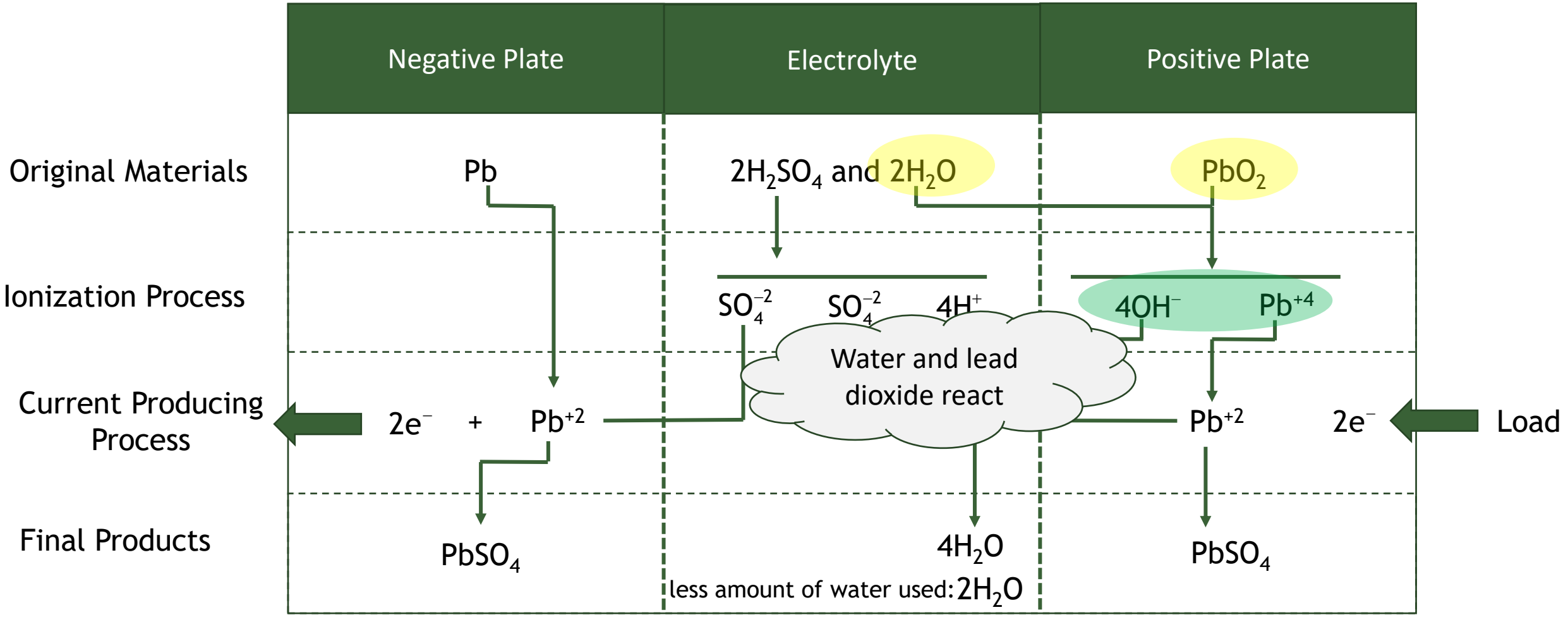

After Mantell, *Batteries and Energy Systems*, 2nd edition

10-Off-Grid Energy Storage Systems © 2025 by Henry Louie is licensed under CC BY-NC-SA 4.0 www.drhenrylouie.com

Discharge Process

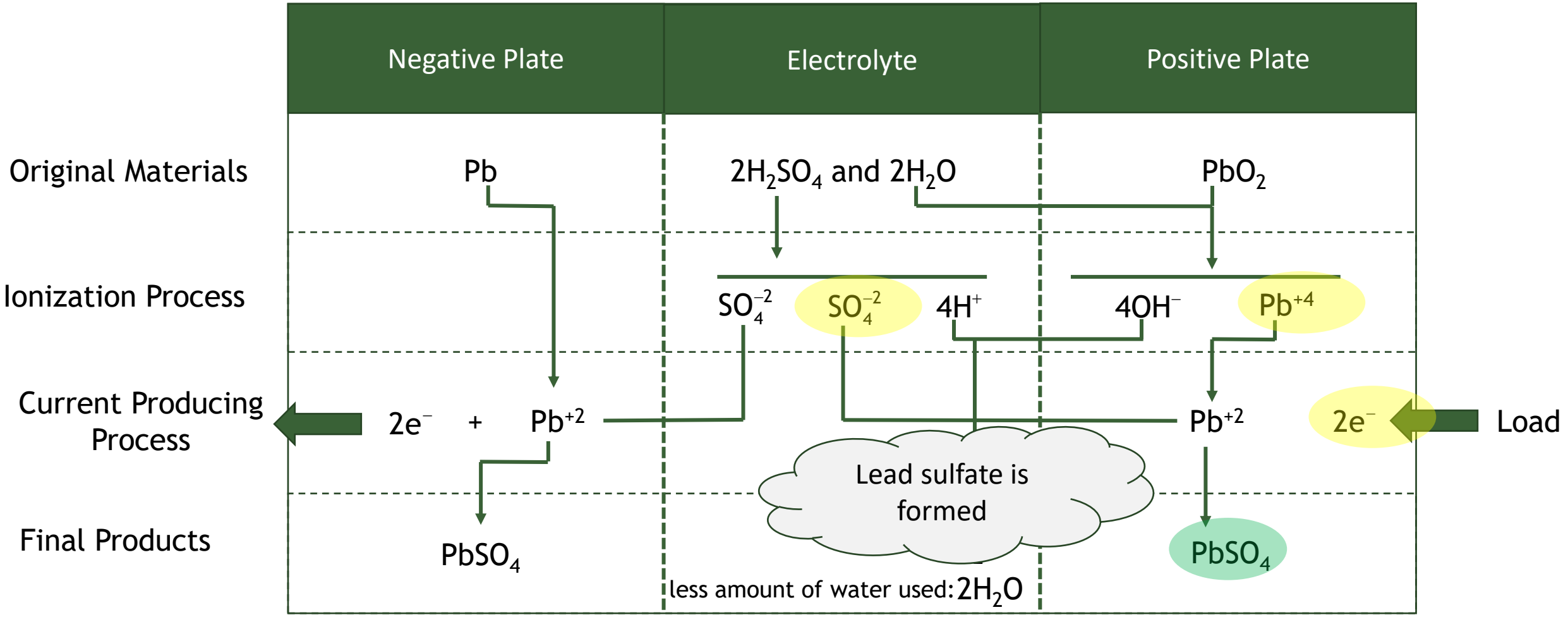

After Mantell, *Batteries and Energy Systems*, 2nd edition

10-Off-Grid Energy Storage Systems © 2025 by Henry Louie is licensed under CC BY-NC-SA 4.0 www.drhenrylouie.com

Discharge Process

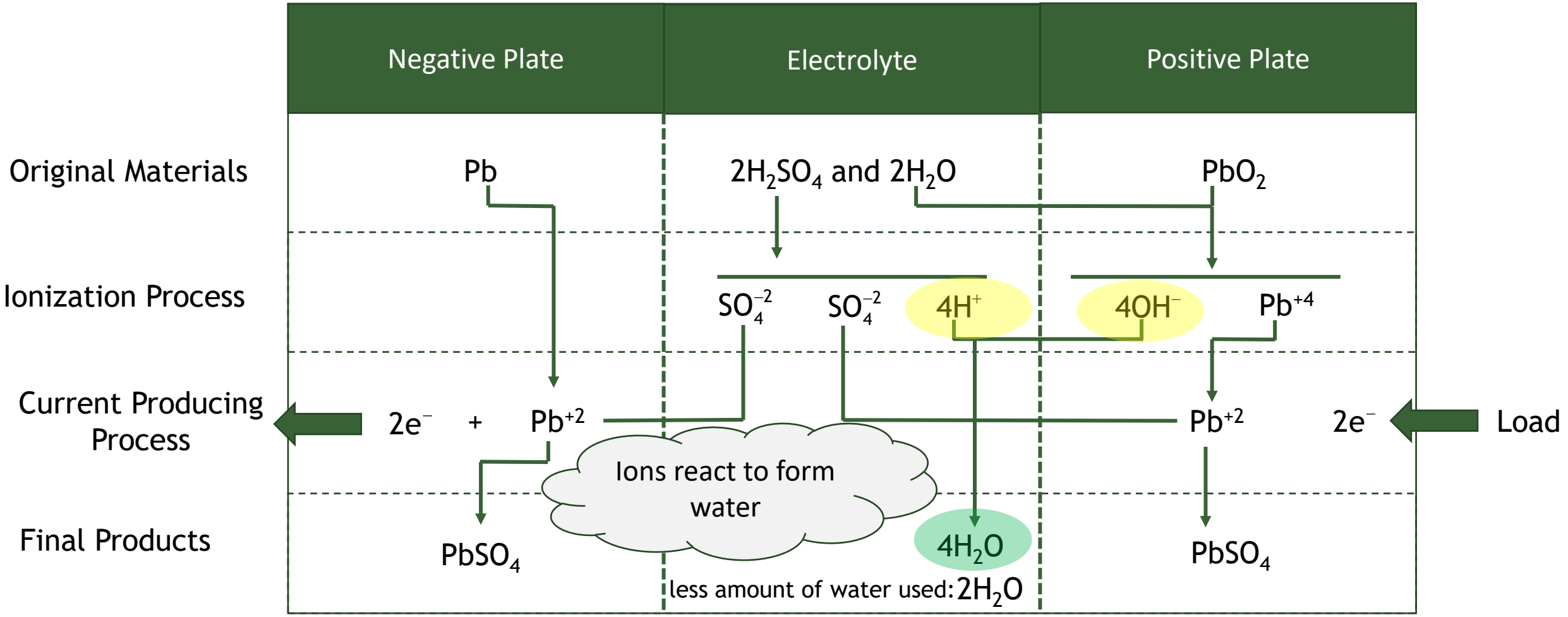

After Mantell, *Batteries and Energy Systems*, 2nd edition

10-Off-Grid Energy Storage Systems © 2025 by Henry Louie is licensed under CC BY-NC-SA 4.0 www.drhenrylouie.com

Discharge Process

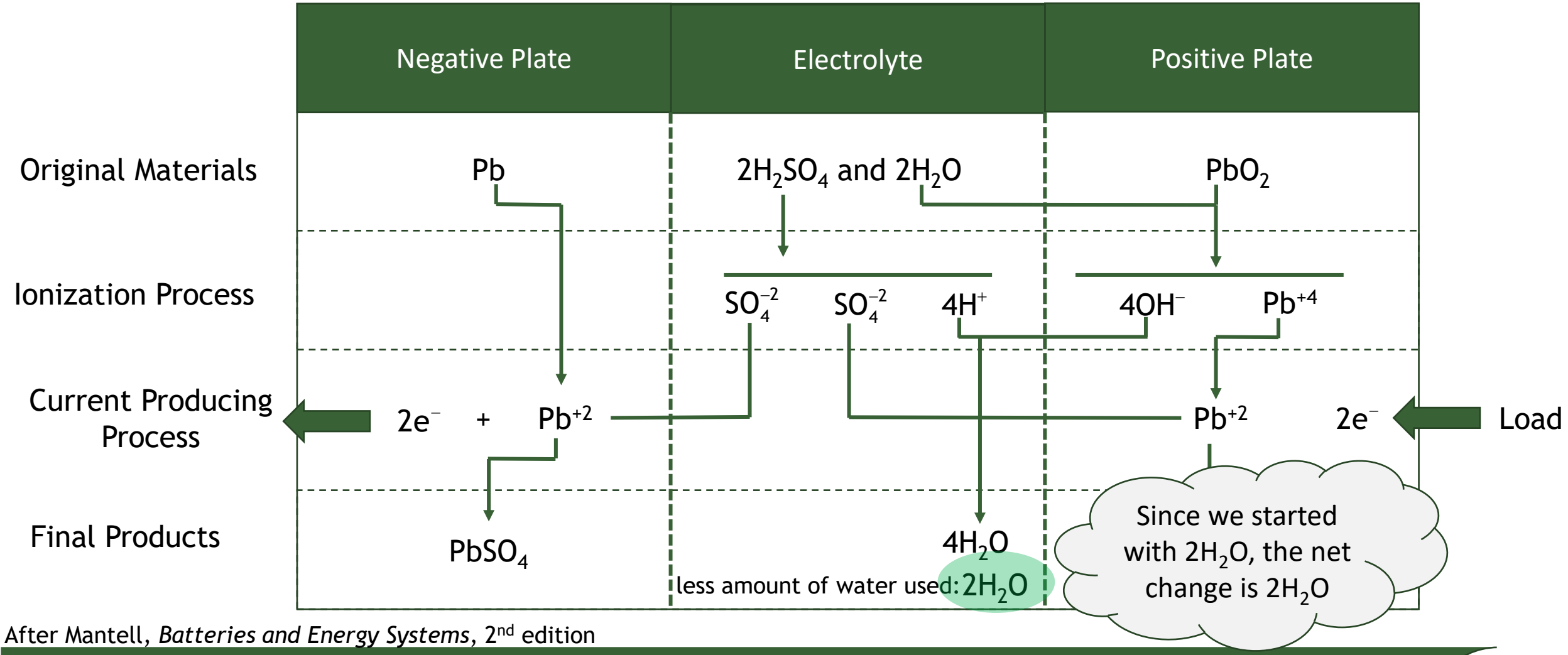

After Mantell, *Batteries and Energy Systems*, 2nd edition

10-Off-Grid Energy Storage Systems © 2025 by Henry Louie is licensed under CC BY-NC-SA 4.0 www.drhenrylouie.com

Discharge Reactions

Cathode (+ Terminal)

$$PbO_2 + SO_4^{2-} + 4H^+ + 2e^- \rightarrow PbSO_4 + 2H_2O$$

Anode (- Terminal)

$$Pb + SO_4^{2-} \rightarrow PbSO_4 + 2e^-$$

Complete Reaction

$$PbO_2 + Pb + 2H_2SO_4 \rightarrow 2PbSO_4 + 2H_2O$$

10-Off-Grid Energy Storage Systems © 2025 by Henry Louie is licensed under CC BY-NC-SA 4.0 www.drhenrylouie.com

Fully-Charged, Open Circuit

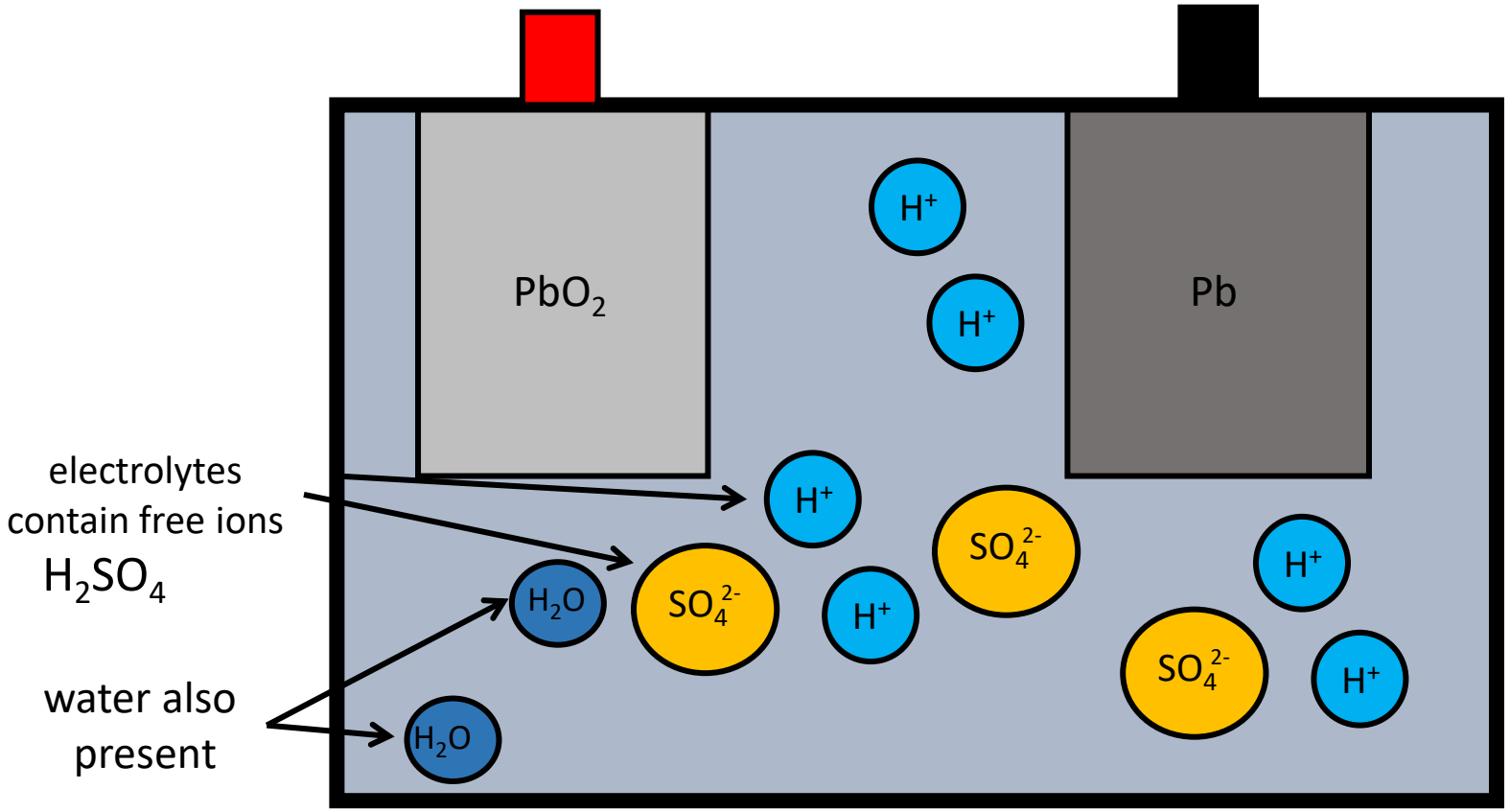

Concentration of sulfuric acid: ~6 moles

10-Off-Grid Energy Storage Systems © 2025 by Henry Louie is licensed under CC BY-NC-SA 4.0 www.drhenrylouie.com

Discharging

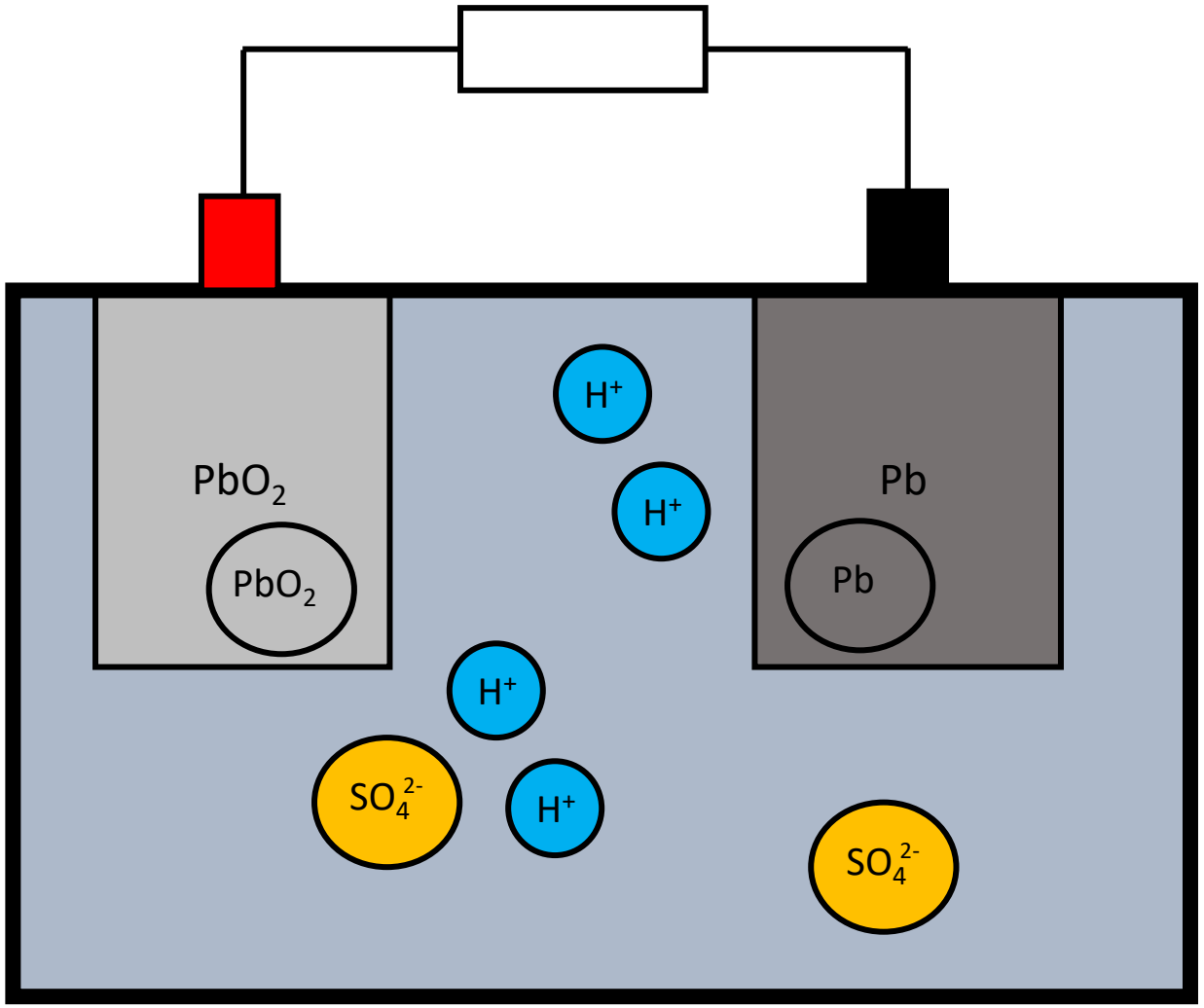

10-Off-Grid Energy Storage Systems © 2025 by Henry Louie is licensed under CC BY-NC-SA 4.0 www.drhenrylouie.com

Discharging

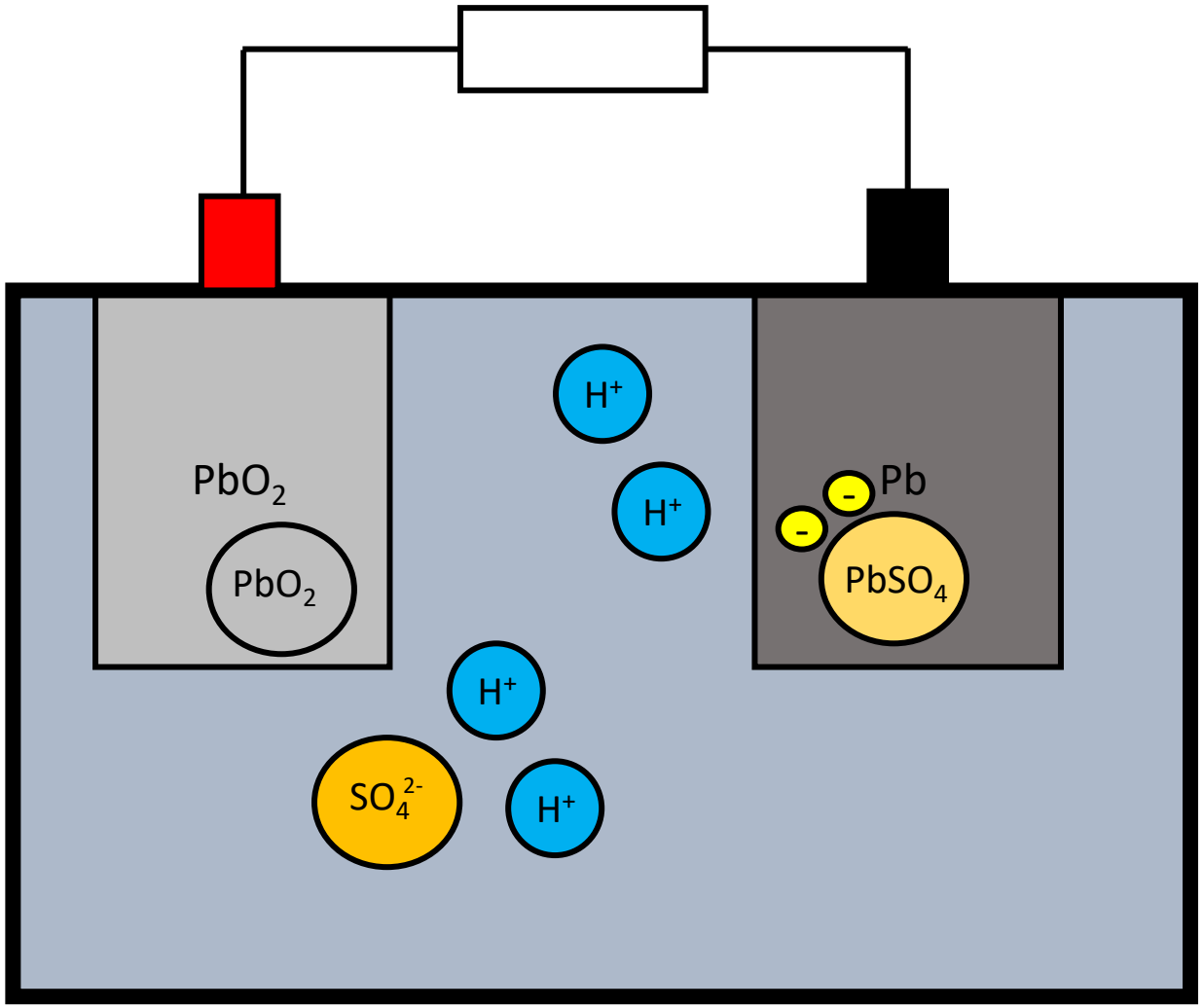

10-Off-Grid Energy Storage Systems © 2025 by Henry Louie is licensed under CC BY-NC-SA 4.0 www.drhenrylouie.com

Discharging

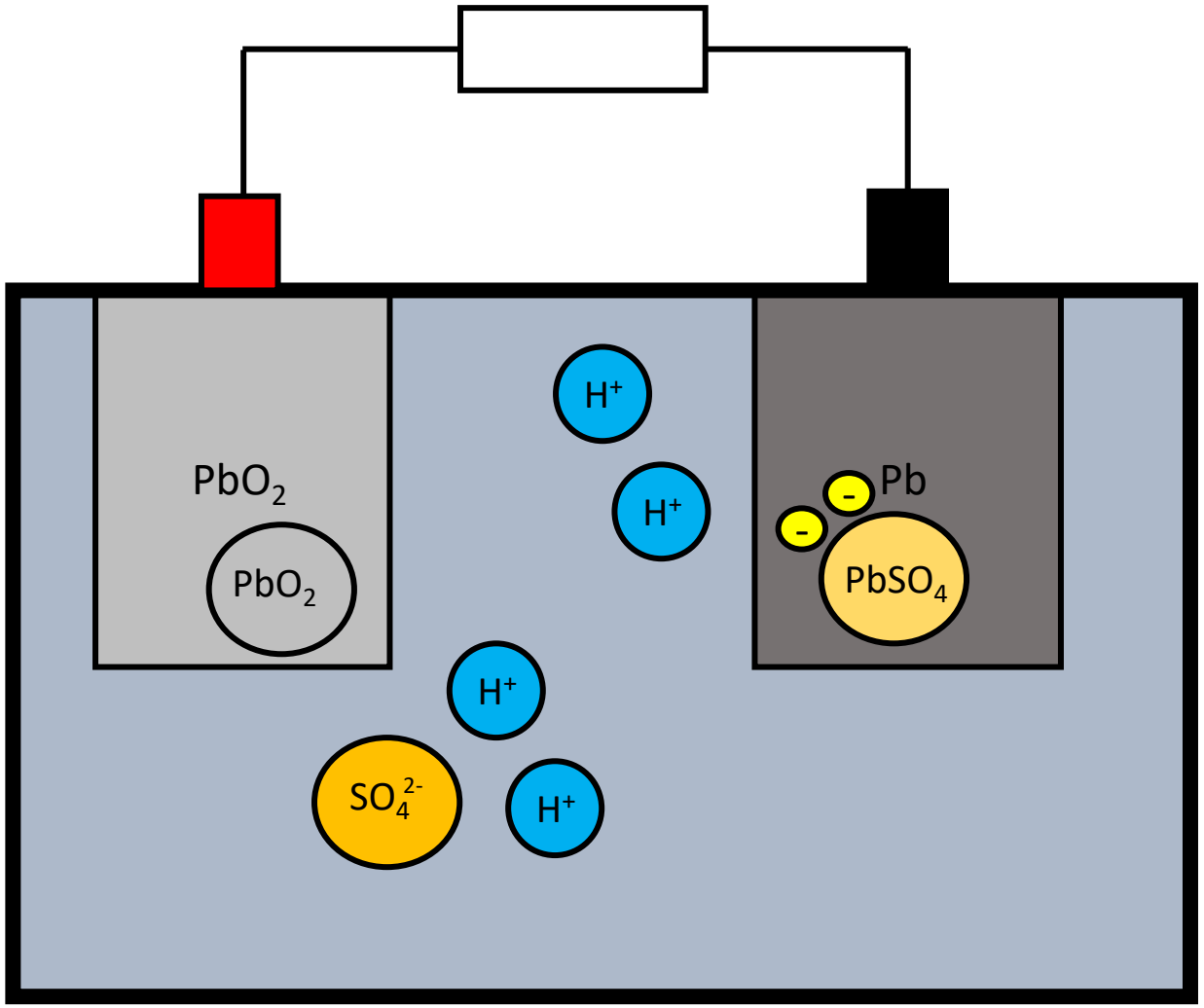

10-Off-Grid Energy Storage Systems © 2025 by Henry Louie is licensed under CC BY-NC-SA 4.0 www.drhenrylouie.com

Discharging

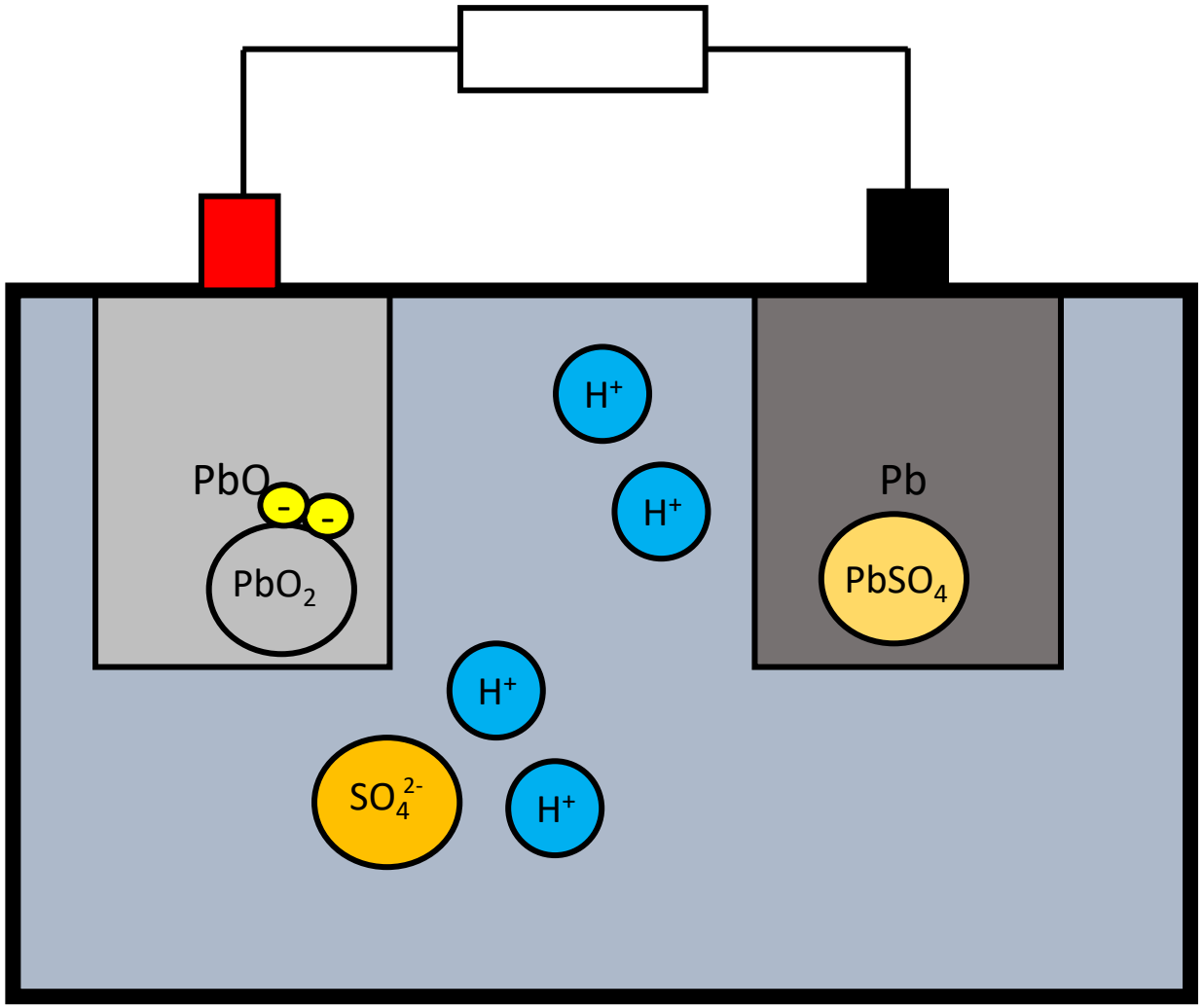

10-Off-Grid Energy Storage Systems © 2025 by Henry Louie is licensed under CC BY-NC-SA 4.0 www.drhenrylouie.com

Discharging

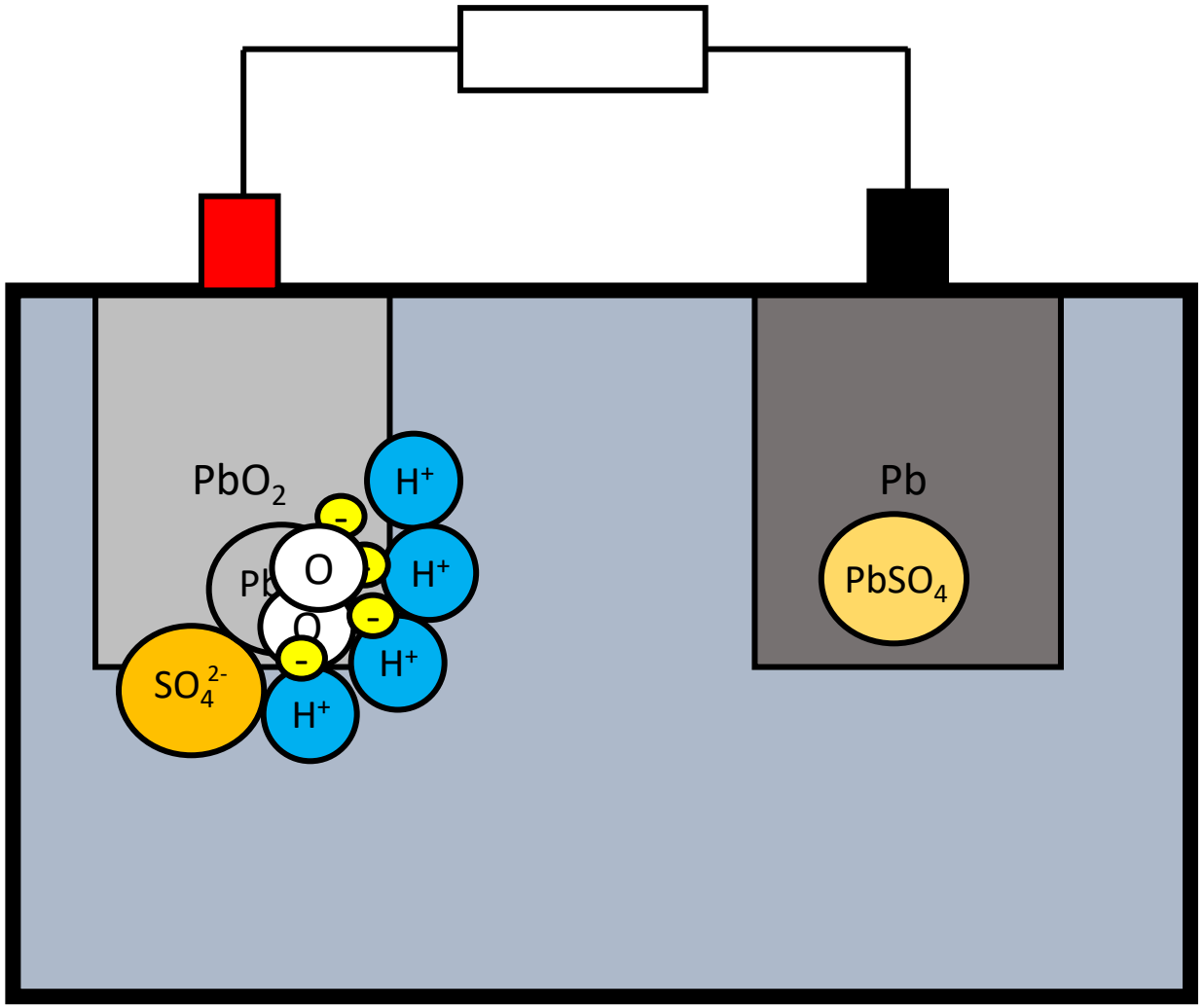

10-Off-Grid Energy Storage Systems © 2025 by Henry Louie is licensed under CC BY-NC-SA 4.0 www.drhenrylouie.com

Discharging

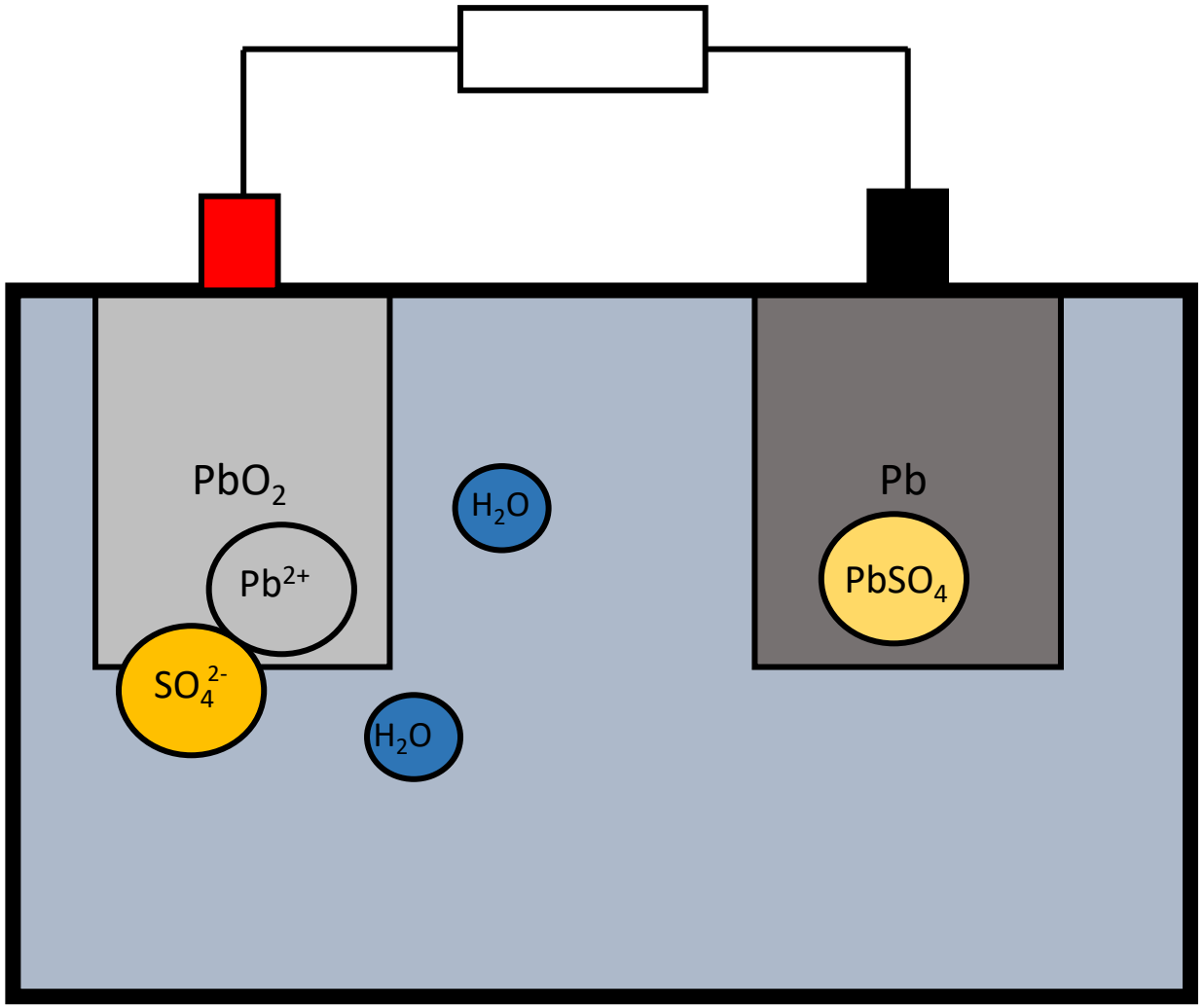

10-Off-Grid Energy Storage Systems © 2025 by Henry Louie is licensed under CC BY-NC-SA 4.0 www.drhenrylouie.com

Discharging

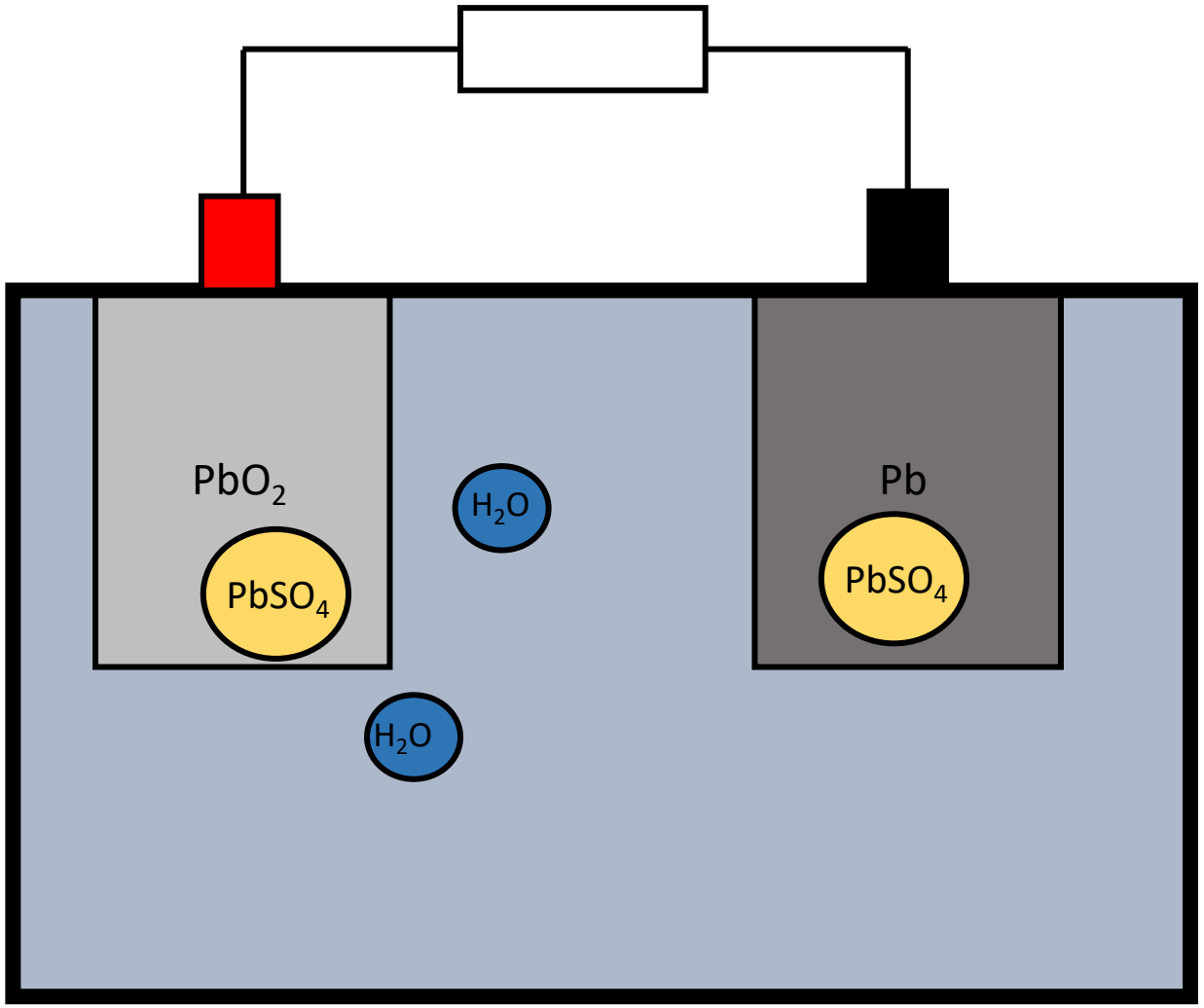

10-Off-Grid Energy Storage Systems © 2025 by Henry Louie is licensed under CC BY-NC-SA 4.0 www.drhenrylouie.com

Discharging

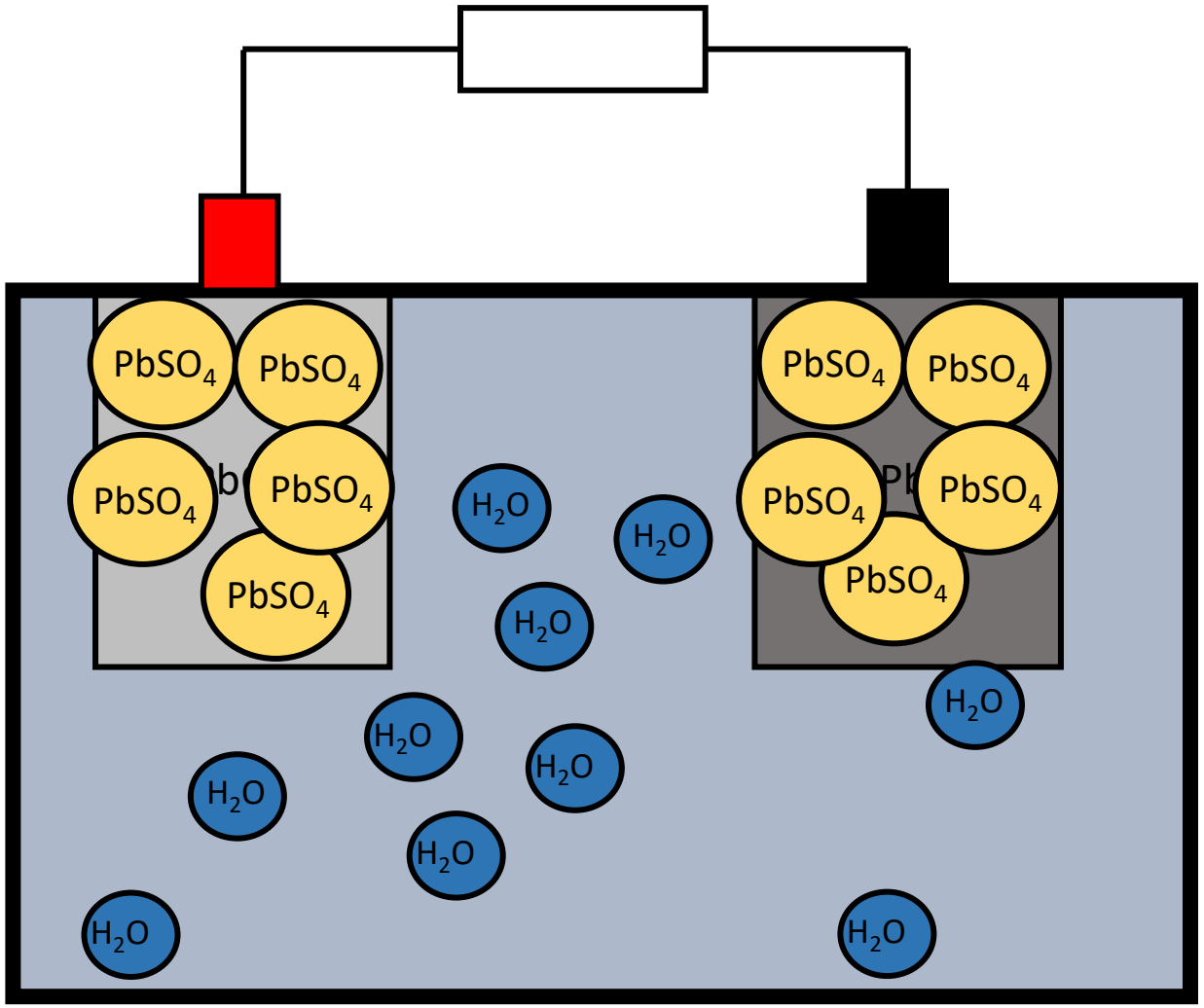

10-Off-Grid Energy Storage Systems © 2025 by Henry Louie is licensed under CC BY-NC-SA 4.0 www.drhenrylouie.com

Charge Process

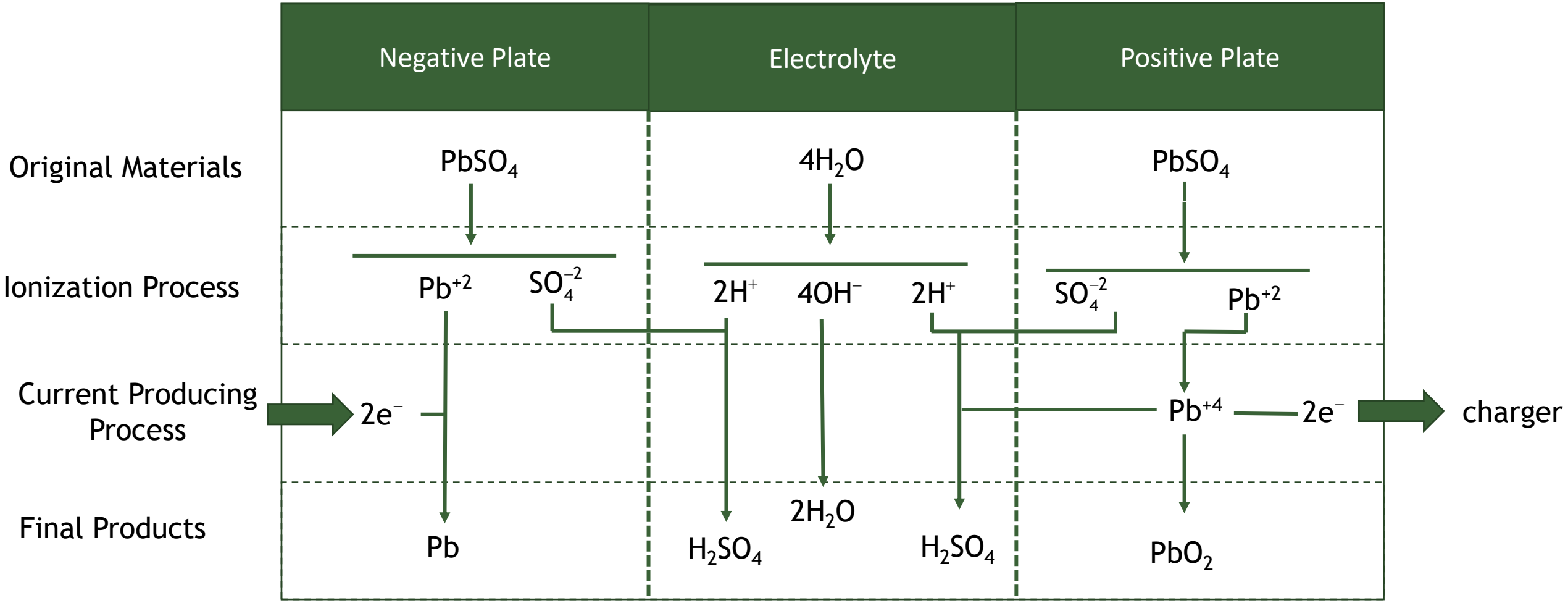

After Mantell, *Batteries and Energy Systems*, 2nd edition

10-Off-Grid Energy Storage Systems © 2025 by Henry Louie is licensed under CC BY-NC-SA 4.0 www.drhenrylouie.com

Charge Reactions

Cathode (+ Terminal)

$$PbSO_4 + 2H_2O \rightarrow PbO_2 + SO_4^{2-} + 4H^+ + 2e^-$$

Anode (- Terminal)

$$PbSO_4 + 2e^- \rightarrow Pb + SO_4^{2-}$$

Complete Reaction

$$2PbSO_4 + 2H_2O \rightarrow PbO_2 + Pb + 2H_2SO_4$$

Charge reactions
are the opposite
of the discharge reactions

10-Off-Grid Energy Storage Systems © 2025 by Henry Louie is licensed under CC BY-NC-SA 4.0 www.drhenrylouie.com

Exercise

Explain why/how the specific gravity (ratio of its density to the density of pure water) of the electrolyte in a lead-acid battery can be used to estimate its state-of-charge.

10-Off-Grid Energy Storage Systems © 2025 by Henry Louie is licensed under CC BY-NC-SA 4.0 www.drhenrylouie.com

Exercise

Explain why/how the specific gravity (ratio of its density to the density of pure water) of the electrolyte in a lead-acid battery can be used to estimate its state-of-charge.

The specific density of sulfuric acid is not 1.0 (it is about 1.84). As the battery discharges, the specific gravity of the electrolyte will decrease since the concentration of sulfuric acid also decreases.

10-Off-Grid Energy Storage Systems © 2025 by Henry Louie is licensed under CC BY-NC-SA 4.0 www.drhenrylouie.com

Swelling & Shedding

- As lead-acid batteries charge and discharge, the electrodes chemically change (electrodes swell and contract)
- Change in electrode shape and electrolyte volume can cause the battery to mechanically fail, causing short-circuits or active material to separate from the electrodes (shedding)
- The reactions in practice are not completely reversible and so the shape of the electrode changes over time

10-Off-Grid Energy Storage Systems © 2025 by Henry Louie is licensed under CC BY-NC-SA 4.0 www.drhenrylouie.com

Other Reactions

Reactions within the lead-acid battery are always occurring, even when not being charged or discharged

- reactions when over-discharged
- reactions when over-charged
- corrosion
- self-discharge reactions

10-Off-Grid Energy Storage Systems © 2025 by Henry Louie is licensed under CC BY-NC-SA 4.0 www.drhenrylouie.com

Over-discharge

- Deeply discharging a lead-acid battery can cause the lead sulfate ($PbSO_4$) that forms on the electrodes to turn into hard, dense crystals (*sulfation*)
- Crystals prevent interaction of electrode and electrolyte
- Amount of charge that can be provided is permanently reduced (battery is de-rated)

By Sakar.solanki - with my own camera, CC BY-SA 3.0, https://commons.wikimedia.org/w/index.php?curid=23691423

10-Off-Grid Energy Storage Systems © 2025 by Henry Louie is licensed under CC BY-NC-SA 4.0 www.drhenrylouie.com

Avoiding Sulfation

Ways to avoid sulfation:

- ✓Never deeply discharge the battery
- ✓Avoid leaving batteries at a low state-of-charge for prolonged periods of time (apply a “top up” charge every so often)
- ✓Avoid operating or storing battery at high temperatures

10-Off-Grid Energy Storage Systems © 2025 by Henry Louie is licensed under CC BY-NC-SA 4.0 www.drhenrylouie.com

Corrosion

- Corrosion occurs on lead-acid battery terminals
  - weakens connections, increasing resistance or even cause an open-circuit
- Cause: electrolyte escapes (seeps or vents) and reacts with the terminals
- Depending on the terminal connections, either lead sulfate or hydrated copper sulfate
- Prevented by greasing terminals

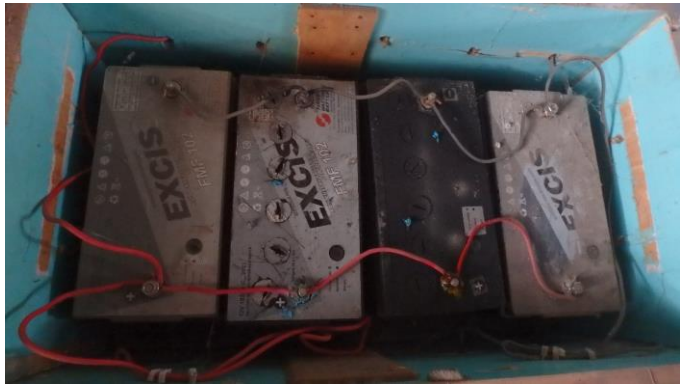

(all *courtesy H. Louie*)

10-Off-Grid Energy Storage Systems © 2025 by Henry Louie is licensed under CC BY-NC-SA 4.0 www.drhenrylouie.com

Informal Battery Recharging

(*courtesy P. Dauenhauer*)

10-Off-Grid Energy Storage Systems © 2025 by Henry Louie is licensed under CC BY-NC-SA 4.0 www.drhenrylouie.com

Self-Discharge

- Lead-acid will spontaneously discharge even when not connected to an external circuit
  - lead and lead dioxide will naturally react with the electrolyte (i.e. the system is not thermodynamically stable)
- Reactions at the anode and cathode are different from the charge/discharge reactions, and are independent from each other, but each result in the evolution of lead sulfate and reduction of capacity

10-Off-Grid Energy Storage Systems © 2025 by Henry Louie is licensed under CC BY-NC-SA 4.0 www.drhenrylouie.com

Self-Discharge Reactions

- Cathode Reaction:

$$PbO_2(s) + H_2SO_4(aq) \rightarrow PbSO_4(s) + H_2O(\ell) + 0.5O_2(g)$$

- Anode Reaction:

$$Pb(s) + H_2SO_4(aq) \rightarrow PbSO_4(s) + H_2(g)$$

Each produce a gas, which if vented from the battery reduces the amount of water that can be reformed

10-Off-Grid Energy Storage Systems © 2025 by Henry Louie is licensed under CC BY-NC-SA 4.0 www.drhenrylouie.com

Self-Discharge

- Anode self-discharge reaction occurs more rapidly than the cathode
- Self-discharge varies, but is often around 5% per month

10-Off-Grid Energy Storage Systems © 2025 by Henry Louie is licensed under CC BY-NC-SA 4.0 www.drhenrylouie.com

Over-Charging

- As the battery increases in charge, its voltage increases
- Higher voltages promotes other reactions in the battery
  - Anode:

$$2H^+(aq) + 2e^- \rightarrow H_2(g)$$

  - Cathode:

$$H_2O(\ell) \rightarrow 0.5O_2(g) + 2H^+(aq) + 2e^-$$

this is electrolysis

Both reactions produce hydrogen gas, which is explosive if concentrated

If gases are vented from the battery, it limits the amount of water that can be reformed

10-Off-Grid Energy Storage Systems © 2025 by Henry Louie is licensed under CC BY-NC-SA 4.0 www.drhenrylouie.com

Over-Charging

- Ways to prevent/reduce over-charging:
  - use a charge controller (3-stage)
  - use sealed---AGM or gel---batteries (which prevent venting and allow gases to reform)
- Mitigating the effects of over-charging
  - install flooded batteries in rooms with adequate ventilation
  - do not mount inverters or other controllers above flooded batteries
  - monitor electrolyte level and add distilled water in flooded batteries

10-Off-Grid Energy Storage Systems © 2025 by Henry Louie is licensed under CC BY-NC-SA 4.0 www.drhenrylouie.com

Electrochemistry

How is it possible for a potato (or lemon, or even wet soil) to power a small light or clock?

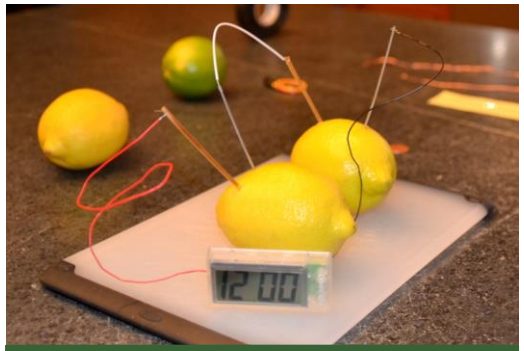

This Photo by Unknown Author is licensed under CC BY-SA

This Photo by Unknown Author is licensed under CC BY

10-Off-Grid Energy Storage Systems © 2025 by Henry Louie is licensed under CC BY-NC-SA 4.0 www.drhenrylouie.com

Electrochemistry

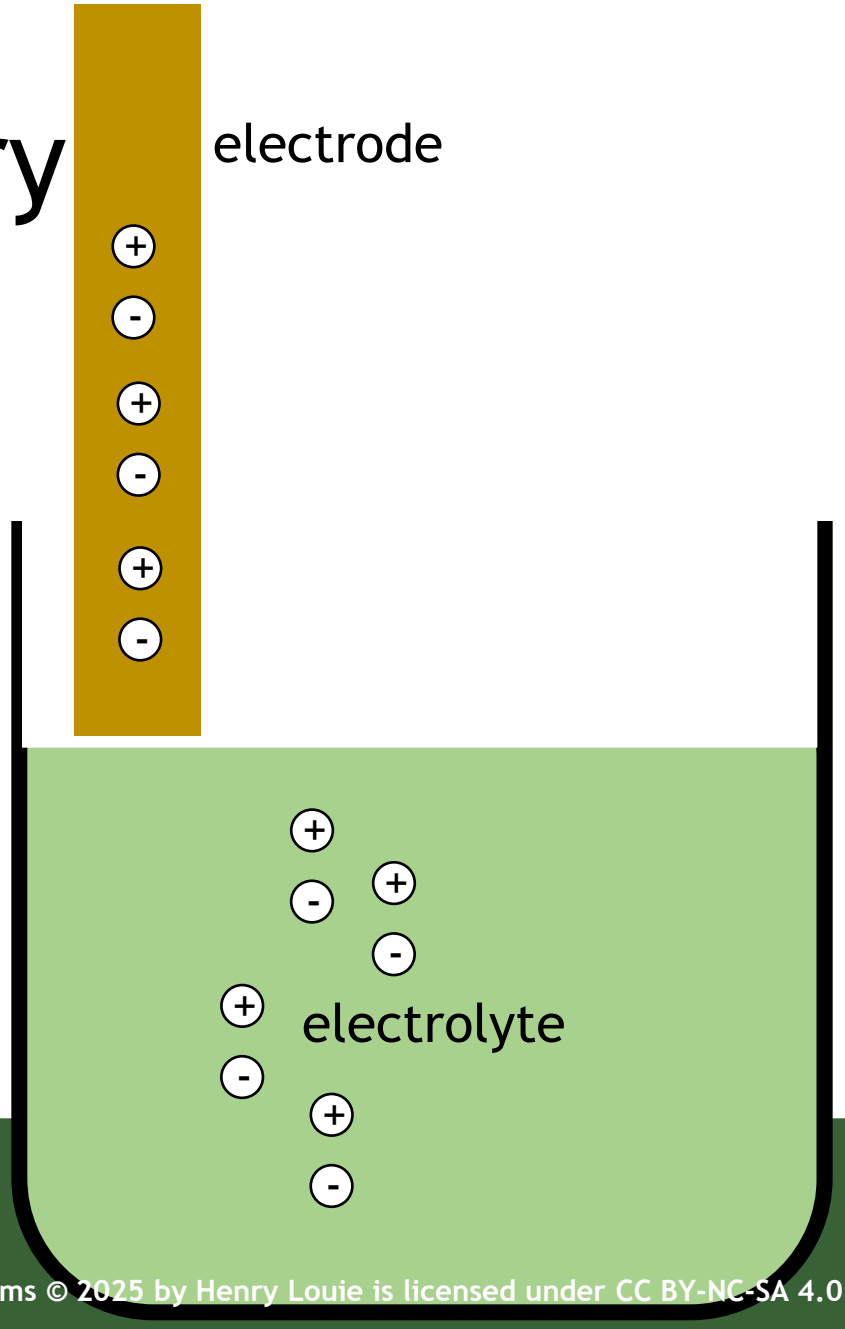

Electrode, electrolyte are both <u>electrically neutral</u> (number of electrons = number of protons)

Electrochemical "Cell"

10-Off-Grid Energy Storage Systems © 2025 by Henry Louie is licensed under CC BY-NC-SA 4.0 www.drhenrylouie.com

Chemical Potential

When dissimilar conductive substances come in contact, charges are exchanged. (see "*Fermi Level*" and "*Galvani Potential*" for details)

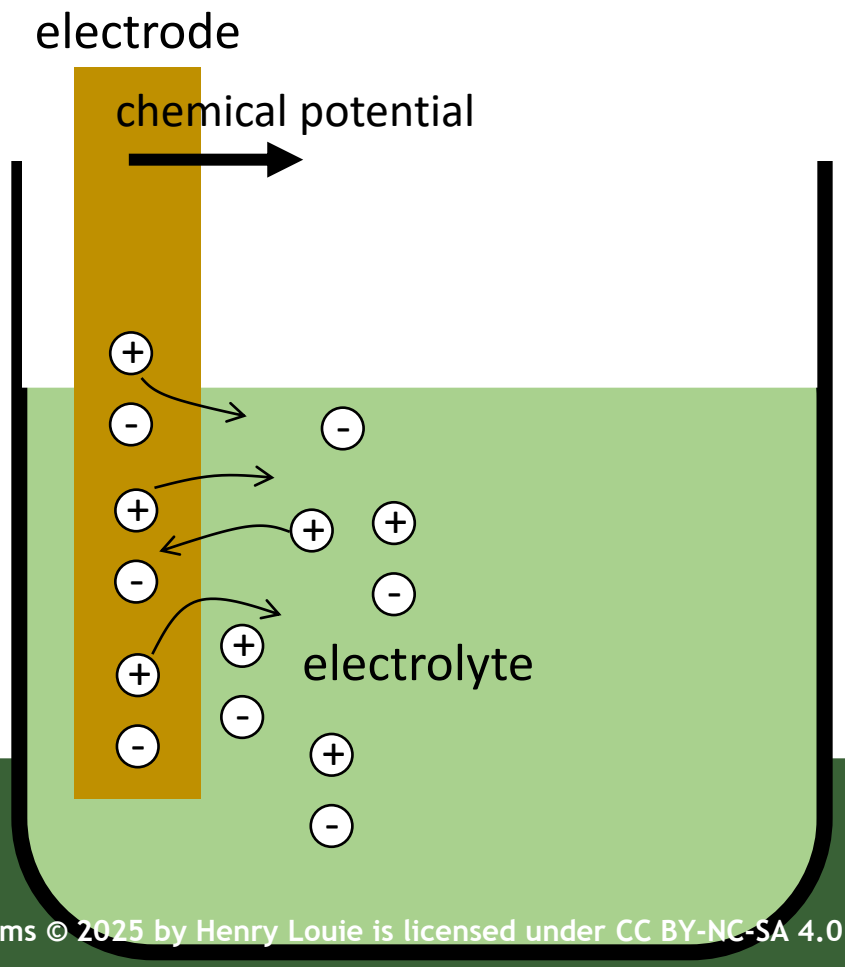

10-Off-Grid Energy Storage Systems © 2025 by Henry Louie is licensed under CC BY-NC-SA 4.0 www.drhenrylouie.com

Chemical Potential

Rate of charge transfer is not equal, and so the electrode/electrolyte are no longer electrically neutral

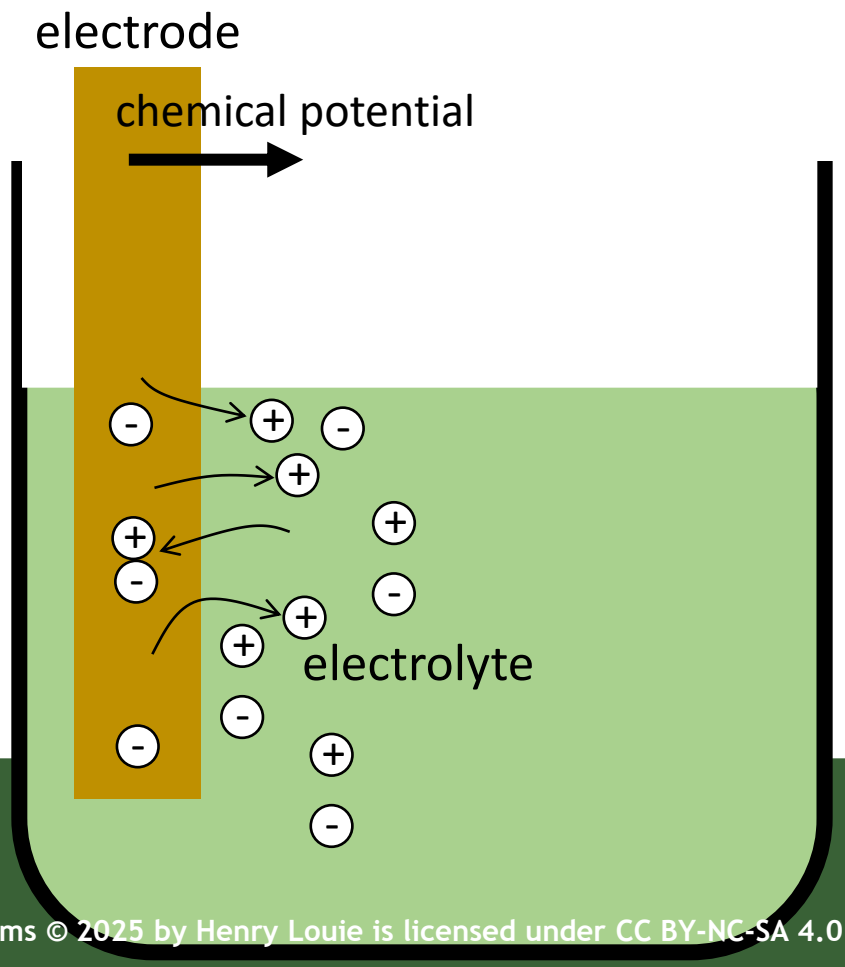

10-Off-Grid Energy Storage Systems © 2025 by Henry Louie is licensed under CC BY-NC-SA 4.0 www.drhenrylouie.com

Electrical Potential

Charge imbalance creates an electrostatic field

Electric field makes it "harder" for positive charge to leave electrode

Chemical potential balances the electrical potential

Voltage difference exists between electrode and electrolyte

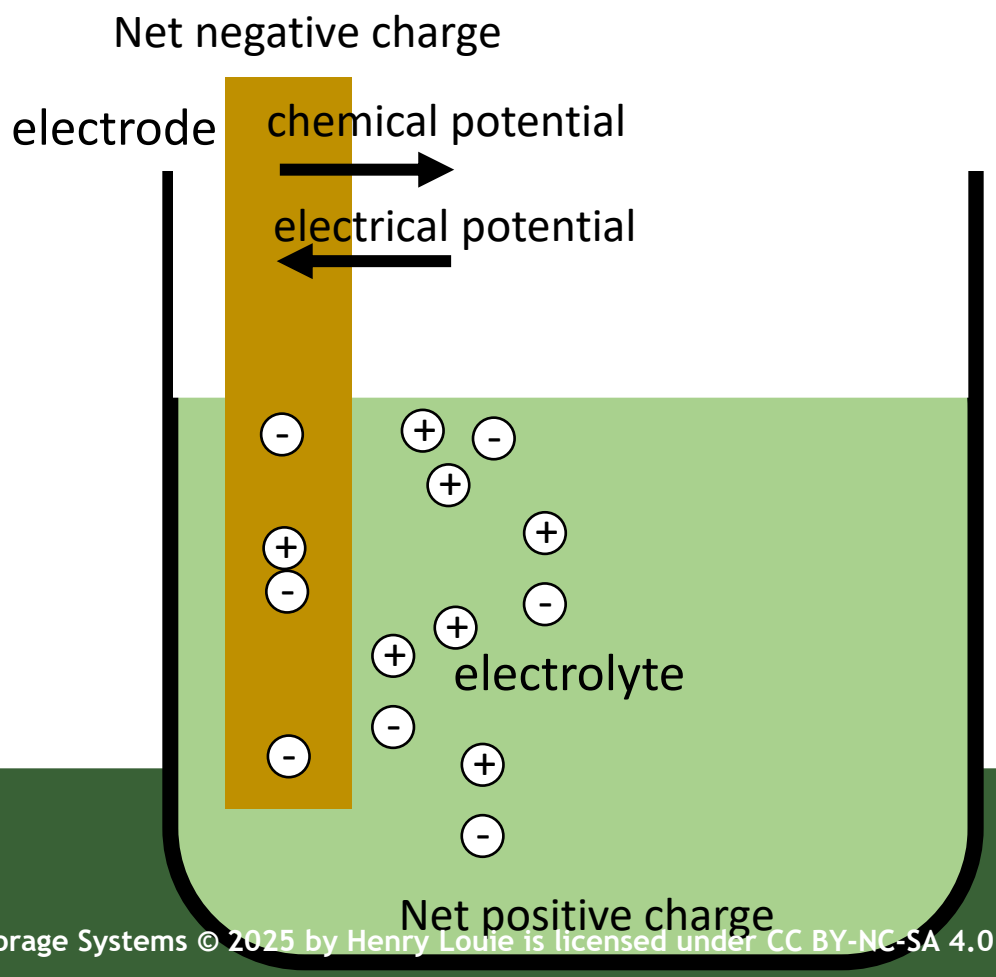

10-Off-Grid Energy Storage Systems © 2025 by Henry Louie is licensed under CC BY-NC-SA 4.0 www.drhenrylouie.com

Electrical Potential

Now add another electrode

Arbitrarily assume chemical potential as shown

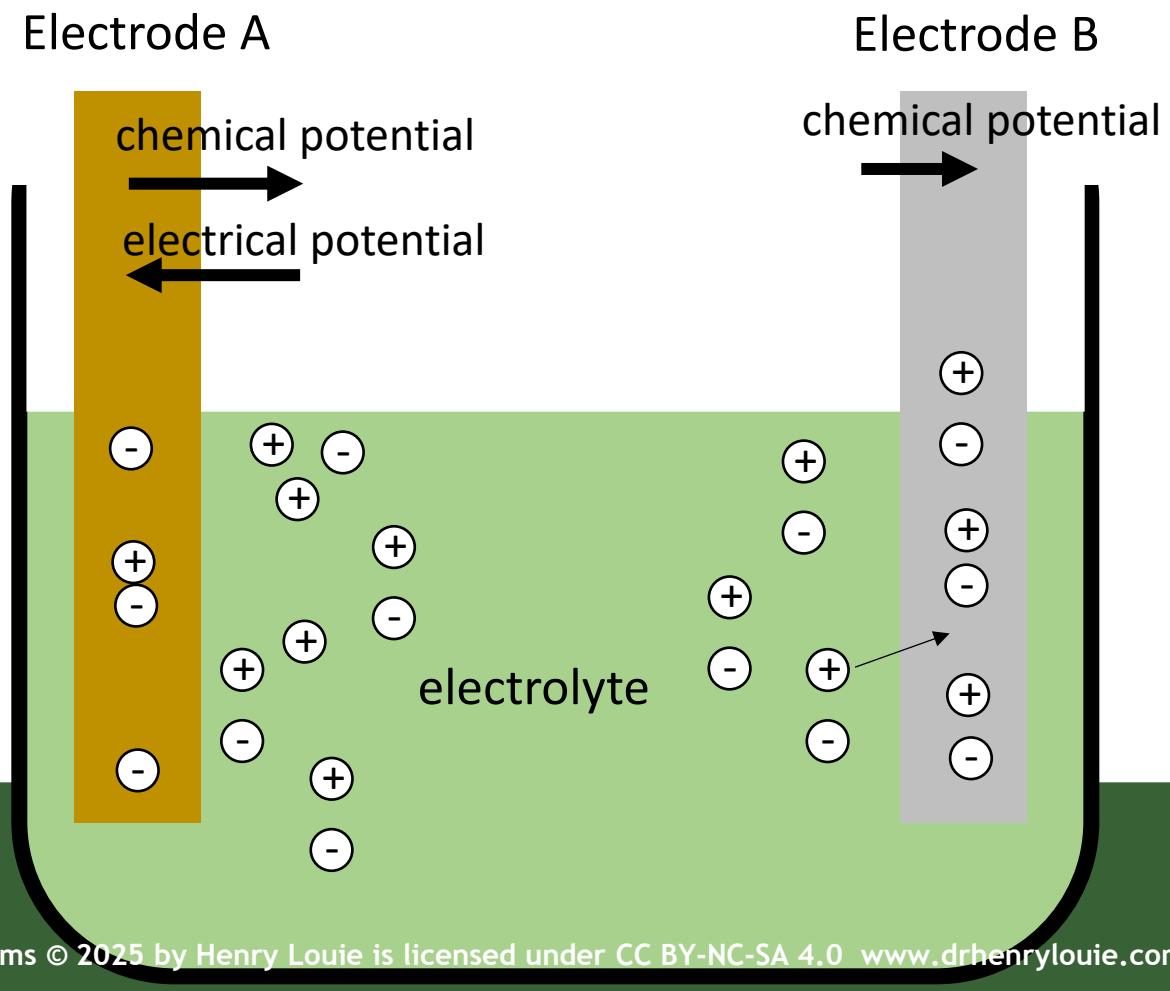

10-Off-Grid Energy Storage Systems © 2025 by Henry Louie is licensed under CC BY-NC-SA 4.0 www.drhenrylouie.com

Electrical Potential

Electrode B electrical potential balances chemical potential

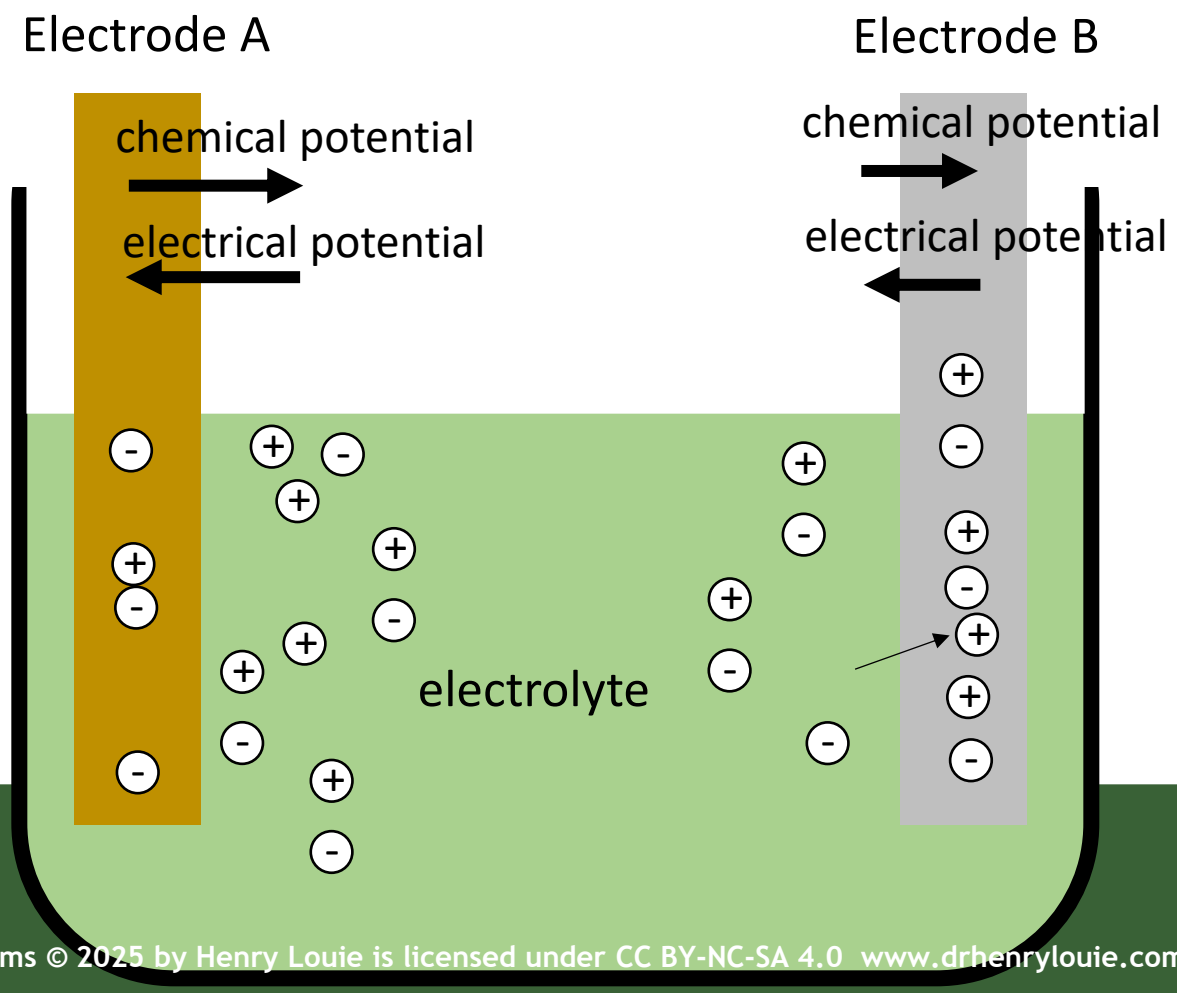

10-Off-Grid Energy Storage Systems © 2025 by Henry Louie is licensed under CC BY-NC-SA 4.0 www.drhenrylouie.com

Supplying Current

Now connect electrodes

Electrons flow from
Electrode A to Electrode B

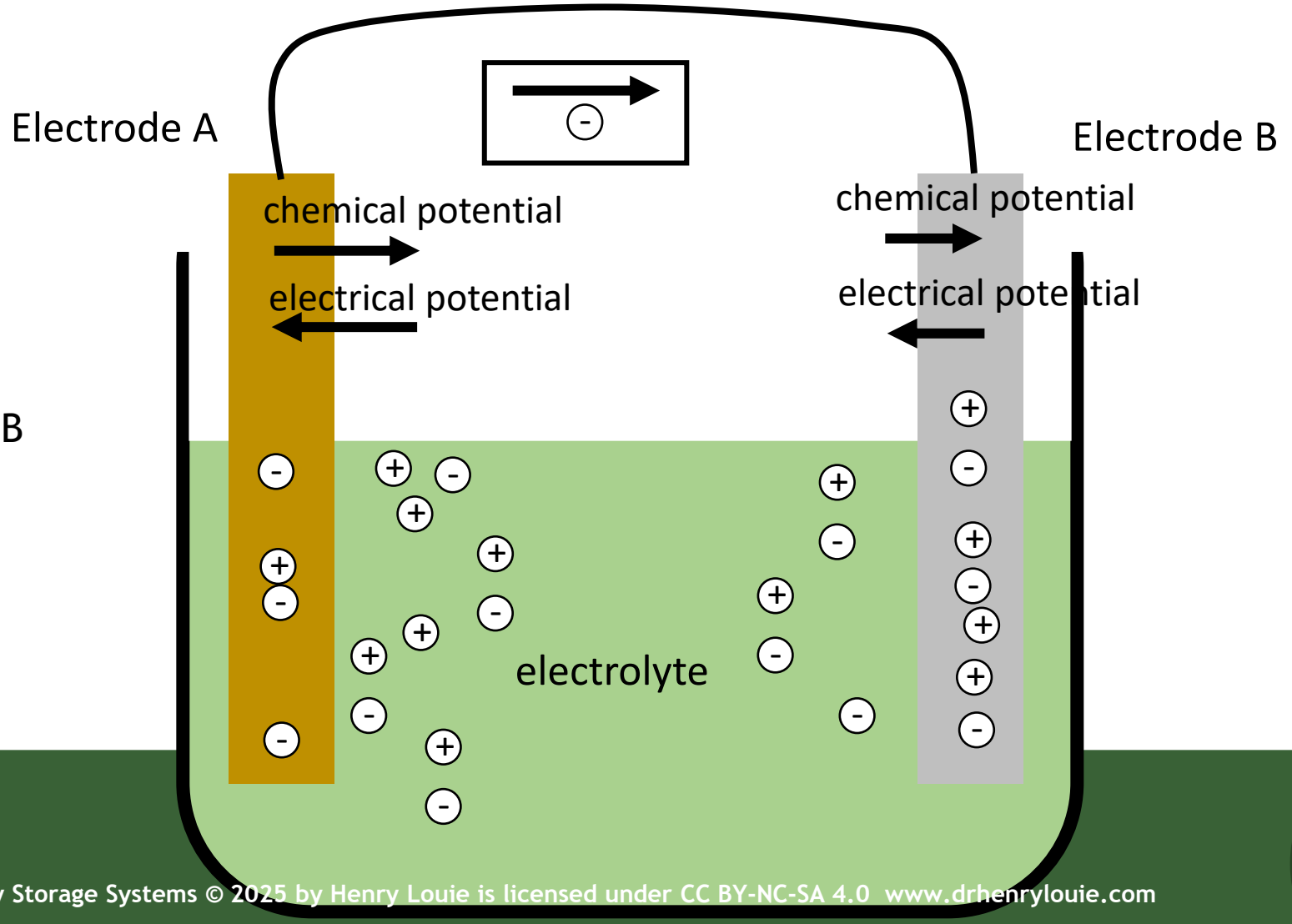

10-Off-Grid Energy Storage Systems © 2025 by Henry Louie is licensed under CC BY-NC-SA 4.0 www.drhenrylouie.com

Supplying Current

Now connect electrodes

Electrons flow from
Electrode A to Electrode B

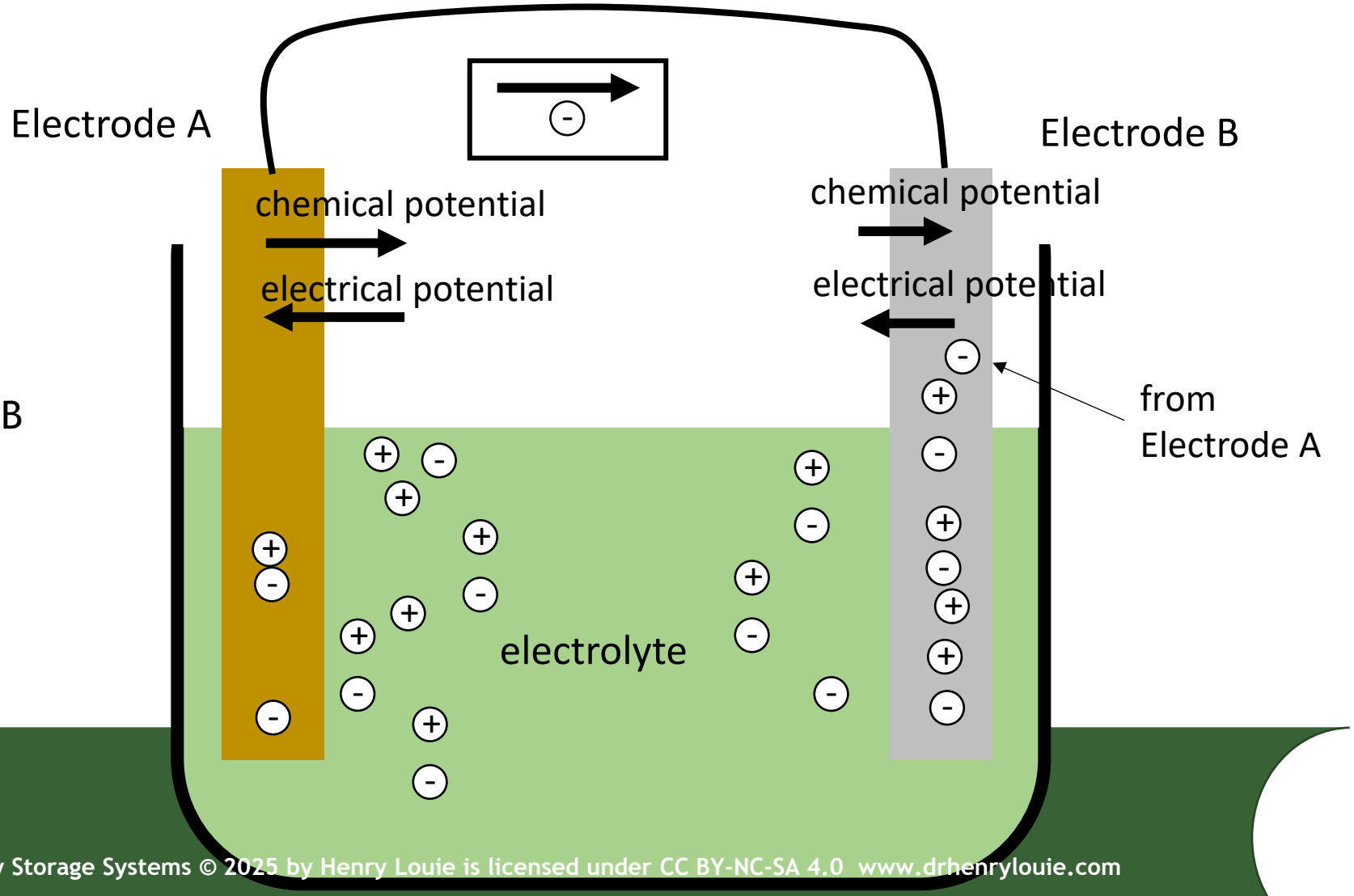

10-Off-Grid Energy Storage Systems © 2025 by Henry Louie is licensed under CC BY-NC-SA 4.0 www.drhenrylouie.com

Supplying Current

Electric potential weakens at each electrode, allowing additional charge transfer to/from the electrolyte via the chemical potential

Process continues as long as electrode/electrolyte interfaces are intact and electrolyte can transfer ions

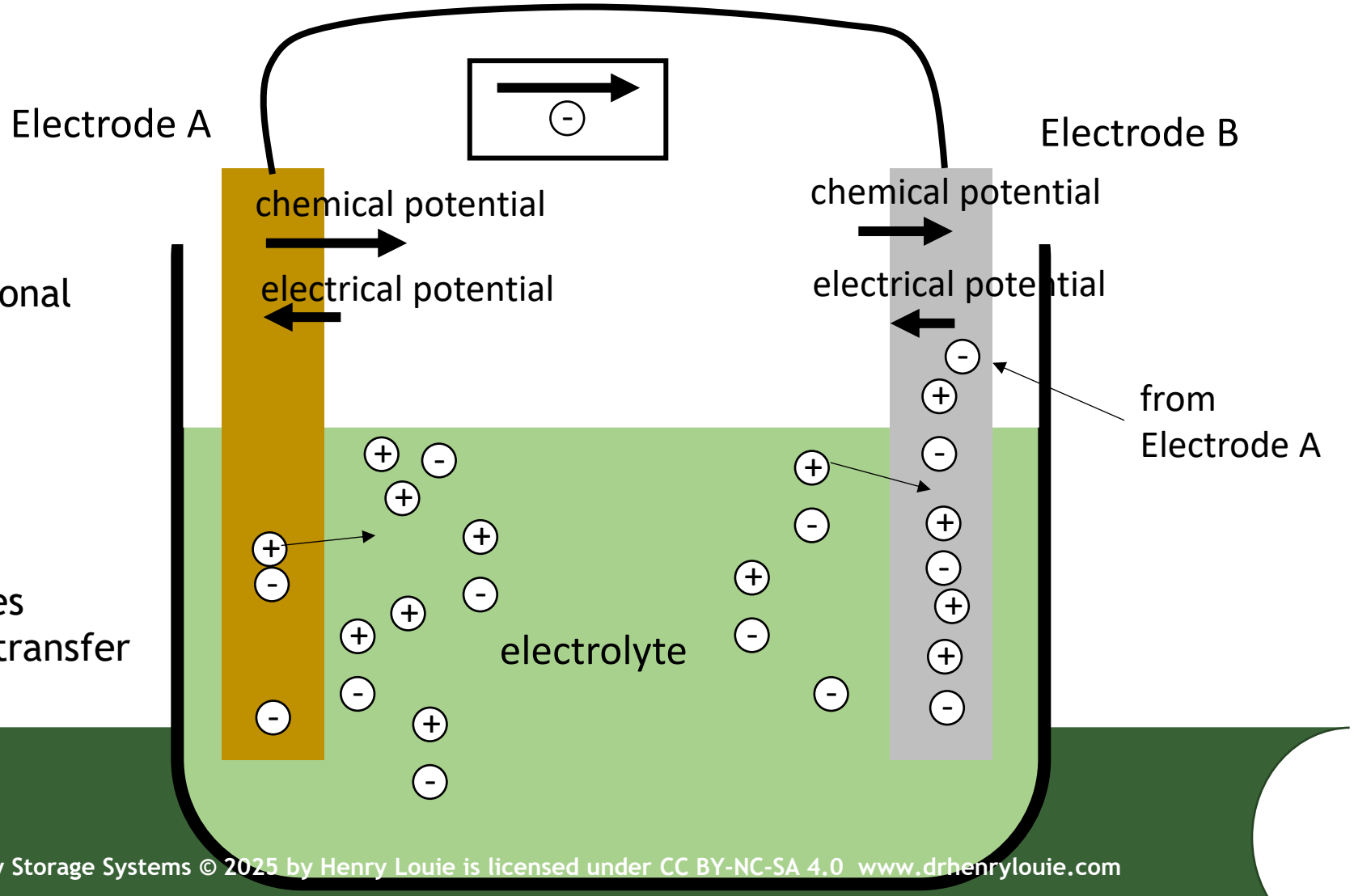

10-Off-Grid Energy Storage Systems © 2025 by Henry Louie is licensed under CC BY-NC-SA 4.0 www.drhenrylouie.com

Electrochemistry

- The preceding is a rather simplistic description of how charge separation occurs
- Several other mechanisms occur including:
  - adsorption of charge particles at the interface
  - orientation of dipoles
  - formulation of an electrical double layer at the interface

10-Off-Grid Energy Storage Systems © 2025 by Henry Louie is licensed under CC BY-NC-SA 4.0 www.drhenrylouie.com

Making a Battery

- Batteries (cells) can be constructed from many different chemicals, although not all combinations are useful or practical
- Examples:
  - Zinc-Carbon: used in inexpensive “dry cell” batteries
    - zinc anode, manganese dioxide (with carbon rod) cathode, ammonium chloride electrolyte
  - Alkaline:
    - zinc powder anode, manganese dioxide mixture cathode, potassium hydroxide electrolyte

By Mcy jerry, CC BY 2.5, https://commons.wikimedia.org/w/index.php?curid=22406581

10-Off-Grid Energy Storage Systems © 2025 by Henry Louie is licensed under CC BY-NC-SA 4.0 www.drhenrylouie.com

What Voltage is Produced?

- Electrochemists empirically measure voltage from different cell types and tabulate results
- Each half-reaction is measured in reference to a “standard hydrogen electrode” (SHE)
- Measured voltage is known as the “standard cell potential” E^0_{cell}

10-Off-Grid Energy Storage Systems © 2025 by Henry Louie is licensed under CC BY-NC-SA 4.0 www.drhenrylouie.com

Cell Voltage

Voltage is an *intrinsic* property of the cell, which depends on:

- chemical composition
- “activity” (concentration)
- temperature

Tabulated voltages in reference to a hydrogen electrode under certain temperature and pressure conditions

- Temperature of 25 °C
- Pressure of 1 atm
- Effective concentration of 1 mol/dm^{-3}

Tabulated voltage for a lead-acid cell is ~2.04V

Reaction	E°/V
$Ac^{3+} + 3\,e \rightleftharpoons Ac$	−2.20
$Ag^{+} + e \rightleftharpoons Ag$	0.7996
$Ag^{2+} + e \rightleftharpoons Ag^{+}$	1.980
$Ag(ac) + e \rightleftharpoons Ag + (ac)^{-}$	0.643
$AgBr + e \rightleftharpoons Ag + Br^{-}$	0.07133
$AgBrO_3 + e \rightleftharpoons Ag + BrO_3^{-}$	0.546
$Ag_2C_2O_4 + 2\,e \rightleftharpoons 2\,Ag + C_2O_4^{2-}$	0.4647
$AgCl + e \rightleftharpoons Ag + Cl^{-}$	0.22233
$AgCN + e \rightleftharpoons Ag + CN^{-}$	−0.017
$Ag_2CO_3 + 2\,e \rightleftharpoons 2\,Ag + CO_3^{2-}$	0.47
$Ag_2CrO_4 + 2\,e \rightleftharpoons 2\,Ag + CrO_4^{2-}$	0.4470
$AgF + e \rightleftharpoons Ag + F^{-}$	0.779
$Ag_4[Fe(CN)_6] + 4\,e \rightleftharpoons 4\,Ag + [Fe(CN)_6]^{4-}$	0.1478
$AgI + e \rightleftharpoons Ag + I^{-}$	−0.15224
$AgIO_3 + e \rightleftharpoons Ag + IO_3^{-}$	0.354
$Ag_2MoO_4 + 2\,e \rightleftharpoons 2\,Ag + MoO_4^{2-}$	0.4573
$AgNO_2 + e \rightleftharpoons Ag + 2\,NO_2^{-}$	0.564
$Ag_2O + H_2O + 2\,e \rightleftharpoons 2\,Ag + 2\,OH^{-}$	0.342
$Ag_2O_3 + H_2O + 2\,e \rightleftharpoons 2\,AgO + 2\,OH^{-}$	0.739
$Ag^{3+} + 2\,e \rightleftharpoons Ag^{+}$	1.9
$Ag^{3+} + e \rightleftharpoons Ag^{2+}$	1.8
$Ag_2O_2 + 4\,H^{+} + e \rightleftharpoons 2\,Ag + 2\,H_2O$	1.802
$2\,AgO + H_2O + 2\,e \rightleftharpoons Ag_2O + 2\,OH^{-}$	0.607
$AgOCN + e \rightleftharpoons Ag + OCN^{-}$	0.41
$Ag_2S + 2\,e \rightleftharpoons 2\,Ag + S^{2-}$	−0.691
$Ag_2S + 2\,H^{+} + 2\,e \rightleftharpoons 2\,Ag + H_2S$	−0.0366
$AgSCN + e \rightleftharpoons Ag + SCN^{-}$	0.08951
$Ag_2SeO_3 + 2\,e \rightleftharpoons 2\,Ag + SeO_4^{2-}$	0.3629
$Ag_2SO_4 + 2\,e \rightleftharpoons 2\,Ag + SO_4^{2-}$	0.654
$Ag_2WO_4 + 2\,e \rightleftharpoons 2\,Ag + WO_4^{2-}$	0.4660
$Al^{3+} + 3\,e \rightleftharpoons Al$	−1.662
$Al(OH)_3 + 3\,e \rightleftharpoons Al + 3\,OH^{-}$	−2.31
$Al(OH)_4^{-} + 3\,e \rightleftharpoons Al + 4\,OH^{-}$	−2.328
$H_2AlO_3^{-} + H_2O + 3\,e \rightleftharpoons Al + 4\,OH^{-}$	−2.33
$AlF_6^{3-} + 3\,e \rightleftharpoons Al + 6\,F^{-}$	−2.069
$Am^{4+} + e \rightleftharpoons Am^{3+}$	2.60

Reaction	E°/V
$As + 3\,H^{+} + 3\,e \rightleftharpoons AsH_3$	−0.608
$As_2O_3 + 6\,H^{+} + 6\,e \rightleftharpoons 2\,As + 3\,H_2O$	0.234
$HAsO_2 + 3\,H^{+} + 3\,e \rightleftharpoons As + 2\,H_2O$	0.248
$AsO_2^{-} + 2\,H_2O + 3\,e \rightleftharpoons As + 4\,OH^{-}$	−0.68
$H_3AsO_4 + 2\,H^{+} + 2\,e^{-} \rightleftharpoons HAsO_2 + 2\,H_2O$	0.560
$AsO_4^{3-} + 2\,H_2O + 2\,e \rightleftharpoons AsO_2^{-} + 4\,OH^{-}$	−0.71
$At_2 + 2\,e \rightleftharpoons 2\,At^{-}$	0.3
$Au^{+} + e \rightleftharpoons Au$	1.692
$Au^{3+} + 2\,e \rightleftharpoons Au^{+}$	1.401
$Au^{3+} + 3\,e \rightleftharpoons Au$	1.498
$Au^{2+} + e^{-} \rightleftharpoons Au^{+}$	1.8
$AuOH^{2+} + H^{+} + 2\,e \rightleftharpoons Au^{+} + H_2O$	1.32
$AuBr_2^{-} + e \rightleftharpoons Au + 2\,Br^{-}$	0.959
$AuBr_4^{-} + 3\,e \rightleftharpoons Au + 4\,Br^{-}$	0.854
$AuCl_4^{-} + 3\,e \rightleftharpoons Au + 4\,Cl^{-}$	1.002
$Au(OH)_3 + 3\,H^{+} + 3\,e \rightleftharpoons Au + 3\,H_2O$	1.45
$H_2BO_3^{-} + 5\,H_2O + 8\,e \rightleftharpoons BH_4^{-} + 8\,OH^{-}$	−1.24
$H_2BO_3^{-} + H_2O + 3\,e \rightleftharpoons B + 4\,OH^{-}$	−1.79
$H_3BO_3 + 3\,H^{+} + 3\,e \rightleftharpoons B + 3\,H_2O$	−0.8698
$B(OH)_3 + 7\,H^{+} + 8\,e \rightleftharpoons BH_4^{-} + 3\,H_2O$	−0.481
$Ba^{2+} + 2\,e \rightleftharpoons Ba$	−2.912
$Ba^{2+} + 2\,e \rightleftharpoons Ba(Hg)$	−1.570
$Ba(OH)_2 + 2\,e \rightleftharpoons Ba + 2\,OH^{-}$	−2.99
$Be^{2+} + 2\,e \rightleftharpoons Be$	−1.847
$Be_2O_3^{2-} + 3\,H_2O + 4\,e \rightleftharpoons 2\,Be + 6\,OH^{-}$	−2.63
p–benzoquinone + $2\,H^{+} + 2\,e \rightleftharpoons$ hydroquinone	0.6992
$Bi^{+} + e \rightleftharpoons Bi$	0.5
$Bi^{3+} + 3\,e \rightleftharpoons Bi$	0.308
$Bi^{3+} + 2\,e \rightleftharpoons Bi^{+}$	0.2
$Bi + 3\,H^{+} + 3\,e \rightleftharpoons BiH_3$	−0.8
$BiCl_4^{-} + 3\,e \rightleftharpoons Bi + 4\,Cl^{-}$	0.16
$Bi_2O_3 + 3\,H_2O + 6\,e \rightleftharpoons 2\,Bi + 6\,OH^{-}$	−0.46
$Bi_2O_4 + 4\,H^{+} + 2\,e \rightleftharpoons 2\,BiO^{+} + 2\,H_2O$	1.593
$BiO^{+} + 2\,H^{+} + 3\,e \rightleftharpoons Bi + H_2O$	0.320
$BiOCl + 2\,H^{+} + 3\,e \rightleftharpoons Bi + Cl^{-} + H_2O$	0.1583

10-Off-Grid Energy Storage Systems © 2025 by Henry Louie is licensed under CC BY-NC-SA 4.0 www.drhenrylouie.com

Adapted from *Electrochemical Series*, by Petr Vanýsek

Cell Voltage

- Just like Standard Test Conditions (STC) for PV modules, most of the time we expect the battery to be in a state or environment that is different from which the standard cell potential was measured
- Need to adjust the standard cell potential
  - temperature
  - concentration
- Use the *Nernst Equation*

10-Off-Grid Energy Storage Systems © 2025 by Henry Louie is licensed under CC BY-NC-SA 4.0 www.drhenrylouie.com

The Nernst equation

- Relates voltage under standard conditions to non-standard conditions (like those encountered outside the laboratory)

$$E_{cell} = E^0_{cell} - \left(\frac{RT}{nF}\right)\ln\left(Q_r\right)$$

- Note:
  - natural logarithm introduces non-linearity
  - voltage dependence on reaction and chemicals involved, as well as their "activities" (concentration)
  - voltage dependence on temperature

E^0_{cell}: tabulated voltage (V)
R: Universal Gas Constant (8.314 J/mol/K)
T: temperature (K)
F: Faraday Constant (96,485 C/mol)
n: moles of electrons transferred in the reaction
Q_r: reaction quotient

10-Off-Grid Energy Storage Systems © 2025 by Henry Louie is licensed under CC BY-NC-SA 4.0 www.drhenrylouie.com

Reaction Quotient (Q_r)

- Reaction quotient: measure of the relative amounts of products and reactants in a reaction at a certain point in time
- Reaction quotient is useful in predicting the direction of a chemical reaction as it evolves toward equilibrium---however, we are mostly interested in the reaction quotient it because it is how the concentration of the chemicals is accounted for in the Nernst equation
- Consider the generic reaction:

$$\underbrace{aA + bB}_{\text{reactants}} \rightleftarrows \underbrace{cC + dD}_{\text{products}}$$

$$Q_r = \frac{\alpha_C^c \alpha_D^d}{\alpha_A^a \alpha_B^b}$$

10-Off-Grid Energy Storage Systems © 2025 by Henry Louie is licensed under CC BY-NC-SA 4.0 www.drhenrylouie.com

Calculating the Reaction Quotient

Consider the generic reaction:

$$\underbrace{aA + bB}_{\text{reactants}} \rightleftarrows \underbrace{cC + dD}_{\text{products}}$$

Example

$$N_2(g) + 3H_2(aq) \rightleftarrows 2NH_3$$

a: 1
b: 3
c: 2
there is no d

A: N_2 (nitrogen)
B: H_2 (hydrogen)
C: NH_3 (Ammonia)
there is no D

If there are greater than two products or reactants, just add letters (e.g. *e*E, *f*F).
If there are fewer than two productors or reactants, remove letters

10-Off-Grid Energy Storage Systems © 2025 by Henry Louie is licensed under CC BY-NC-SA 4.0 www.drhenrylouie.com

Calculating the Reaction Quotient

The reaction quotient is:

$$Q_r = \frac{\alpha_C^c \alpha_D^d}{\alpha_A^a \alpha_B^b}$$

$$\underbrace{aA + bB}_{\text{reactants}} \rightleftarrows \underbrace{cC + dD}_{\text{products}}$$

The α_i is the activity (<u>effective concentration</u>) of chemical *i*

Effective concentration of solids and pure water is 1.0.

For our purposes, we will use assume the effective concentration is equal to the concentration (moles per liter), but this assumption introduces some error

10-Off-Grid Energy Storage Systems © 2025 by Henry Louie is licensed under CC BY-NC-SA 4.0 www.drhenrylouie.com

Example 10.2

Let the standard cell voltage for a lead-acid cell be 2.04 V. The battery is fully charged so the concentration of the sulfuric acid in the electrolyte is 6 moles per liter. Compute the corresponding cell voltage. Assume the temperature of the battery is 25 ^{o}C.

10-Off-Grid Energy Storage Systems © 2025 by Henry Louie is licensed under CC BY-NC-SA 4.0 www.drhenrylouie.com

Example 10.2

- First, write out the reaction for lead acid batteries:

$$PbO_2 + Pb + 2H_2SO_4 \rightleftarrows 2PbSO_4 + 2H_2O$$

- Next, assign values to the letters in the reaction quotient:

$$aA + bB + eE \rightleftarrows cC + dD$$

a: 1	A: PbO_2
b: 1	B: Pb
e: 2	E: $2H_2SO_4$
c: 2	C: $2PbSO_4$
d: 2	D: $2H_2O$

10-Off-Grid Energy Storage Systems © 2025 by Henry Louie is licensed under CC BY-NC-SA 4.0 www.drhenrylouie.com

Example 10.2

Now determine the activities of the chemicals

$$PbO_2 + Pb + 2H_2SO_4 \rightleftarrows 2PbSO_4 + 2H_2O$$

a: 1	A: PbO_2	α_A: 1 (solid)
b: 1	B: Pb	α_B: 1 (solid)
e: 2	E: $2H_2SO_4$	α_E: 6 (per problem statement)
c: 2	C: $2PbSO_4$	α_C: 1 (solid)
d: 2	D: $2H_2O$	α_D: 1 (liquid)

10-Off-Grid Energy Storage Systems © 2025 by Henry Louie is licensed under CC BY-NC-SA 4.0 www.drhenrylouie.com

Example 10.2

Now compute the reaction quotient

$$Q_r = \frac{\alpha_C^c \alpha_D^d}{\alpha_A^a \alpha_B^b \alpha_E^e} = \frac{1^2 \times 1^2}{1^1 \times 1^1 \times 6^2} = \frac{1}{36}$$

a: 1
b: 1
e: 2
c: 2
d: 2

A: PbO_2
B: Pb
E: $2H_2SO_4$
C: $2PbSO_4$
D: $2H_2O$

α_A: 1 (solid)
α_B: 1 (solid)
α_E: 6 (per problem statement)
α_C: 1 (solid)
α_D: 1 (liquid)

10-Off-Grid Energy Storage Systems © 2025 by Henry Louie is licensed under CC BY-NC-SA 4.0 www.drhenrylouie.com

Example 10.2

Finally, apply the Nernst equation:

$$E_{cell} = E^0_{cell} - \left(\frac{RT}{nF}\right)\ln(Q_r)$$

$$E_{cell} = 2.04 - \left(\frac{8.314 \times 298.15}{2 \times 96,485}\right)\ln\left(\frac{1}{36}\right) = 2.086 \text{ V}$$

E^0_{cell}: tabulated voltage (V)
R: Universal Gas Constant (8.314 J/mol/K)
T: temperature (K)
F: Faraday Constant (96,485 C/mol)
n: moles of electrons transferred in the reaction
Q_r: reaction quotient

If this was a 12 V battery (6 series cells), the voltage would be approx. 12.52 V

10-Off-Grid Energy Storage Systems © 2025 by Henry Louie is licensed under CC BY-NC-SA 4.0 www.drhenrylouie.com

Cell Potential of Lead-Acid Cells

- Approximated cell potential of a lead-acid cell as a function of electrolyte concentration
- Note:
  - non-linear
  - sharp drop at low concentration

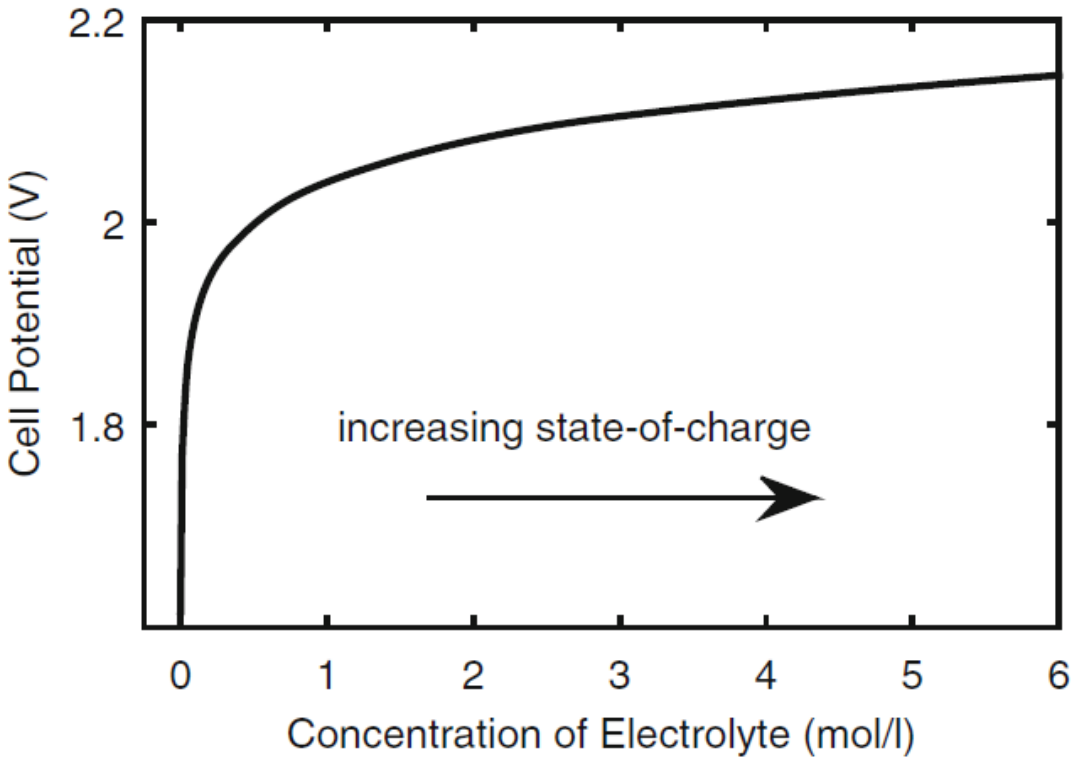

10-Off-Grid Energy Storage Systems © 2025 by Henry Louie is licensed under CC BY-NC-SA 4.0 www.drhenrylouie.com

Exercise

Consider the battery in the previous example (sulfuric acid concentration of 6 moles per liter). Compute the open-circuit voltage when the battery is at a higher temperature of 35 ^{o}C.

10-Off-Grid Energy Storage Systems © 2025 by Henry Louie is licensed under CC BY-NC-SA 4.0 www.drhenrylouie.com

Exercise

Consider the battery in the previous example (sulfuric acid concentration of 6 moles per liter). Compute the open-circuit voltage when the battery is at a higher temperature of 35 ^{o}C.

$$E_{\text{cell}} = E^{0}_{\text{cell}} - \left(\frac{RT}{nF}\right)\ln\left(Q_{\text{r}}\right)$$

$$E_{\text{cell}} = 2.04 - \left(\frac{8.314 \times 308.15}{2 \times 96,485}\right)\ln\left(\frac{1}{36}\right) = 2.088 \text{ V}$$

10-Off-Grid Energy Storage Systems © 2025 by Henry Louie is licensed under CC BY-NC-SA 4.0 www.drhenrylouie.com

Exercise

Decreasing the temperature of a lead-acid battery lowers its open-circuit voltage

A. True

B. False

C. It depends…

$$E_{\text{cell}} = E^{0}_{\text{cell}} - \left(\frac{RT}{nF}\right)\ln\left(Q_{\text{r}}\right)$$

10-Off-Grid Energy Storage Systems © 2025 by Henry Louie is licensed under CC BY-NC-SA 4.0 www.drhenrylouie.com

Exercise

Decreasing the temperature of a lead-acid battery lowers its open-circuit voltage

A. True

B. False

C. It depends…

$$E_{\text{cell}} = E^0_{\text{cell}} - \left(\frac{RT}{nF}\right)\ln\left(Q_r\right)$$

This is true most of the time, however, at very low sulfuric acid concentrations, Q_r can be positive so decreasing the temperature increases the voltage

10-Off-Grid Energy Storage Systems © 2025 by Henry Louie is licensed under CC BY-NC-SA 4.0 www.drhenrylouie.com

Discussion

What are the important considerations in selecting a lead-acid battery type for an off-grid system?

10-Off-Grid Energy Storage Systems © 2025 by Henry Louie is licensed under CC BY-NC-SA 4.0 www.drhenrylouie.com

Battery Characteristics

1. Open-Circuit Voltage
2. Current–Voltage Relationship
3. Battery Resistance
4. Charge Capacity & Energy Capacity
5. Cycle Life
6. Efficiency
7. Self-Discharge
8. Effect of Temperature

10-Off-Grid Energy Storage Systems © 2025 by Henry Louie is licensed under CC BY-NC-SA 4.0 www.drhenrylouie.com

Open-Circuit Voltage

- Open-circuit voltage refers to the voltage between the positive and negative terminals of a cell, battery, or battery bank
- Remember that batteries exhibit non-linear, temperature-dependent behavior, and have long time constants (before steady-state is reached)

10-Off-Grid Energy Storage Systems © 2025 by Henry Louie is licensed under CC BY-NC-SA 4.0 www.drhenrylouie.com

Open-Circuit Voltage

Open-circuit voltage can only reliably be used to estimate state-of-charge if the battery has been open-circuited, not hot or cold, and given enough time to “rest”

- resting allows the chemicals within the battery to mix/re-distribute, avoiding localized concentrations which affect voltage
- resting time required can be several minutes to several hours

10-Off-Grid Energy Storage Systems © 2025 by Henry Louie is licensed under CC BY-NC-SA 4.0 www.drhenrylouie.com

Open-Circuit Voltage

Open-circuit voltage at 100% state of charge is 13.15 V (2.19 V/cell)

Battery voltage drops suddenly when discharged, and rises when resting

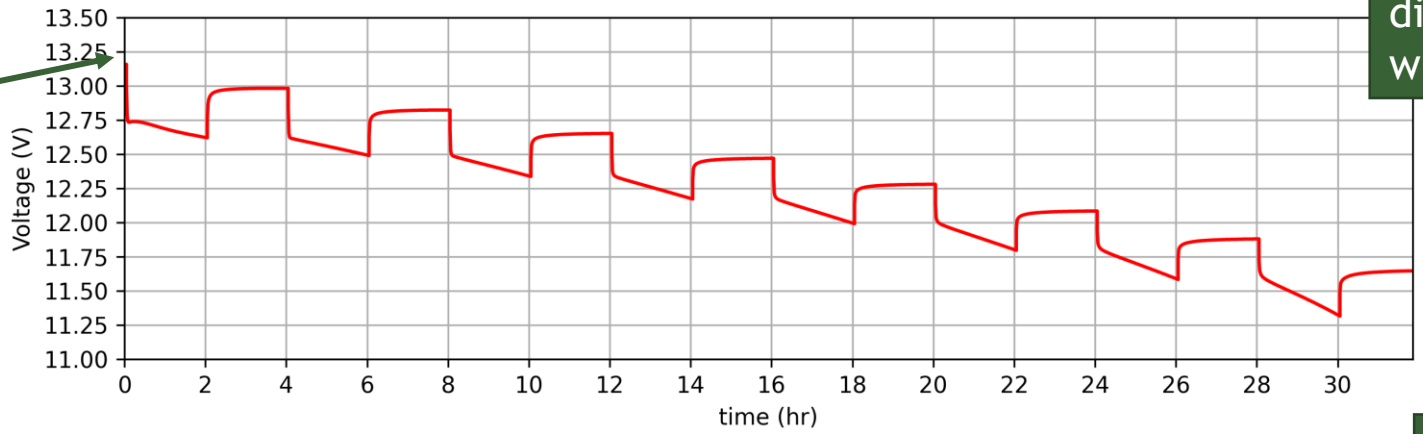

Each pulse reduces state of charge by 10%

Battery rests for 2 hours between pulses

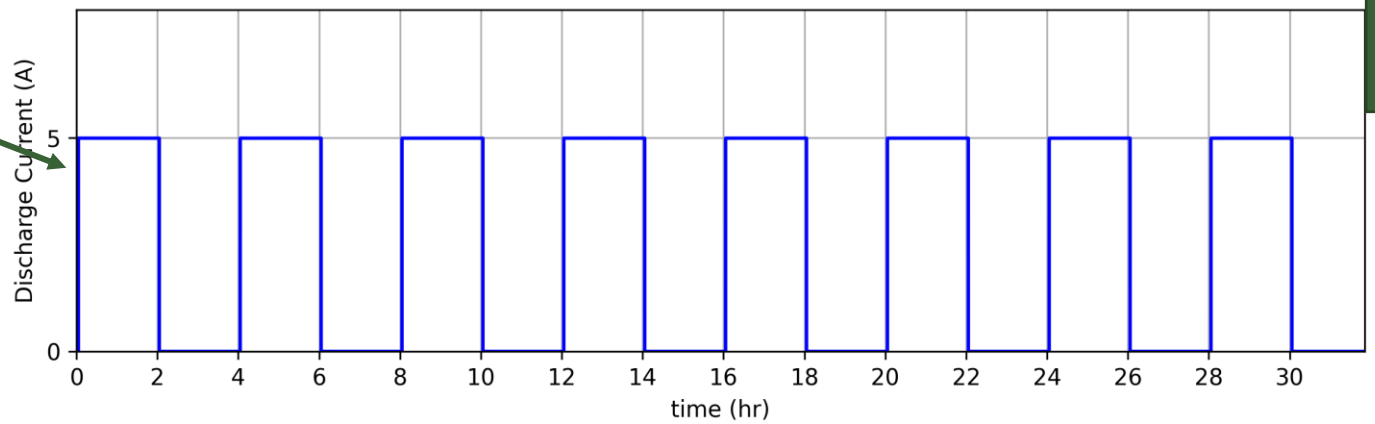

(12V, 100 Ah, AGM Battery)

10-Off-Grid Energy Storage Systems © 2025 by Henry Louie is licensed under CC BY-NC-SA 4.0 www.drhenrylouie.com

Open-Circuit Voltage

State-of-Charge	100%	90%	80%	70%	60%	50%	40%	30%	20%
Voltage	13.14	12.96	12.84	12.66	12.48	12.3	12.06	11.88	11.64

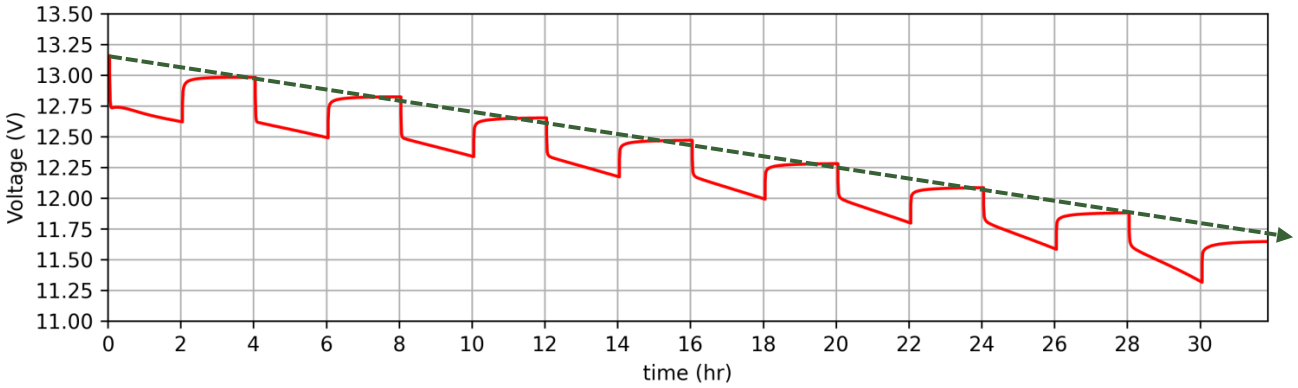

Open-circuit voltage decreases with state of charge

Each pulse reduces state of charge by ~10%

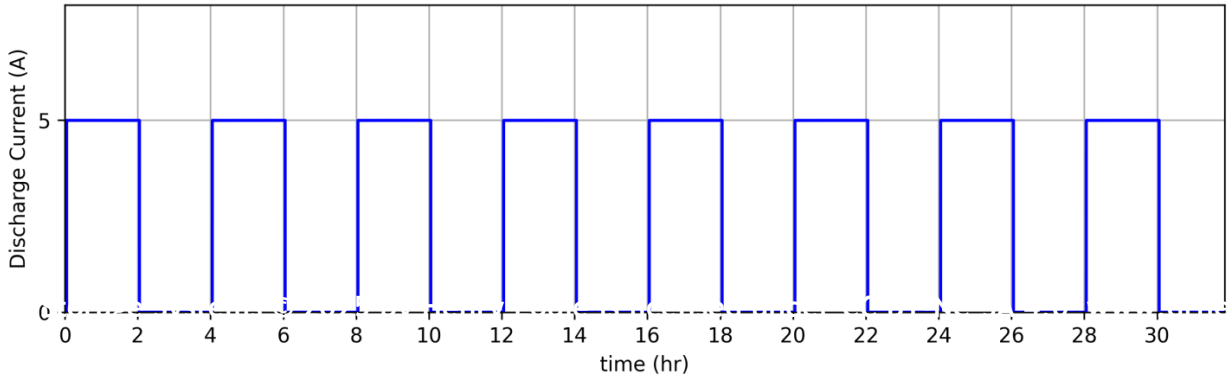

Nominal Voltage

- Cells, batteries, and battery banks are often referred to by their “nominal voltage”
  - automobile batteries are called “12 V” batteries
- Nominal voltage is not the same as the open-circuit voltage

10-Off-Grid Energy Storage Systems © 2025 by Henry Louie is licensed under CC BY-NC-SA 4.0 www.drhenrylouie.com

Nominal Voltage

- Nominal voltage: approximately equal to the average battery voltage during a charge and discharge cycle
  - Not: open-circuit voltage when fully charged or discharged
- Lead-acid batteries typically have nominal voltages of 2 V, 6 V, 12 V or 24 V
- Nominal voltage of a lithium-ion cell typically between 3.2 V and 3.8 V (depending on the chemistry used)
- Open-circuit voltage for a fully-charged lead-acid cell is approximately 2.10 V

10-Off-Grid Energy Storage Systems © 2025 by Henry Louie is licensed under CC BY-NC-SA 4.0 www.drhenrylouie.com

Nominal Voltage

A lead-acid battery with 24 V nominal voltage (12 cells in series) will have a fully-charged open-circuit voltage of approximately 12 x 2.11 = 25.32 V

Open-circuit cell voltage	Approximate state-of-charge (%)										
	0	10	20	30	40	50	60	70	80	90	100
Flooded (V/cell) (V/cell)	1.90	1.92	1.94	1.96	1.99	2.01	2.03	2.05	2.07	2.09	2.11
AGM (V/cell)	1.94	1.96	1.98	2.00	2.02	2.04	2.06	2.08	2.10	2.12	2.14

10-Off-Grid Energy Storage Systems © 2025 by Henry Louie is licensed under CC BY-NC-SA 4.0 www.drhenrylouie.com

Nominal Voltages

- Many off-grid components are rated to be compatible with voltages that are integer multiples of 12 V (e.g. an inverter may be rated at 12 V, 24 V, etc.)
  - due to historic dominance of lead-acid batteries
  - many are compatible with a range of voltage
- What about lithium-ion batteries whose nominal voltage does not correspond to these values?
  - $LiFePO_4$ nominal cell voltage is 3.2 V: how many should be connected in series to make a “24 V” battery?

10-Off-Grid Energy Storage Systems © 2025 by Henry Louie is licensed under CC BY-NC-SA 4.0 www.drhenrylouie.com

Nominal Voltages

Nominal Voltage	Lead-Acid		$LiFePO_4$	
	Voltage	No. Cells	Voltage	No. Cells
Cell	2	1	3.2	1
12	12	6	12.8	4
24	24	12	25.6	8
48	48	24	51.2	16

Note: a 48 V $LiFePO_4$ battery consists of 16 series-connected cells, even though 15 cells would yield a nominal voltage of exactly 48 V

10-Off-Grid Energy Storage Systems © 2025 by Henry Louie is licensed under CC BY-NC-SA 4.0 www.drhenrylouie.com

Nominal Voltages

- In other words, a “12 V” $LiFePO_4$ battery has an actual nominal voltage of 3.2 x 4 = 12.8 V
- Almost all “12 V” rated inverters and other components are compatible with this voltage
  - most 24 V rated components are compatible with 25.6 V $LiFePO_4$, and so on

10-Off-Grid Energy Storage Systems © 2025 by Henry Louie is licensed under CC BY-NC-SA 4.0 www.drhenrylouie.com

I-V Characteristic

- I-V characteristic shows how the *terminal* voltage (V_B) of the battery (cell) varies with charge/discharge current
- Note:
  - plot assumes the state-of-charge is constant at each point along the curve
  - non-linear dependence of terminal voltage with current
  - asymmetry

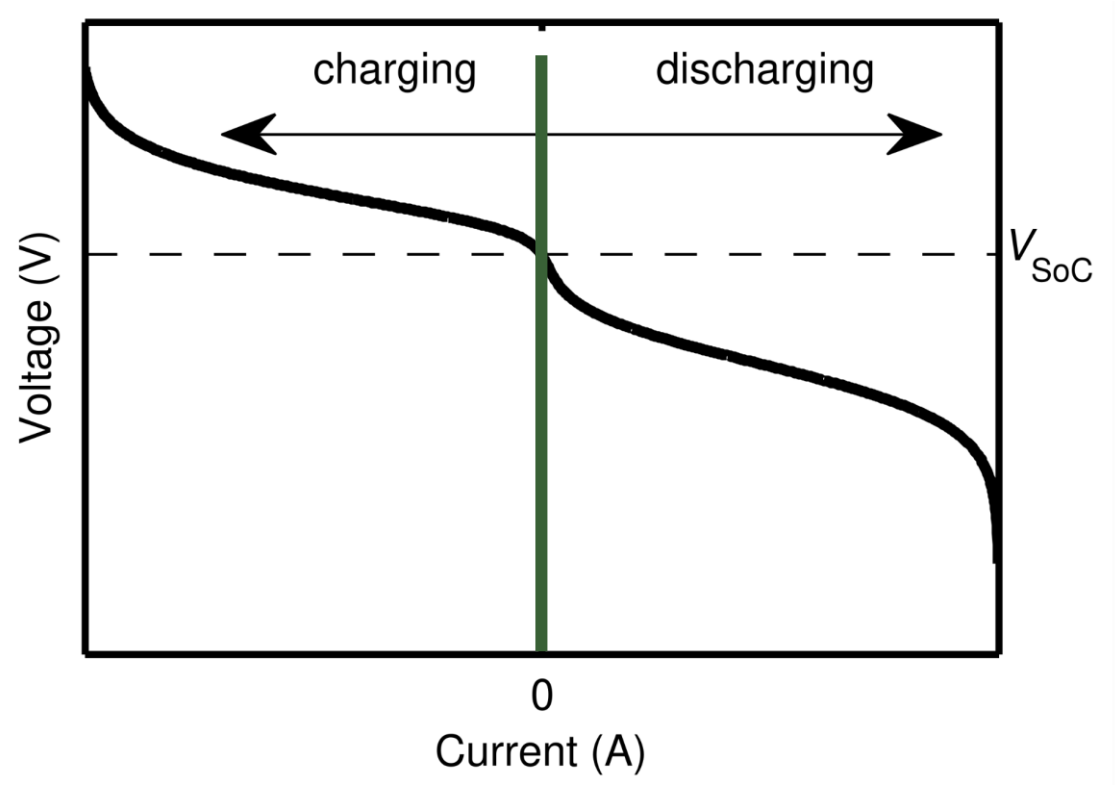

V_{SoC}: open-circuit voltage (State-of-Charge)

Don't confuse the x-axis with time

10-Off-Grid Energy Storage Systems © 2025 by Henry Louie is licensed under CC BY-NC-SA 4.0 www.drhenrylouie.com

I-V Characteristic

Important:

- Charging: terminal voltage is <u>increased</u> from open-circuit voltage
- Discharging: terminal voltage is <u>decreased</u> from open-circuit voltage

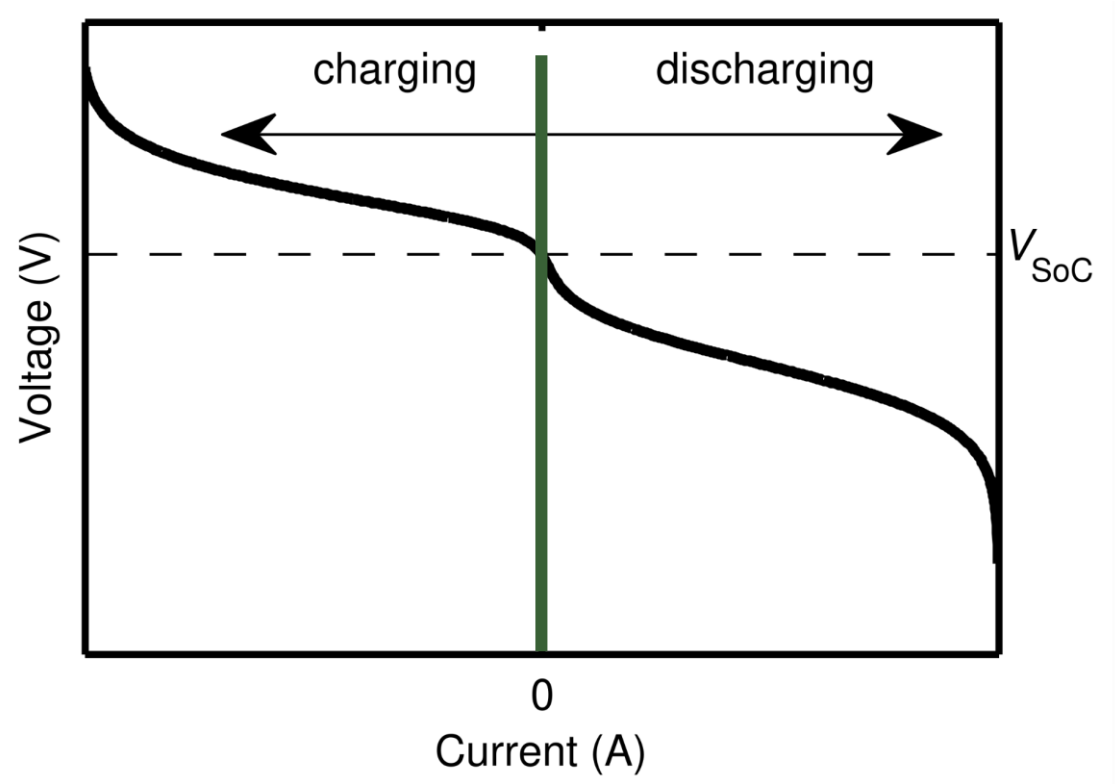

10-Off-Grid Energy Storage Systems © 2025 by Henry Louie is licensed under CC BY-NC-SA 4.0 www.drhenrylouie.com

Polarization

- Non-linearity of I-V curve can be attributed to three mechanisms (*polarizations*)
- *Ohmic*: voltage drop caused by the battery current passing through the electrode resistance and electrolyte resistance (difficulty of ions moving through electrolyte)
- *Activation*: related to the kinetics of the reactions, for there to be current the equilibrium balance of chemical and electrostatic potential must be upset (decreased voltage when discharging, increased when charging)
- *Concentration*: at higher current, localized depletion or accumulation of ions can occur, which, per the Nernst equation, will affect the cell voltage

10-Off-Grid Energy Storage Systems © 2025 by Henry Louie is licensed under CC BY-NC-SA 4.0 www.drhenrylouie.com

Polarizations

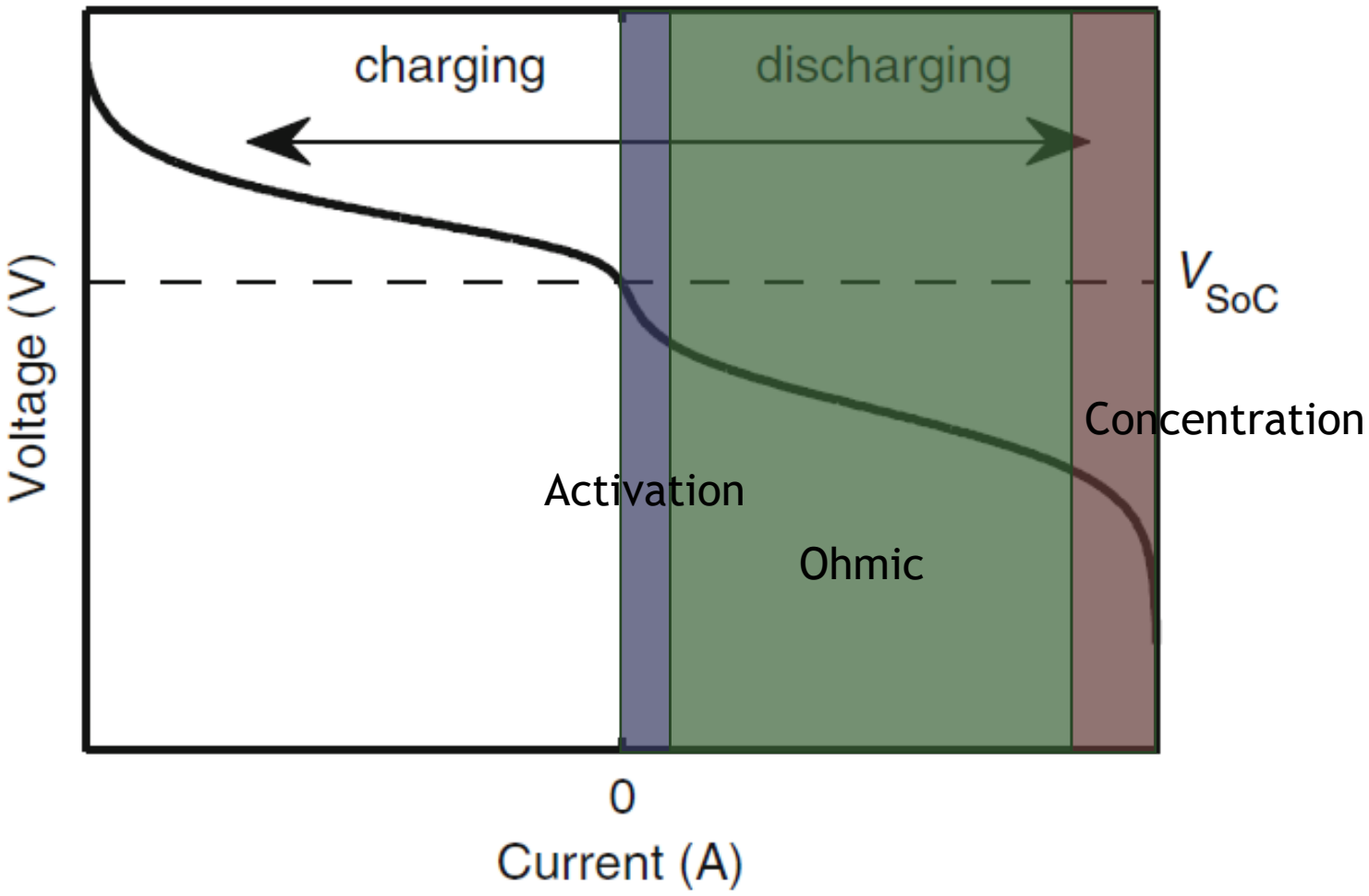

Only discharging shown, but analogous effects are present when charging

10-Off-Grid Energy Storage Systems © 2025 by Henry Louie is licensed under CC BY-NC-SA 4.0 www.drhenrylouie.com

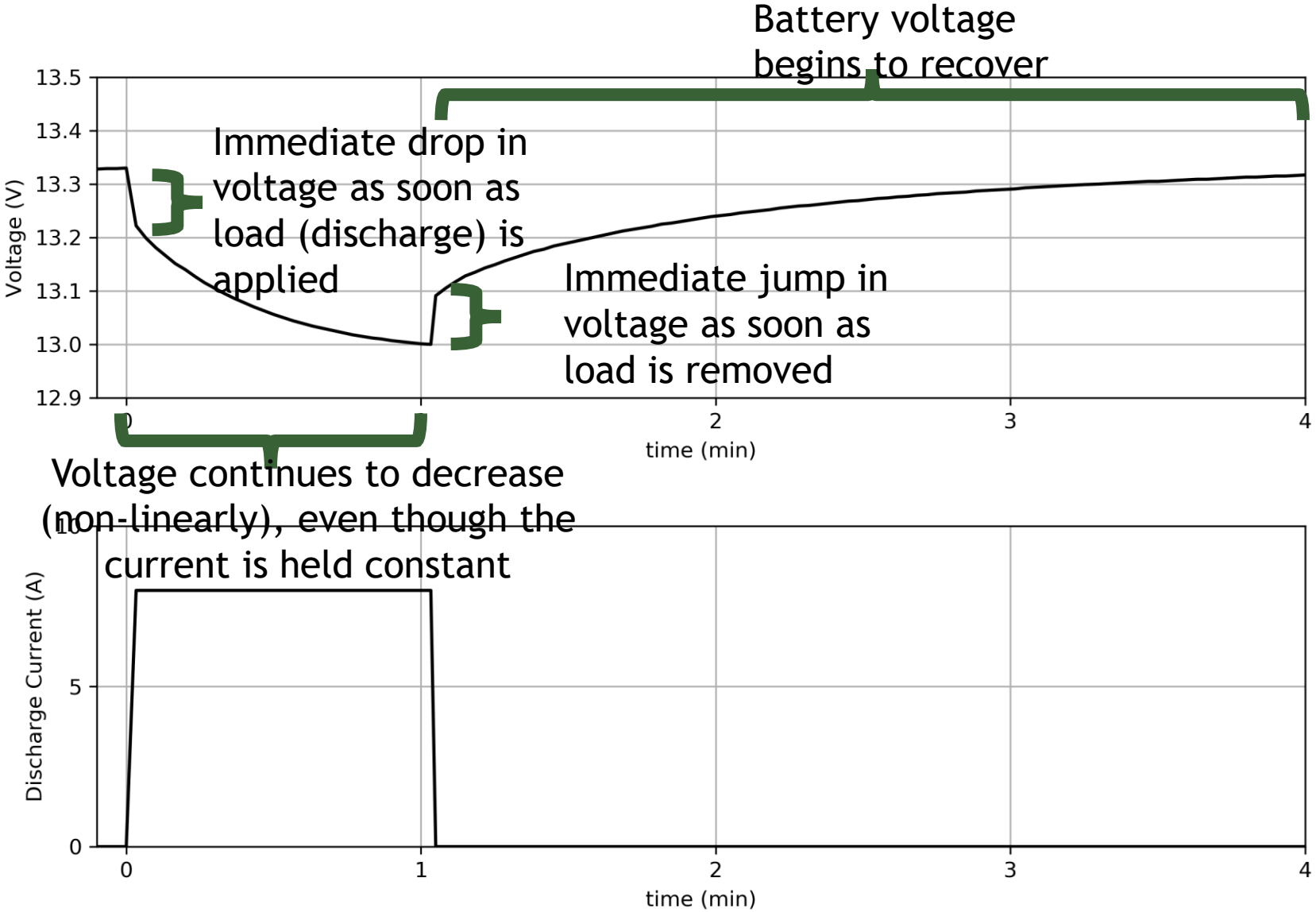

Battery voltage before and after a load of 8 A is drawn from the battery (12 V, 100 Ah, AGM Battery)

10-Off-Grid Energy Storage Systems © 2025 by Henry Louie is licensed under CC BY-NC-SA 4.0 www.drhenrylouie.com

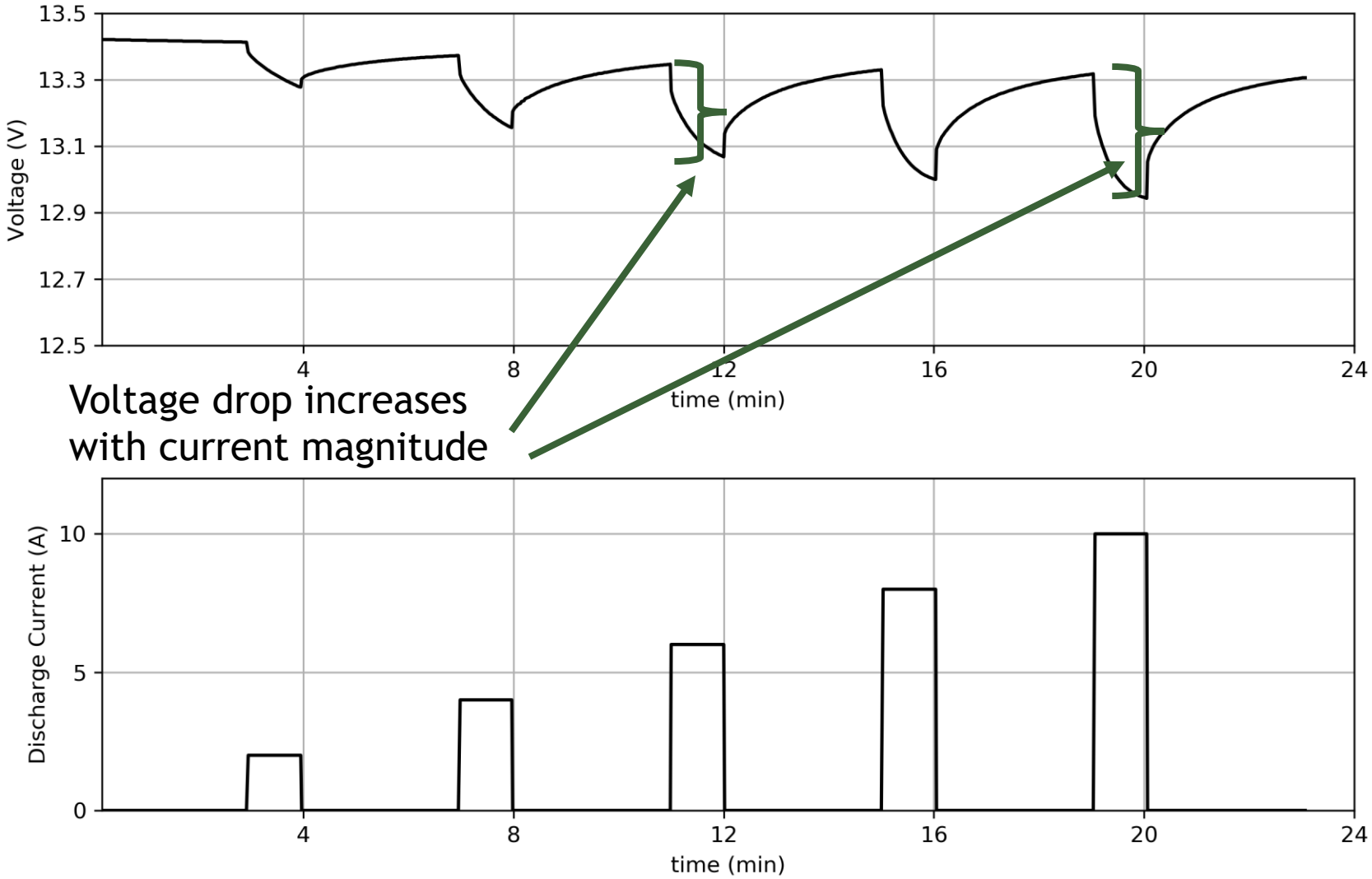

Battery voltage as succession of larger discharge current with 1 minute rest in between is applied
(12 V, 100 Ah, AGM Battery ~75% SoC)

10-Off-Grid Energy Storage Systems © 2025 by Henry Louie is licensed under CC BY-NC-SA 4.0 www.drhenrylouie.com

Notice the large rebound in voltage as soon as the load is removed.

Discharge cycling of battery. Pulses of load current increasing from 20 A to 56 A for 1 min., with approx. 3 min. rest in between.

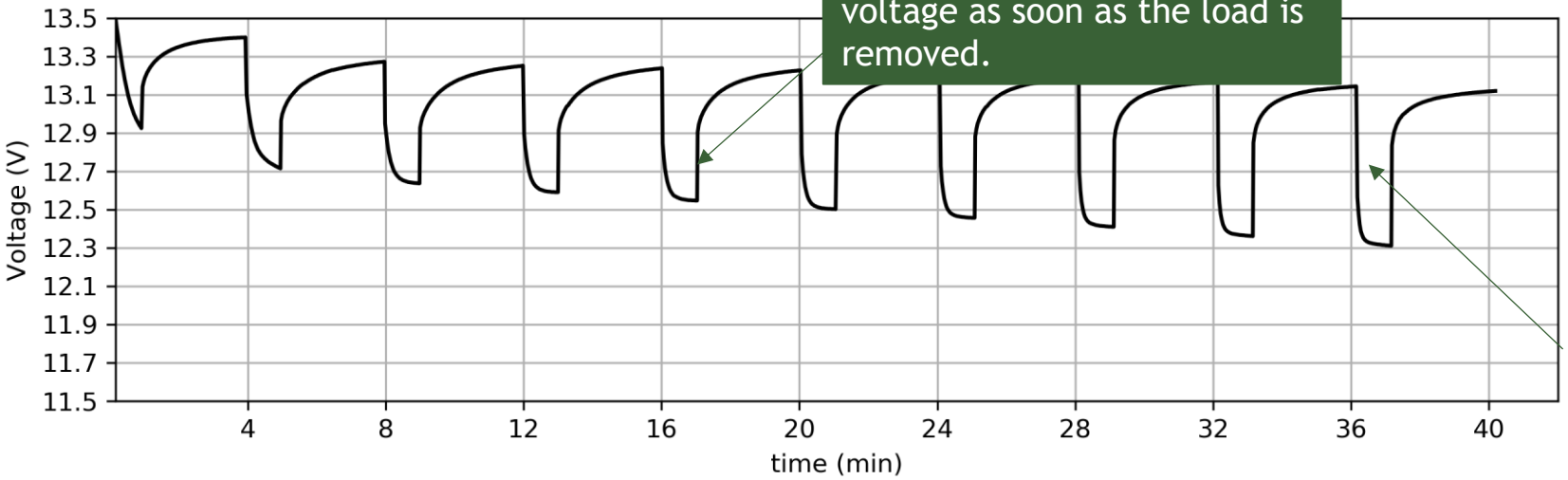

Magnitude of voltage drop and rebound increase with load current

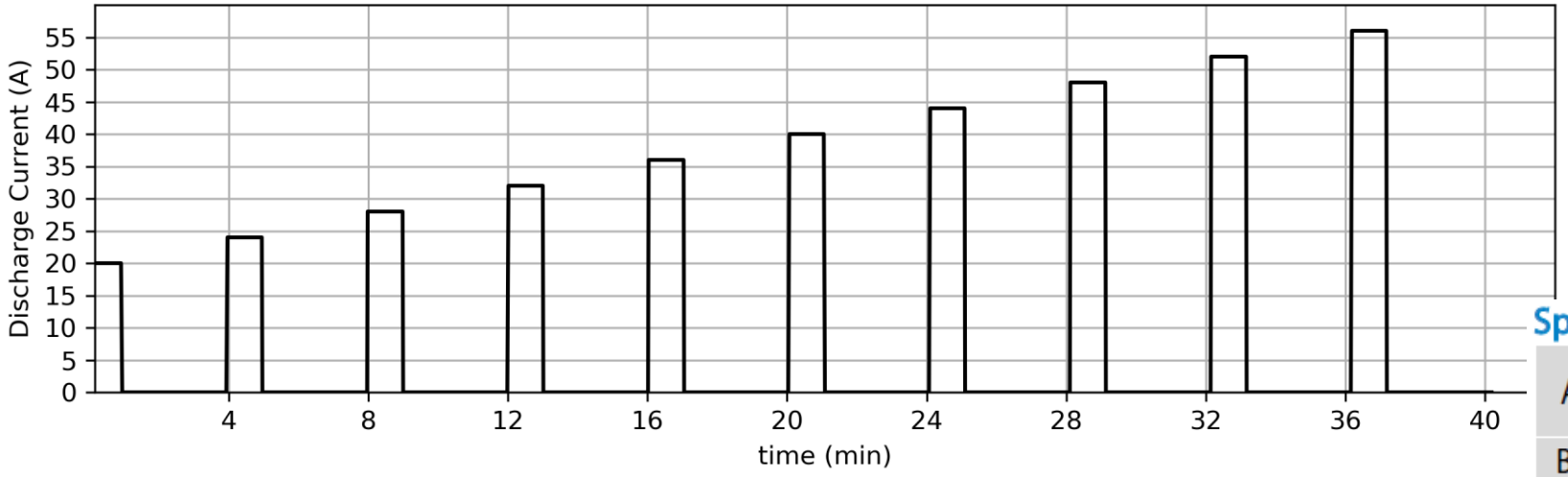

Specifications

Article number	V	Ah C5 (10,8V)	Ah C10 (10,8V)	Ah C20 (10,8V)
BAT412110081	12	82	90	100

10-Off-Grid Energy Storage Systems © 2025 by Henry Louie is licensed under CC BY-NC-SA 4.0 www.drhenrylouie.com

How can we model the I-V curve?

What about this model?

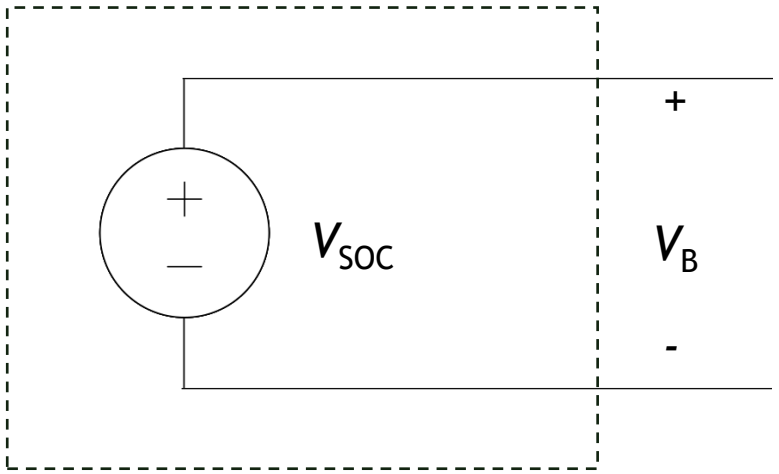

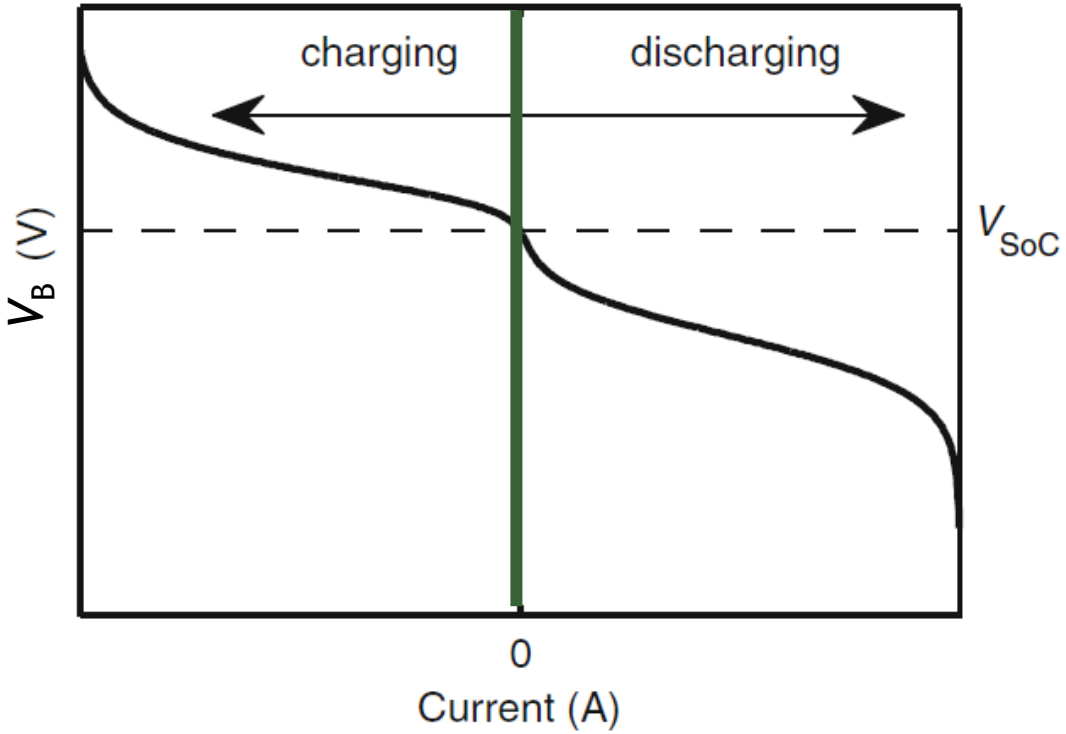

10-Off-Grid Energy Storage Systems © 2025 by Henry Louie is licensed under CC BY-NC-SA 4.0 www.drhenrylouie.com

How can we model the I-V curve?

What about this model?

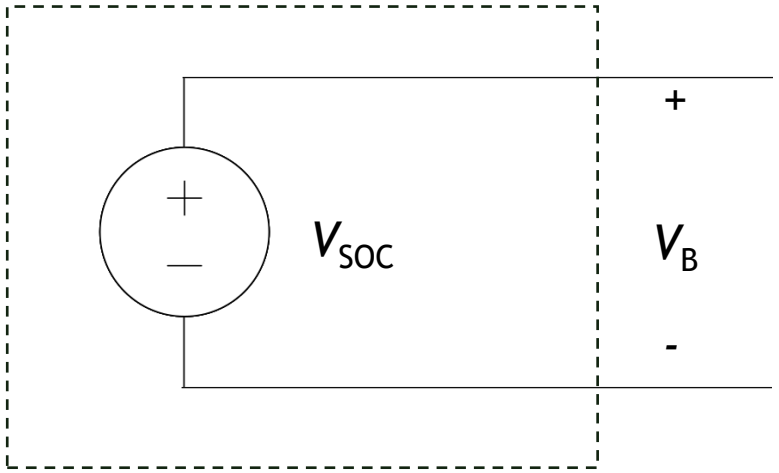

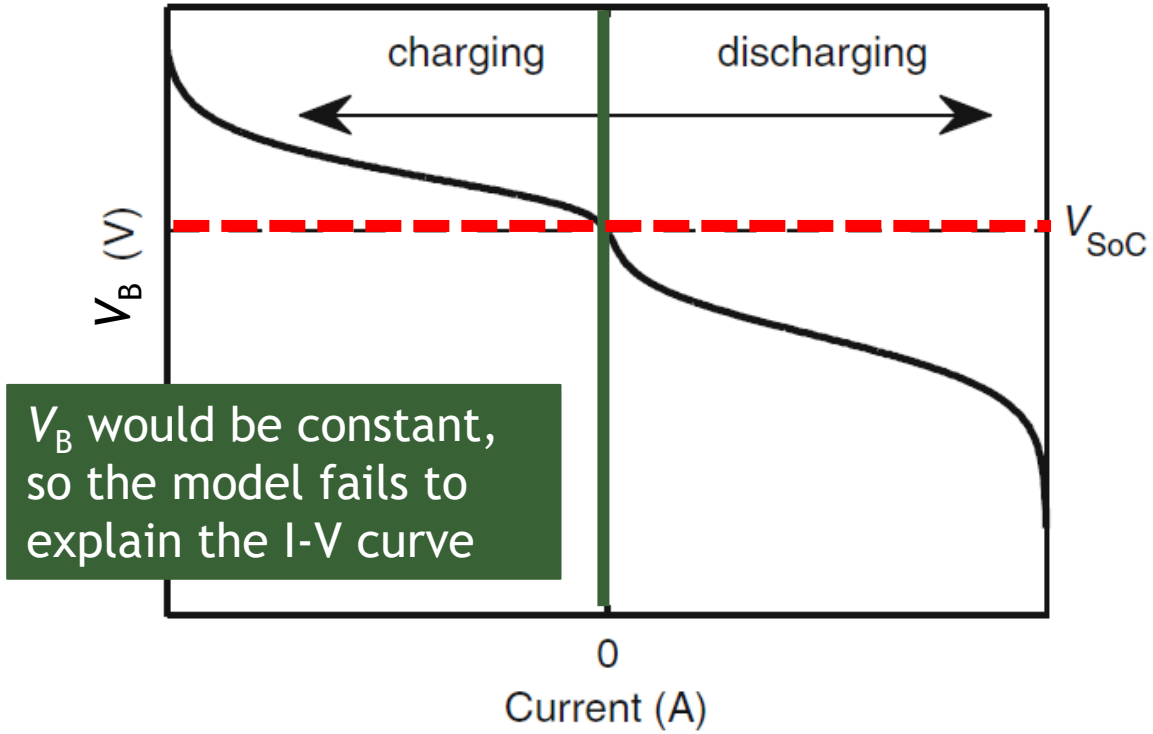

V_B would be constant, so the model fails to explain the I-V curve

10-Off-Grid Energy Storage Systems © 2025 by Henry Louie is licensed under CC BY-NC-SA 4.0 www.drhenrylouie.com

How can we model the I-V curve?

What about this model?
Sketch the I-V curve.

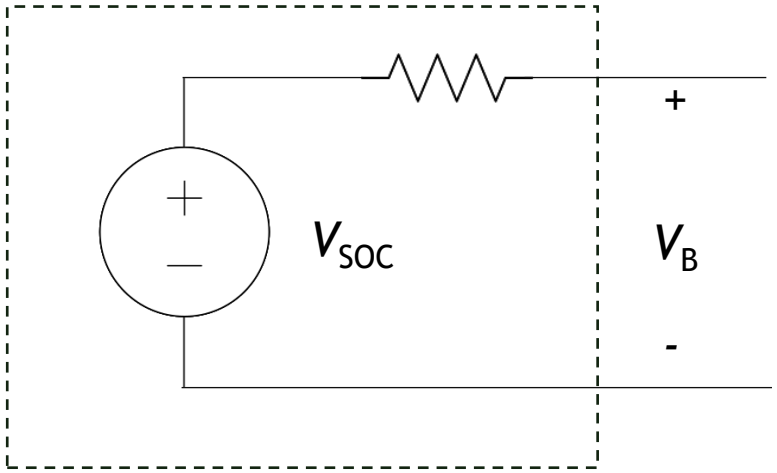

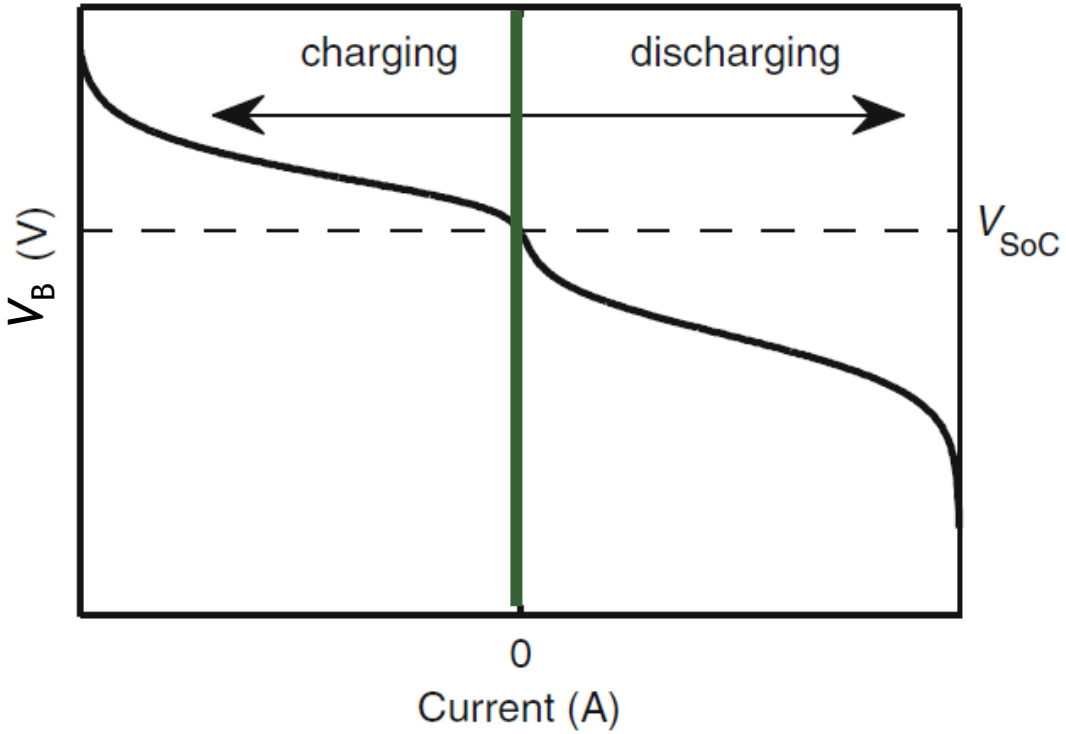

10-Off-Grid Energy Storage Systems © 2025 by Henry Louie is licensed under CC BY-NC-SA 4.0 www.drhenrylouie.com

How can we model the I-V curve?

What about this model?
Sketch the I-V curve.

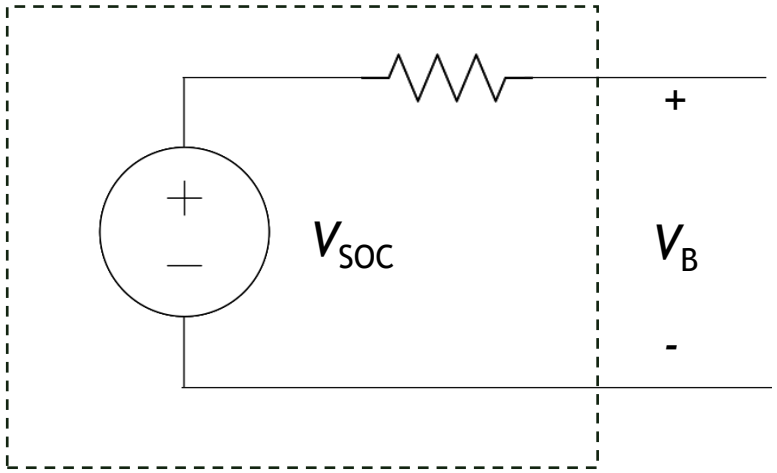

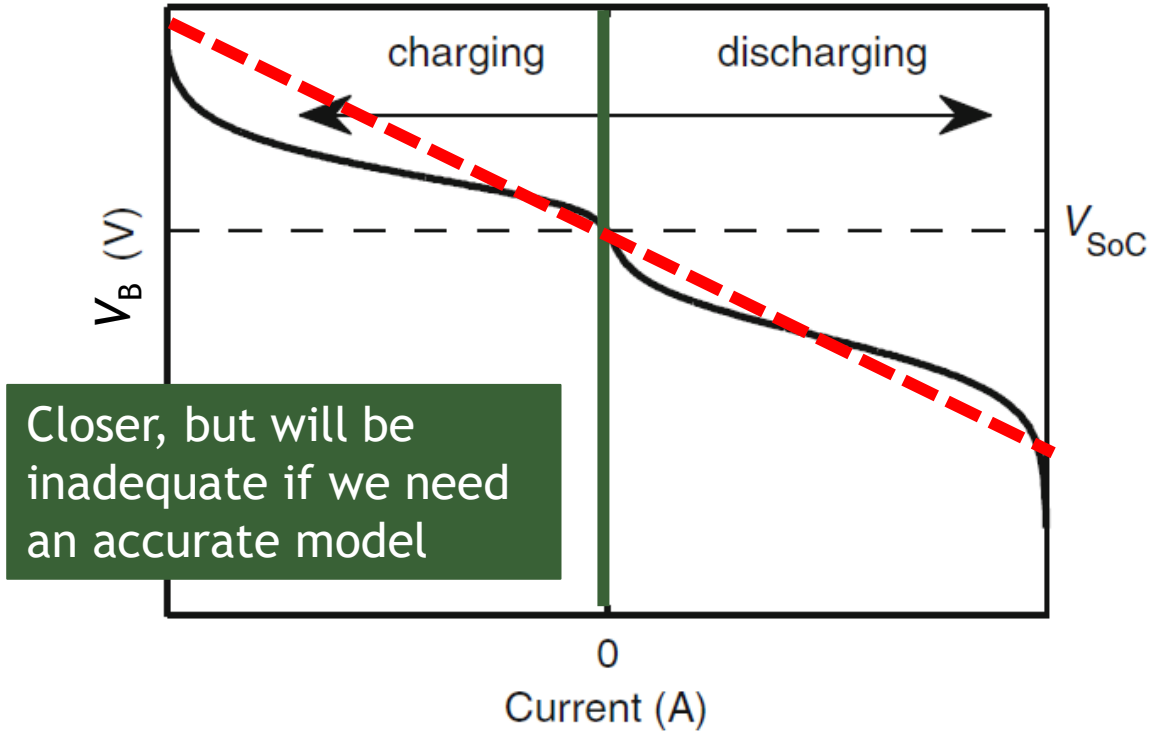

Closer, but will be inadequate if we need an accurate model

10-Off-Grid Energy Storage Systems © 2025 by Henry Louie is licensed under CC BY-NC-SA 4.0 www.drhenrylouie.com

Cell Circuit Model

- Several circuit models of battery cells have been proposed and used
- Selection depends on what characteristics are of interest (e.g. steady-state, dynamics, etc.)
- We will use a simplified model

Randles Model

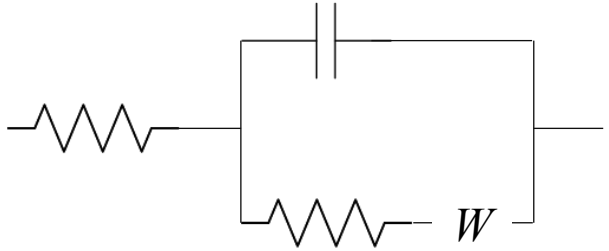

10-Off-Grid Energy Storage Systems © 2025 by Henry Louie is licensed under CC BY-NC-SA 4.0 www.drhenrylouie.com

Circuit Model of a Battery Cell

Ohmic polarization, dependent on: state-of-charge, temperature

Activation and concentration polarization dependent on: state-of-charge, temperature, current magnitude and polarity, time (since charged/discharged)

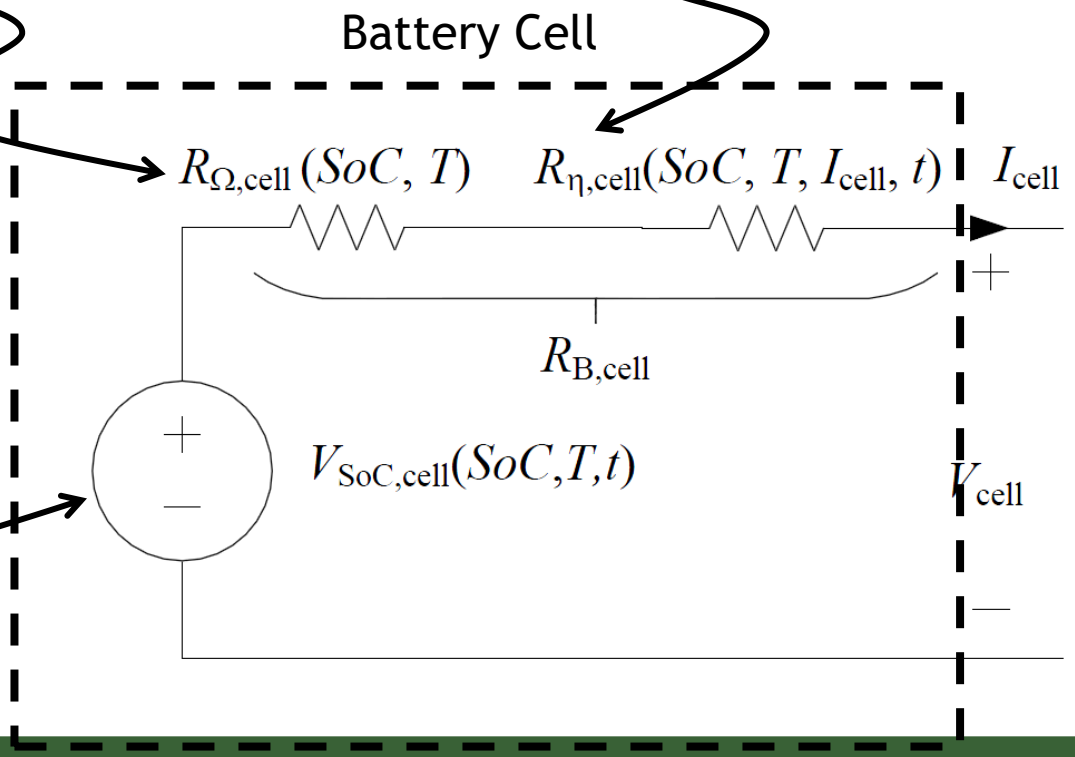

State-of-charge voltage, dependent on: state-of-charge, temperature, time (since discharged/charged)

10-Off-Grid Energy Storage Systems © 2025 by Henry Louie is licensed under CC BY-NC-SA 4.0 www.drhenrylouie.com

Cell Circuit Model

- Combine the resistances into a single quantity $R_{B,cell}$ which we will call the "battery resistance"
- Keep in mind:
  - $R_{B,cell}$ models the Ohmic, activation and concentration polarizations
  - $R_{B,cell}$ depends on many factors, and so there is no single $R_{B,cell}$ for a battery, rather we assume that $R_{B,cell}$ refers to the resistance at the <u>present state</u> of the battery
  - $R_{B,cell}$ is not the "internal resistance" sometimes reported on spec sheets, the reported value is usually the Ohmic resistance only

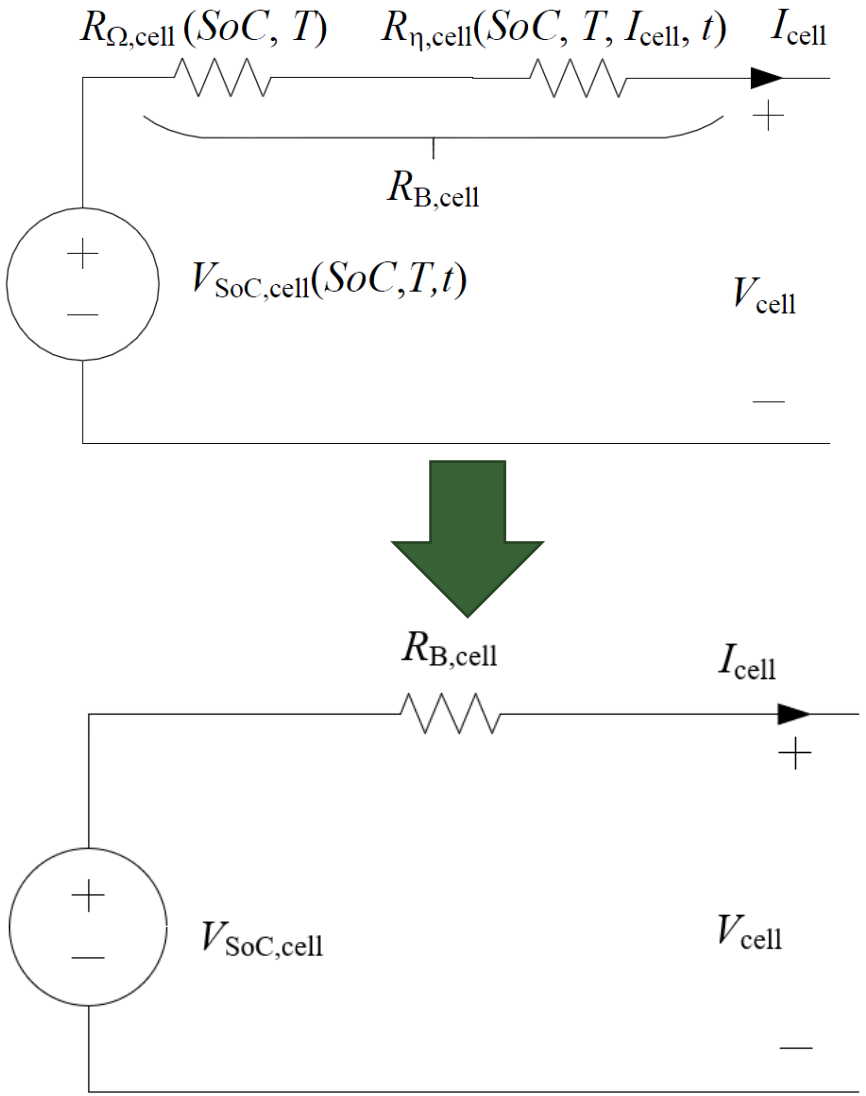

10-Off-Grid Energy Storage Systems © 2025 by Henry Louie is licensed under CC BY-NC-SA 4.0 www.drhenrylouie.com

Cell Circuit Model

- Analysis via KVL:

$$V_{\text{cell}} = V_{\text{SoC,cell}} - I_{\text{cell}} R_{\text{B,cell}}$$

- Voltage drop associated with $R_{\text{B,cell}}$ causes the terminal voltage to greater than $V_{\text{SoC,cell}}$ when charging, and lower than $V_{\text{SoC,cell}}$ when discharging

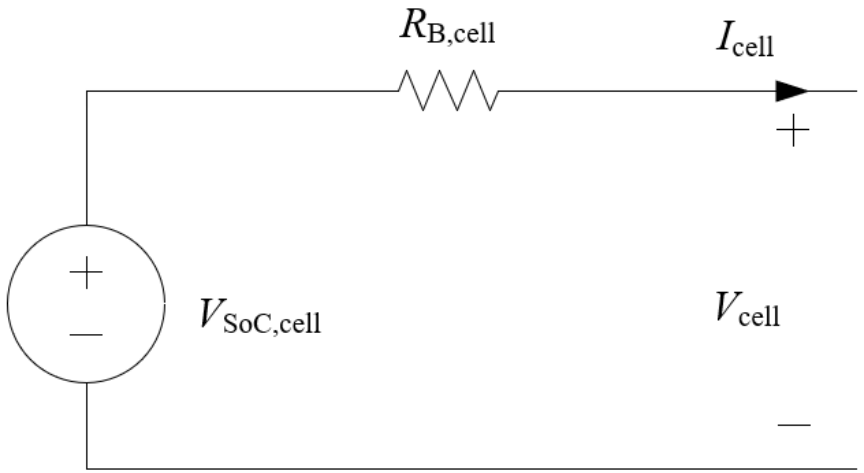

10-Off-Grid Energy Storage Systems © 2025 by Henry Louie is licensed under CC BY-NC-SA 4.0 www.drhenrylouie.com

Battery Circuit Model

Extension of model to a battery with two or more series connected cells is straightforward

$$R_B = N_{cells} \times R_{B,cell}$$

$$I_B = I_{cell}$$

$$V_{SoC} = N_{cells} \times V_{SoC,cell}$$

$$V_B = V_{SoC} - I_B R_B$$

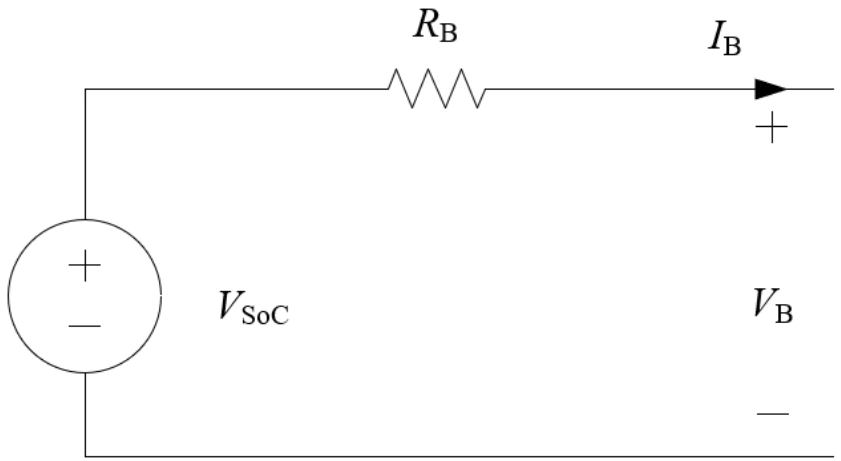

10-Off-Grid Energy Storage Systems © 2025 by Henry Louie is licensed under CC BY-NC-SA 4.0 www.drhenrylouie.com

Example 10.4

The equilibrium open-circuit cell voltage of a 24 V lead-acid battery is 24.96 V. An external circuit is connected to the battery that draws 21 A. Assume the battery resistance R_B under these conditions is 0.060 Ω. Compute the terminal voltage.

10-Off-Grid Energy Storage Systems © 2025 by Henry Louie is licensed under CC BY-NC-SA 4.0 www.drhenrylouie.com

Example 10.4

The equilibrium open-circuit cell voltage of a 24 V lead-acid battery is 24.96 V. An external circuit is connected to the battery that draws 21 A. Assume the battery resistance R_B under these conditions is 0.060 Ω. Compute the terminal voltage.

$$V_B = V_{SoC} - I_B R_B$$

$$V_B = 24.96 - 21.0 \times 0.060 = 23.70\,\text{V}$$

10-Off-Grid Energy Storage Systems © 2025 by Henry Louie is licensed under CC BY-NC-SA 4.0 www.drhenrylouie.com

Battery Circuit Model

R_B is generally higher for lead-acid battery (black) than lithium-ion (red)

Lithium-ion batteries experience less of a voltage drop when discharging

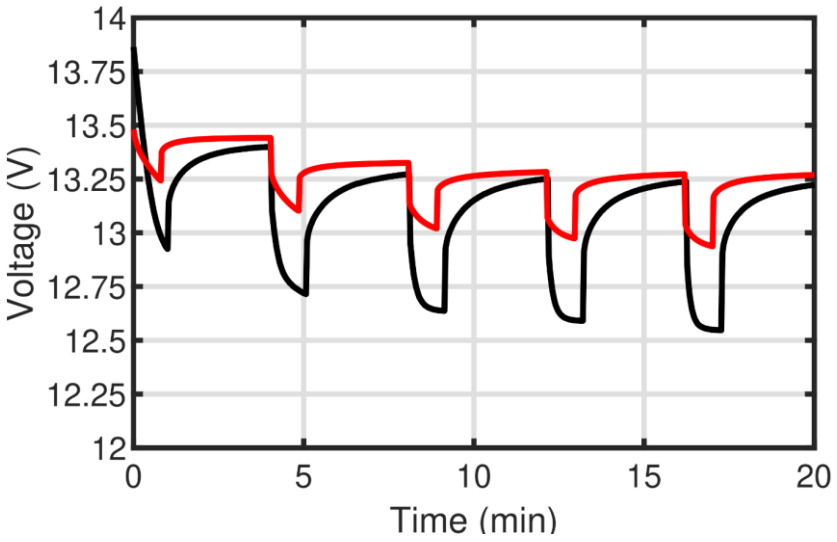

10-Off-Grid Energy Storage Systems © 2025 by Henry Louie is licensed under CC BY-NC-SA 4.0 www.drhenrylouie.com

Cell Voltage During Discharging/Charging

Curves are influenced by the dual effects of increasing V_{SoC} and changes in the polarizations as function of state-of-charge

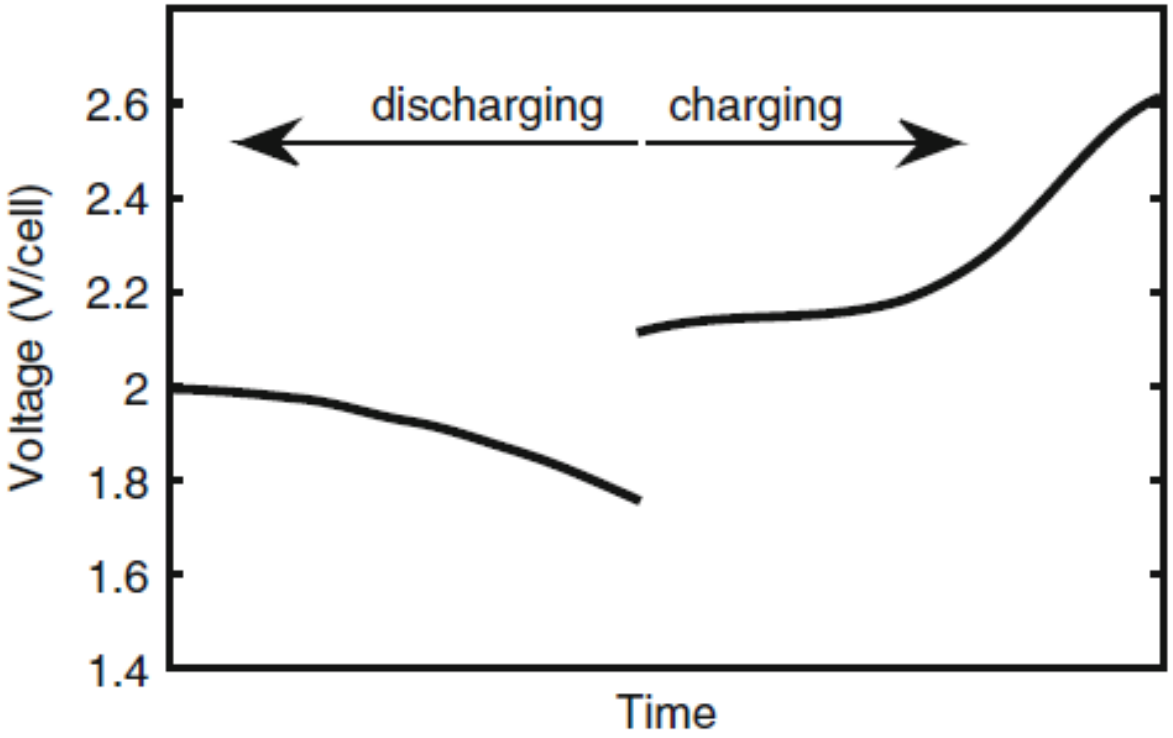

Current magnitude is kept constant throughout

10-Off-Grid Energy Storage Systems © 2025 by Henry Louie is licensed under CC BY-NC-SA 4.0 www.drhenrylouie.com

Battery Specification Sheets

- Provide technical information on battery characteristics and performance
- Not always easy to interpret
- Most important characteristics
  1. Nominal Voltage
  2. Capacity
  3. Cycle life

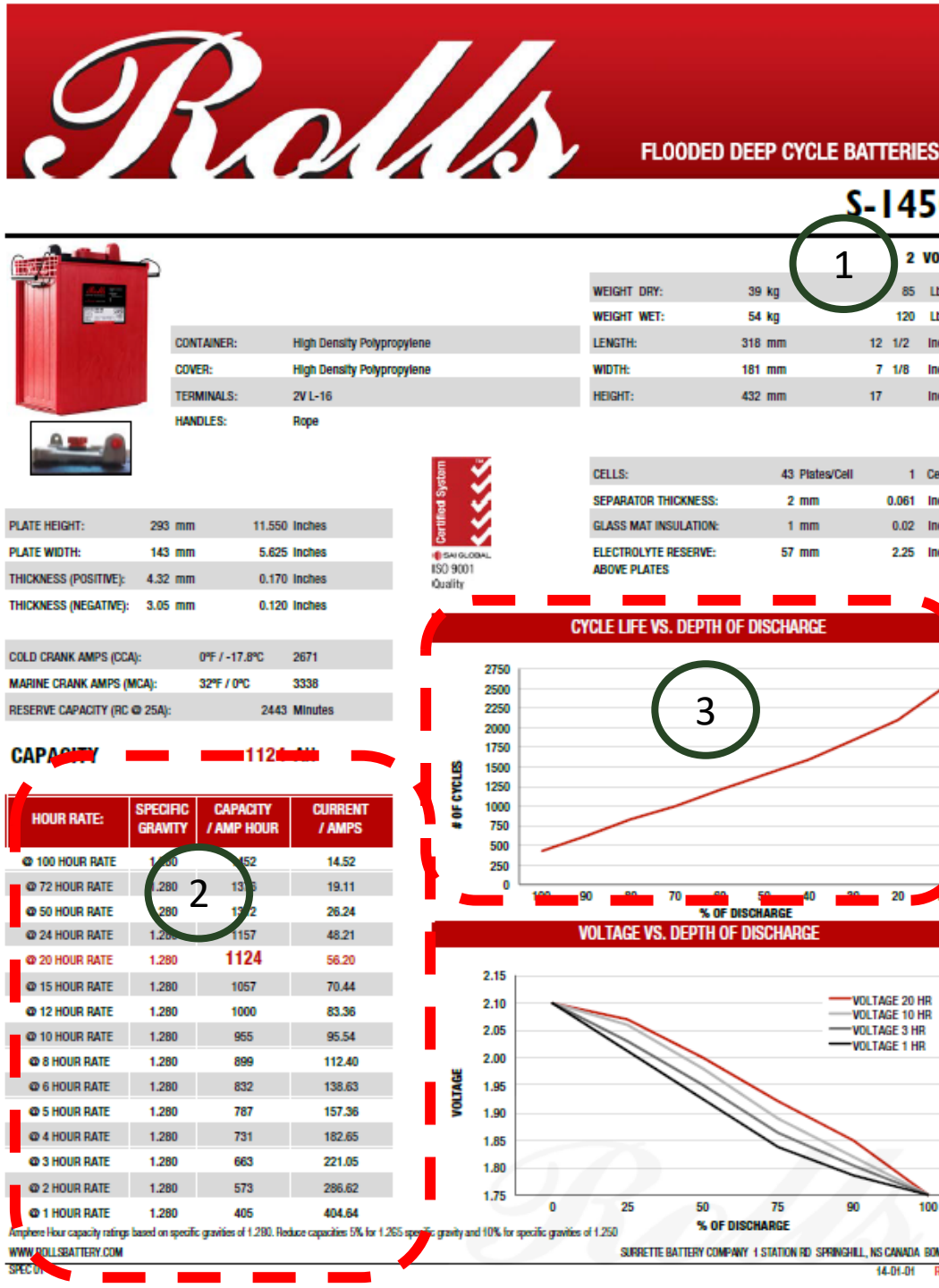

10-Off-Grid Energy Storage Systems © 2025 by Henry Louie is licensed ur

Battery Capacity

- Battery Capacity: indication of how long a battery can meaningfully supply a constant current load

- "Battery Capacity" can refer to either:
  - Charge capacity, measured in amphours (Ah) (more common)

    OR
  - Energy capacity, measured in kilowatthours (kWh) (less common)

10-Off-Grid Energy Storage Systems © 2025 by Henry Louie is licensed under CC BY-NC-SA 4.0 www.drhenrylouie.com

Charge Capacity

- Charge capacity (simple definition): quantity of electric charge (coulombs) that can be supplied to an external load
- Usually expressed in amphours rather than coulombs

1 Ampere = 1 coulomb/second

1 Ampere-second= 1 coulomb

1 Amperehour= 3600 coulomb

10-Off-Grid Energy Storage Systems © 2025 by Henry Louie is licensed under CC BY-NC-SA 4.0 www.drhenrylouie.com

Charge Capacity

- The maximum amount of charge that a battery can provide is limited by the mass of its active materials
- More massive (larger) batteries can supply more charge than smaller batteries
- Once active materials have been depleted (or no longer able to be involved in the discharge reaction for whatever reason), the battery can no longer supply charge. Examples:
  - all lead or lead dioxide is converted to lead sulfate
  - sulfation has prevented remaining lead or lead dioxide to react with the electrolyte

10-Off-Grid Energy Storage Systems © 2025 by Henry Louie is licensed under CC BY-NC-SA 4.0 www.drhenrylouie.com

Computing Charge (Discharge)

The charge provided by the battery is found from:

$$\text{charge} = \int_0^T i_B(t)\, dt$$

i_B(t): battery discharge current, (A)
charge: battery discharge, (C)
T: time discharge ends (usually in hours or minutes)

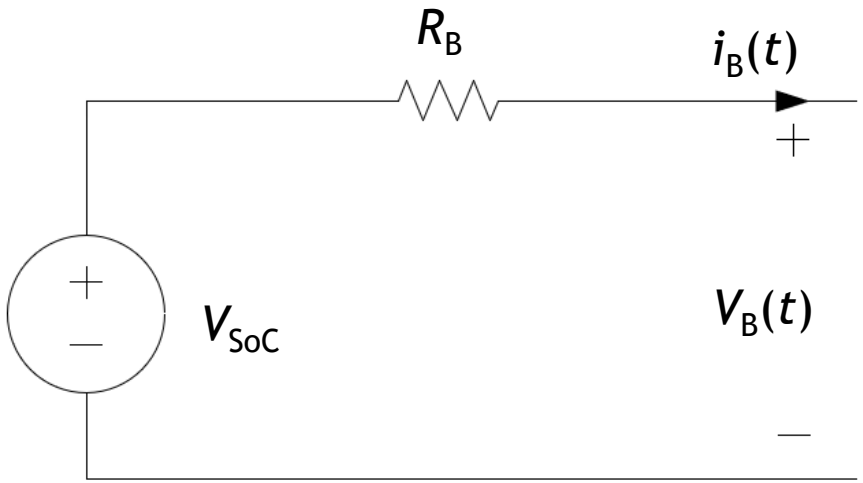

10-Off-Grid Energy Storage Systems © 2025 by Henry Louie is licensed under CC BY-NC-SA 4.0 www.drhenrylouie.com

Constant Current Discharge

- We are particularly interested in the case where the discharge current is constant
- If the current is constant:

$$\text{charge} = \int_0^T i_B(t)\, dt = \int_0^T I_B\, dt = TI_B$$

We generally use uppercase values to designate DC variables

10-Off-Grid Energy Storage Systems © 2025 by Henry Louie is licensed under CC BY-NC-SA 4.0 www.drhenrylouie.com

Constant Current Discharge

- We express the charge as the variable $charge_x$, where the "x" is the constant discharge current:

$$charge_x = xT_{d,x}$$

$T_{d,x}$ is the duration, in hours, the battery was discharged at a constant current x

- We will usually express charge in amphours (instead of, say, ampminutes)

10-Off-Grid Energy Storage Systems © 2025 by Henry Louie is licensed under CC BY-NC-SA 4.0 www.drhenrylouie.com

Constant Current Discharge

Consider batteries discharged under the following scenarios (where the discharge current and times are arbitrary):

Constant current of 10 A for 30 hours

$$charge_{10} = xT_{d,x} = 10 \times 30 = 300 \text{ Ah}$$

Constant current of 60 A for 20 hours

$$charge_{60} = xT_{d,x} = 60 \times 20 = 1200 \text{ Ah}$$

We will see that it is important to always reference the current that the battery was discharged at

10-Off-Grid Energy Storage Systems © 2025 by Henry Louie is licensed under CC BY-NC-SA 4.0 www.drhenrylouie.com

Exercise

Compute the charge provided by the battery, in Amp<u>hours</u>, if the discharge current is:

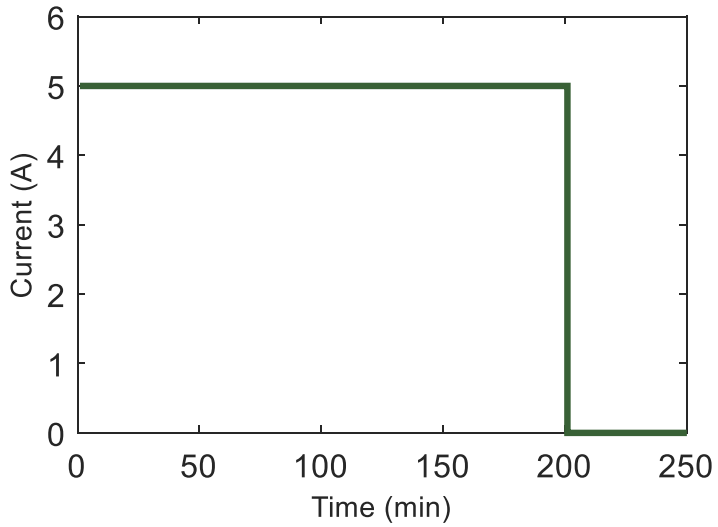

10-Off-Grid Energy Storage Systems © 2025 by Henry Louie is licensed under CC BY-NC-SA 4.0 www.drhenrylouie.com

Exercise

Compute the charge provided by the battery, in Amp<u>hours</u>, if the discharge current is:

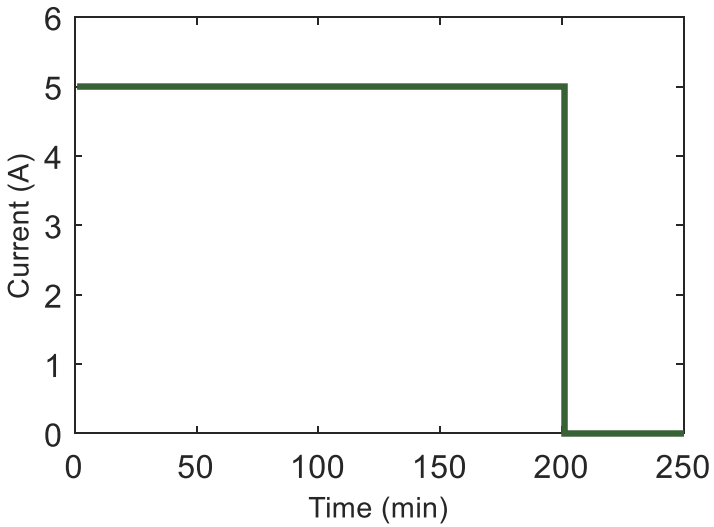

$$charge_5 = xT_{d,x} = 5 \times \frac{200}{60} = 16.67 \text{ Ah}$$

10-Off-Grid Energy Storage Systems © 2025 by Henry Louie is licensed under CC BY-NC-SA 4.0 www.drhenrylouie.com

Capacity: a more specific definition

- Battery Capacity: charge that a battery can supply <u>at a particular, constant, current</u> before its voltage drops before a manufacturer-defined cut-off voltage (e.g. 1.75 V/cell)
  - battery is capable of supplying additional charge, but at a lower voltage and possibly damaging the battery (until the active material is entirely depleted)
  - Lithium ion batteries cut-off voltage 2.0 to 3.0 V/cell
- Empirically determined by manufacturer

10-Off-Grid Energy Storage Systems © 2025 by Henry Louie is licensed under CC BY-NC-SA 4.0 www.drhenrylouie.com

Charge Capacity Notation

The *charge capacity* is expressed as:

$$c_x = xT_{\mathrm{d},x}$$

$T_{\mathrm{d,x}}$ is the duration, in hours, the battery was discharged at a constant current x until the cut-off voltage was reached

Example: the charge capacity of a battery that is discharged at 10A for 12 hours before the cut-off voltage is reached is

$$c_{10} = 10 \times 12 = 120 \text{ Ah}$$

10-Off-Grid Energy Storage Systems © 2025 by Henry Louie is licensed under CC BY-NC-SA 4.0 www.drhenrylouie.com

Measuring Battery Charge Capacity

- Connect battery to variable resistor and measure voltage and current
- Adjust the resistance so that the current is constant (I_B = 10 A)
- Keep adjusting the resistance as the battery terminal voltage decreases

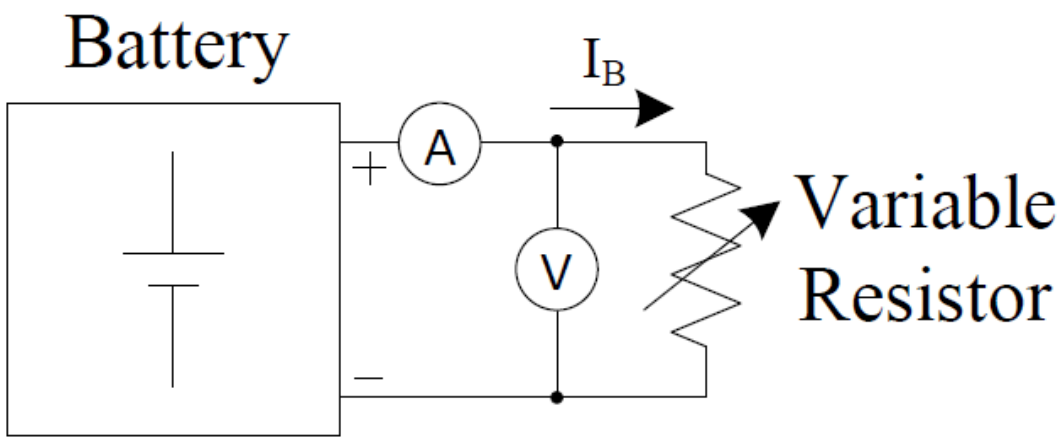

10-Off-Grid Energy Storage Systems © 2025 by Henry Louie is licensed under CC BY-NC-SA 4.0 www.drhenrylouie.com

Cut-Off Voltage

In this example, the battery reaches cut-off voltage of

6 cells x 1.8 V/cell = 10.8 V at 500 minutes (8.3 hours)

Capacity of the battery when discharged at 10 A is 10 A x 8.3h = 83 Ah

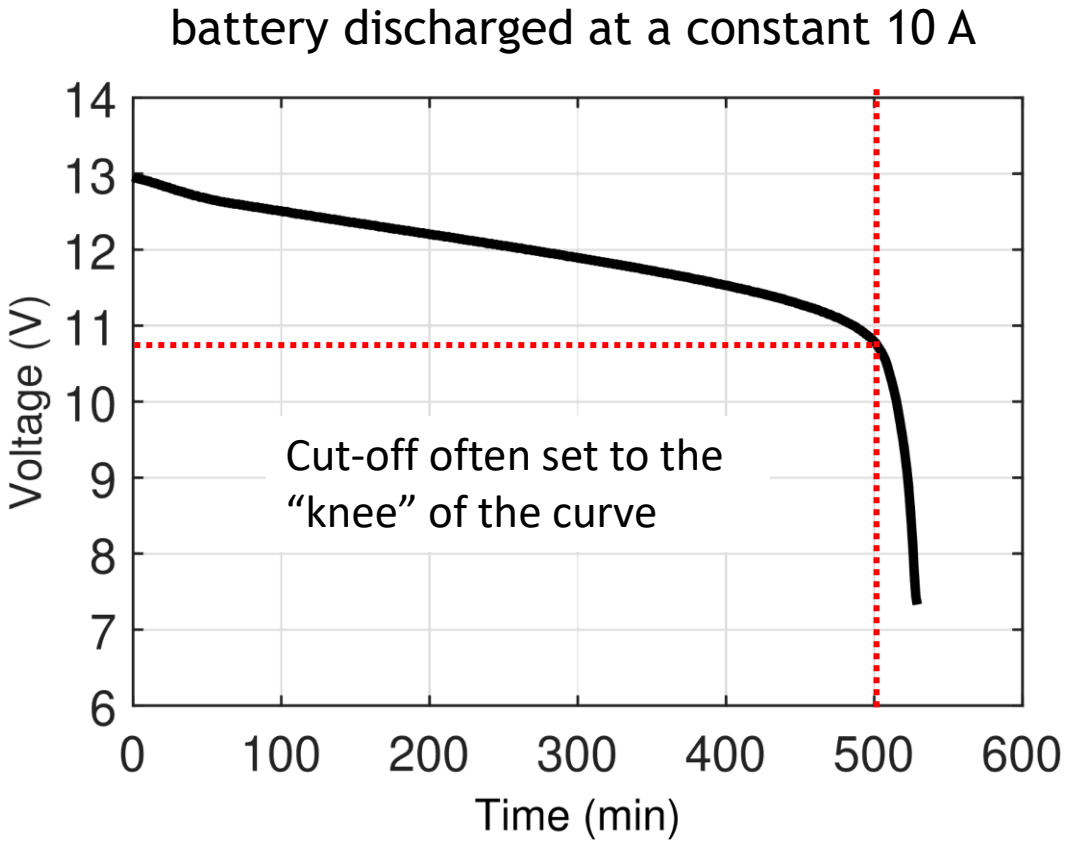

10-Off-Grid Energy Storage Systems © 2025 by Henry Louie is licensed under CC BY-NC-SA 4.0 www.drhenrylouie.com

Cut-Off Voltage

If the cut-off is ignored, the battery can provide additional charge, lasting 540 minutes

10 A x 9 hrs = 90 Ah

However, this deep discharge would shorten the battery's life

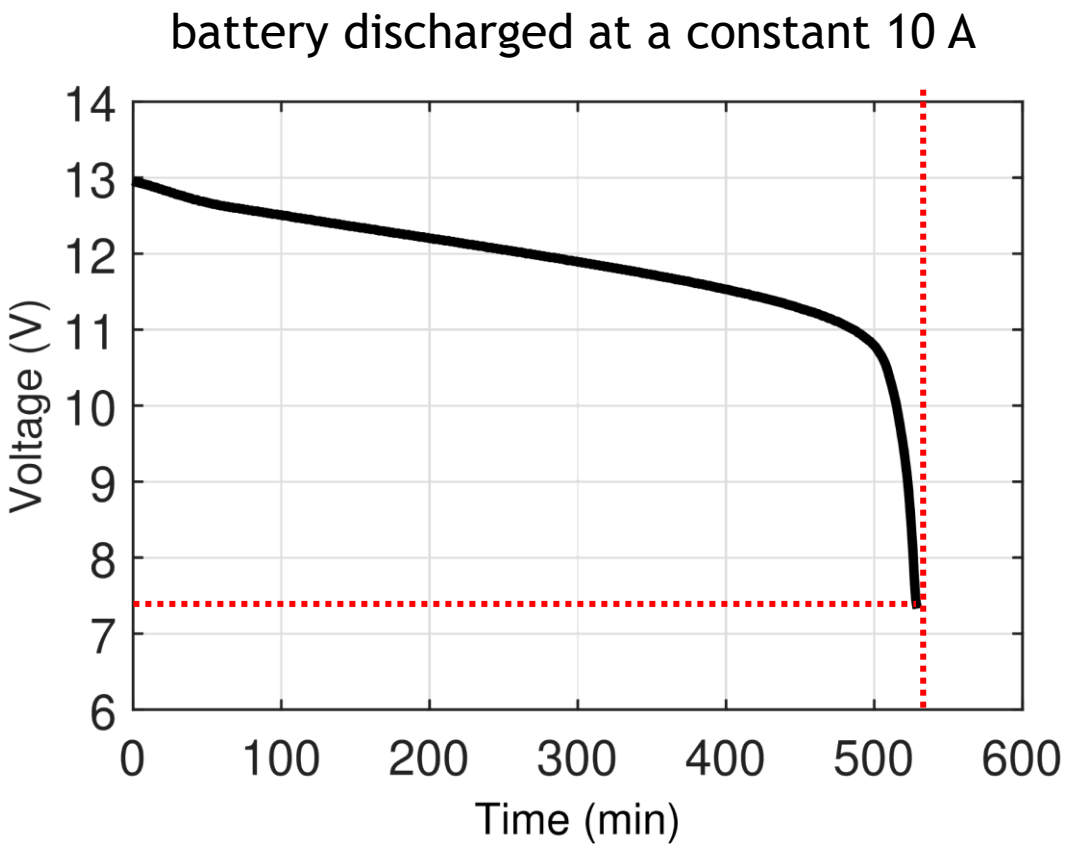

10-Off-Grid Energy Storage Systems © 2025 by Henry Louie is licensed under CC BY-NC-SA 4.0 www.drhenrylouie.com

Energy Capacity

- Electrical engineers are often more familiar with working in units of kilowatthours than amphours
  - AC load is often expressed in kilowatts and kilowatthours
- Energy capacity: *energy* that a battery can supply at a particular current before its voltage drops before a manufacturer-defined cut-off voltage

10-Off-Grid Energy Storage Systems © 2025 by Henry Louie is licensed under CC BY-NC-SA 4.0 www.drhenrylouie.com

Energy Capacity

- Energy capacity when discharged at a constant current x is computed from:

$$e_x = x\int_0^{T_{d,x}} v_B(t)\, dt$$

V_B(t): terminal voltage, (V)

- Current is constant, but voltage will vary over time

10-Off-Grid Energy Storage Systems © 2025 by Henry Louie is licensed under CC BY-NC-SA 4.0 www.drhenrylouie.com

Energy Capacity Versus Charge Capacity

- Energy capacity accounts for the voltage of the battery, while charge capacity does not
- Energy capacity is expressed in kilowatthours while charge capacity is expressed in amphours
- Energy capacity can be approximated (inaccurately) from the charge capacity as:

$$\hat{e}_x = c_x \times V_{\text{nom}}$$

$\hat{e}_x$: estimated energy capacity (Wh)
V_{nom}: nominal voltage (V)

10-Off-Grid Energy Storage Systems © 2025 by Henry Louie is licensed under CC BY-NC-SA 4.0 www.drhenrylouie.com

Approx. Energy Capacity

The approximate energy capacity of this battery at the 20-hour rate is:

Trojan BATTERY COMPANY — DATA SHEET — SOLAR TRUE DEEP-CYCLE AGM

MODEL	SAGM 06 375
VOLTAGE	6V
CAPACITY	375Ah @ 20Hr
MATERIAL	Polypropylene
BATTERY	VRLA AGM / Non-Spillable / Maintenance-Free
COLOR	Maroon
WATERING	No Watering Required
IEC 61427	8+ Years Life

6V

PRODUCT + PHYSICAL SPECIFICATIONS

Model	Terminal Type [D]	Dimensions [B] Inches (mm)			Weight Lbs. [F] (kg)	Handles	Installation Orientation
		Length	Width	Height [C]			
SAGM 06 375	M8/LT	11.66 (296)	6.94 (176)	16.31 (414)	114 (52)	Braided Rope	Horizontal and Vertical

ELECTRICAL SPECIFICATIONS

Voltage	Capacity [A] Amp-Hours (Ah)					Energy kWh	Internal Resistance (mΩ)	Short Circuit Current (A)
	10-Hr	20-Hr	48-Hr	72-Hr	100-Hr	20-Hr		
6V	329	375	389	394	400	2.25	1.7	3650

$$x = \frac{375\ \text{Ah}}{20\ \text{h}} = 18.75\ \text{A}$$ (this isn't required, but it is helpful for notation)

$$\hat{e}_x = c_x \times V_{\text{nom}}$$

$$\hat{e}_x = c_{18.75} \times 6 = 375 \times 6 = 2.25\ \text{kWh}$$

10-Off-Grid Energy Storage Systems © 2025 by Henry Louie is licensed under CC BY-NC-SA 4.0 www.drhenrylouie.com

State-of-Charge (SoC)

State-of-Charge (SoC): percentage of a battery's charge capacity remaining in the battery at a point in time. Put another way, it is the remaining charge that a battery can meaningfully discharge (i.e. without dropping below the cut-off voltage)

10-Off-Grid Energy Storage Systems © 2025 by Henry Louie is licensed under CC BY-NC-SA 4.0 www.drhenrylouie.com

State-of-Charge (SoC)

- SoC is computed as:

$$SoC = 100 \times \frac{c_x - \int_0^{T_{use}} i_B(t)\, dt}{c_x}$$

T_{use}: is the duration the battery has been in use (either charging or discharging)

- Example: A battery with capacity c_{35} = 350 Ah that has been discharged for 6 hours at 35 A has a SoC of

$$SoC = 100 \times \frac{c_x - \int_0^{T_{use}} i_B(t)\, dt}{c_x} = 100 \times \frac{350 - \int_0^{6} 35\, dt}{350} = 40\%$$

10-Off-Grid Energy Storage Systems © 2025 by Henry Louie is licensed under CC BY-NC-SA 4.0 www.drhenrylouie.com

Exercise

A lead-acid battery can have a negative SoC.

A. True

B. False

10-Off-Grid Energy Storage Systems © 2025 by Henry Louie is licensed under CC BY-NC-SA 4.0 www.drhenrylouie.com

Exercise

A lead-acid battery can have a negative SoC.

A. True

B. False

One way of this happening is the battery being discharged past the cut-off voltage

10-Off-Grid Energy Storage Systems © 2025 by Henry Louie is licensed under CC BY-NC-SA 4.0 www.drhenrylouie.com

Side Note on State-of-Charge

- Strictly defined, the SoC is not that useful
  - self-discharge is not accounted for
  - aging is not accounted for
  - if the discharging is not constant current, what value of c_x to use is not clear
- Still, it is a useful approximation but it is extremely difficult to accurately know the true state-of-charge of a battery

$$SoC = 100 \times \frac{c_x - \int_0^{T_{\text{use}}} i_{\text{B}}(t)\, dt}{c_x}$$

10-Off-Grid Energy Storage Systems © 2025 by Henry Louie is licensed under CC BY-NC-SA 4.0 www.drhenrylouie.com

Depth-of-Discharge (DoD)

- Depth-of-Discharge (DoD): percentage of the rated charge capacity that has been discharged:

$$DoD = 100 \times \frac{\int_0^{T_{\text{use}}} i_{\text{B}}(t)\, dt}{c_x}$$

- SoC and DoD are related by:

$$DoD = 100 - SoC$$

10-Off-Grid Energy Storage Systems © 2025 by Henry Louie is licensed under CC BY-NC-SA 4.0 www.drhenrylouie.com

Charge Capacity of 100 Ah Battery when discharged at 0.05C (5 A)

Assume 5 A have continuously been supplied to the load for six hours (30 Ah)

The battery is at:

30% depth-of-discharge (DoD),

70% state-of-charge (SoC)

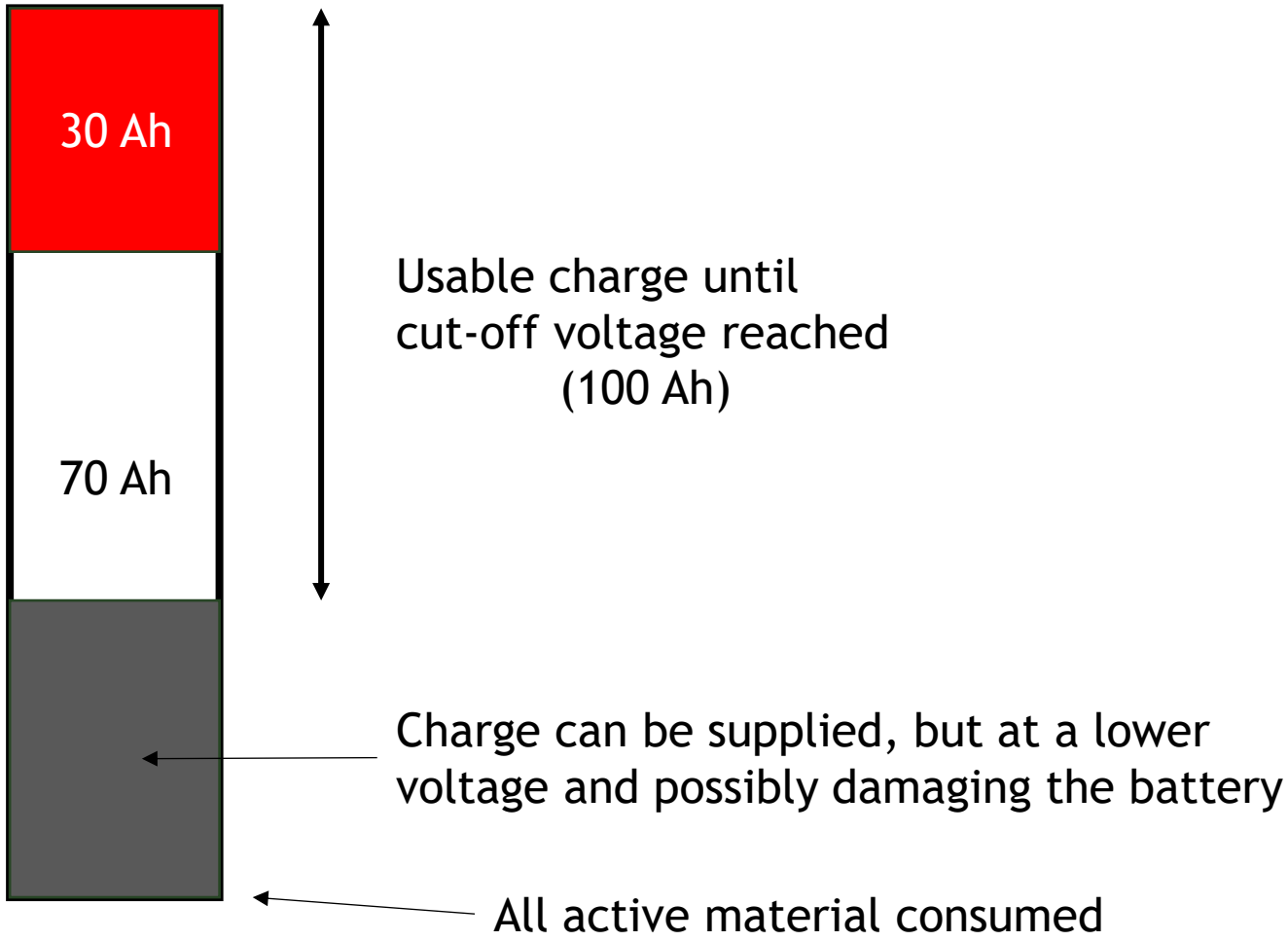

10-Off-Grid Energy Storage Systems © 2025 by Henry Louie is licensed under CC BY-NC-SA 4.0 www.drhenrylouie.com

Hour Rate

Hour rate: number of hours a battery can supply a particular constant current at until the cut-off voltage is reached

$$\text{Discharge Current} = \frac{\text{Capacity}}{\text{Hour Rate}}$$

Hour Rate (h)	Capacity (Ah)	Current (A)
10	200	20
6	180	30

10-Off-Grid Energy Storage Systems © 2025 by Henry Louie is licensed under CC BY-NC-SA 4.0 www.drhenrylouie.com

C-Rate

- C-rate: “charge” rate. Inverse of hour-rate
  - units: 1/hour
  - Discharge Current = C-Rate x Capacity
- Can be thought of as the percentage of the capacity that is discharged each hour at a particular current
- Most lead-acid battery capacities are in reference to a C-rate of 0.05C

10-Off-Grid Energy Storage Systems © 2025 by Henry Louie is licensed under CC BY-NC-SA 4.0 www.drhenrylouie.com

C-Rate Examples

- C-rate of 0.1C for a 100 Ah capacity refers to a current of 0.1 x 100 = 10A (this battery will last 10 hours when discharged at 10A)

- C-rate of 0.05C for a 400 Ah capacity refers to a current of 0.05 x 400 =20A (this battery will last 20 hours when discharged at 20A)

The “C” in 0.1C is not itself a unit, it just signifies that it is a C-rate

10-Off-Grid Energy Storage Systems © 2025 by Henry Louie is licensed under CC BY-NC-SA 4.0 www.drhenrylouie.com

Putting it all together

In other words:
A "100 Ah" battery when discharged at 0.05 x 100 = 5 A will last 20 hours before its terminal voltage drops below the cut-off voltage.

If discharged above 5 A, the battery will last less than 20 hours

10-Off-Grid Energy Storage Systems © 2025 by Henry Louie is licensed under CC BY-NC-SA 4.0 www.drhenrylouie.com

Exercise

1. Compute the current corresponding to a C-rate of 0.25 for a 60 Ah battery.

2. Compute the hour rate corresponding to a C-rate of 0.01.

10-Off-Grid Energy Storage Systems © 2025 by Henry Louie is licensed under CC BY-NC-SA 4.0 www.drhenrylouie.com

Exercise

1. Compute the current corresponding to a C-rate of 0.25 for a 60 Ah battery.

   Current = Capacity x C-rate = 60 x 0.25 = 15 A

2. Compute the hour rate corresponding to a C-rate of 0.01.

   Hour rate = 1/C-rate = 100 hr

10-Off-Grid Energy Storage Systems © 2025 by Henry Louie is licensed under CC BY-NC-SA 4.0 www.drhenrylouie.com

Capacity at Different Discharge Current

- A battery does not have a single capacity
  - capacity depends on discharge current
  - higher current results in less charge provided before cut-off voltage is reached (partially due to higher voltage drop across R_B)
  - battery capacity is always in reference to a particular discharge current
- Rather than specifying the current, spec sheets use the "C-rate" or "Hour Rate"

10-Off-Grid Energy Storage Systems © 2025 by Henry Louie is licensed under CC BY-NC-SA 4.0 www.drhenrylouie.com

Exercise

In which discharge scenario would more active material be consumed?

A. The battery is discharged at 10 A (constant) for a period of 1 hour
B. The battery is discharged at 1 A for a period of 10 hours
C. The same active material will be consumed in both scenarios

10-Off-Grid Energy Storage Systems © 2025 by Henry Louie is licensed under CC BY-NC-SA 4.0 www.drhenrylouie.com

Exercise

In which discharge scenario would more active material be consumed?

A. The battery is discharged at 10 A (constant) for a period of 1 hour

B. The battery is discharged at 1 A for a period of 10 hours

C. The same active material will be consumed in both scenarios

Although, if self-discharge is considered, then the answer would be B, but the difference would likely be negligible

10-Off-Grid Energy Storage Systems © 2025 by Henry Louie is licensed under CC BY-NC-SA 4.0 www.drhenrylouie.com

Capacity Table

	10-Hour Rate (0.10C)	20-Hour Rate (0.05C)	48-Hour Rate (0.021C)	72-Hour Rate (0.014)	100-Hour Rate (0.01C)
Battery A	136 Ah	153 Ah	157 Ah	164 Ah	170 Ah
Battery B	192 Ah	209 Ah	214 Ah	223 Ah	230 Ah
Battery C	211 Ah	229 Ah	237 Ah	247 Ah	255 Ah

decreasing current, increasing capacity

Discharged at
21.1 Ah/10 h = 21.1 A

Discharged at
255 Ah/100 h = 2.55 A

10-Off-Grid Energy Storage Systems © 2025 by Henry Louie is licensed under CC BY-NC-SA 4.0 www.drhenrylouie.com

Exercise

Compute the C-rate and corresponding discharge current for the Trojan SAGM 06 375

ELECTRICAL SPECIFICATIONS

Voltage	Capacity [A] Amp-Hours (Ah)				
	10-Hr	20-Hr	48-Hr	72-Hr	100-Hr
6V	329	375	389	394	400

10-Off-Grid Energy Storage Systems © 2025 by Henry Louie is licensed under CC BY-NC-SA 4.0 www.drhenrylouie.com

Exercise

Compute the C-rate and corresponding discharge current for the Trojan SAGM 06 375

ELECTRICAL SPECIFICATIONS

Voltage	Capacity [A] Amp-Hours (Ah)				
6V	10-Hr	20-Hr	48-Hr	72-Hr	100-Hr
	329	375	389	394	400
	0.1 C	0.05C	0.021C	0.014C	0.01C
	32.9 A	18.75 A	8.10 A	5.47 A	4 A

10-Off-Grid Energy Storage Systems © 2025 by Henry Louie is licensed under CC BY-NC-SA 4.0 www.drhenrylouie.com

Capacity Curves

- Show the charge capacity at different discharge rates
- Plot of the terminal voltage versus time
- Example:
  - When discharged at a rate of 0.10C (5.6 A) the battery lasts 10 hours, supplying 56 Ah until the cut-off voltage of 1.7 V/cell is reached

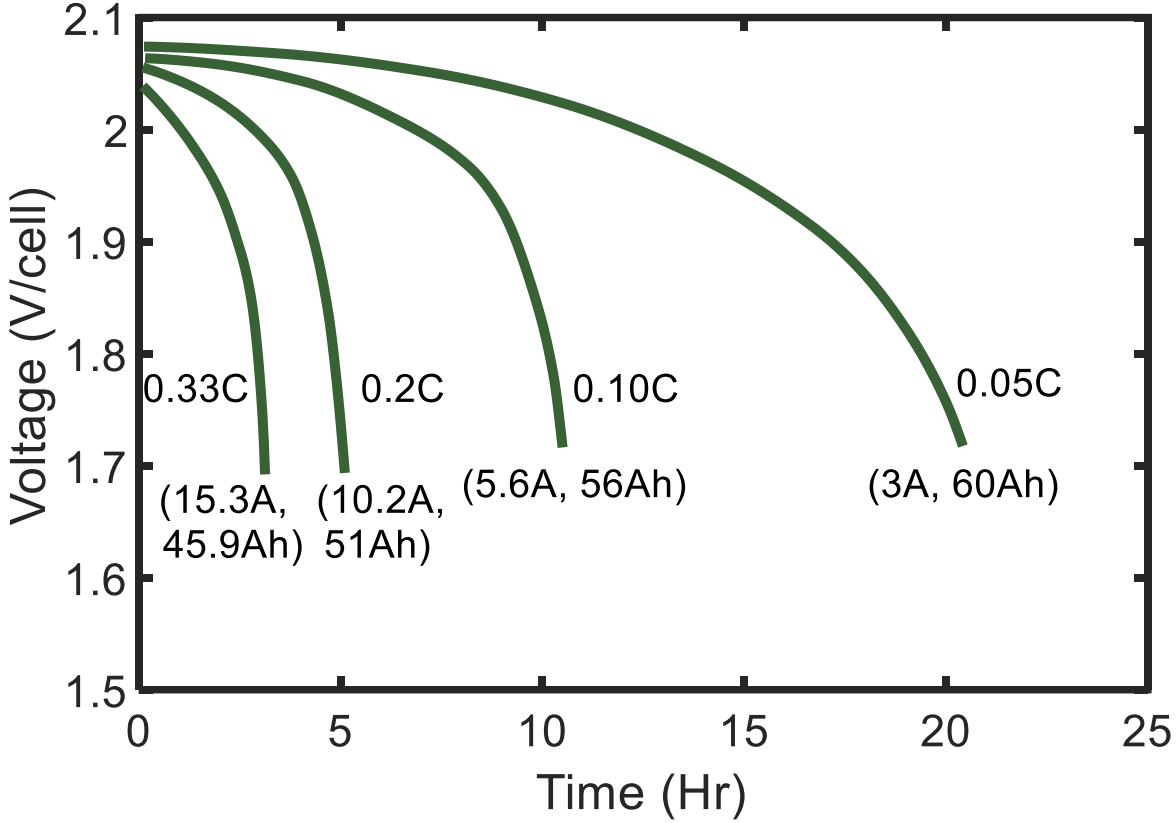

10-Off-Grid Energy Storage Systems © 2025 by Henry Louie is licensed under CC BY-NC-SA 4.0 www.drhenrylouie.com

What we mean by a battery's capacity

- Common practice for off-grid systems is to refer to the capacity of a battery based on its 20-hour rate (C-rate of 0.05)
  - using this convention, the capacity of the Trojan SAGM 06 375 battery is 375 Ah
- Note: in other applications a different hour rate is used
  - Example: 1 hour rate (C-rate of 1) is common for small dry cell and lithium ion batteries

10-Off-Grid Energy Storage Systems © 2025 by Henry Louie is licensed under CC BY-NC-SA 4.0 www.drhenrylouie.com

20-Hour Rate

- 20-hour rate is the assumed rate when only the capacity is reported
- Battery can supply 56.20 A for 20 hours before cut-off voltage is reached

CAPACITY **1124** AH

HOUR RATE:	SPECIFIC GRAVITY	CAPACITY / AMP HOUR	CURRENT / AMPS
@ 100 HOUR RATE	1.280	1452	14.52
@ 72 HOUR RATE	1.280	1376	19.11
@ 50 HOUR RATE	1.280	1312	26.24
@ 24 HOUR RATE	1.280	1157	48.21
@ 20 HOUR RATE	1.280	**1124**	56.20
@ 15 HOUR RATE	1.280	1057	70.44
@ 12 HOUR RATE	1.280	1000	83.36
@ 10 HOUR RATE	1.280	955	95.54
@ 8 HOUR RATE	1.280	899	112.40
@ 6 HOUR RATE	1.280	832	138.63
@ 5 HOUR RATE	1.280	787	157.36

10-Off-Grid Energy Storage Systems © 2025 by Henry Louie is licensed under CC BY-NC-SA 4.0 www.drhenrylouie.com

Peukert's Equation

- We are often interested in the capacity of the battery at rates not specified by the capacity table
  - How long will this battery last if discharged at 50 A?
- Use *Peurkert's Equation* to estimate

CAPACITY **1124 AH**

HOUR RATE:	SPECIFIC GRAVITY	CAPACITY / AMP HOUR	CURRENT / AMPS
@ 100 HOUR RATE	1.280	1452	14.52
@ 72 HOUR RATE	1.280	1376	19.11
@ 50 HOUR RATE	1.280	1312	26.24
@ 24 HOUR RATE	1.280	1157	48.21
@ 20 HOUR RATE	1.280	**1124**	56.20
@ 15 HOUR RATE	1.280	1057	70.44
@ 12 HOUR RATE	1.280	1000	83.36
@ 10 HOUR RATE	1.280	955	95.54
@ 8 HOUR RATE	1.280	899	112.40
@ 6 HOUR RATE	1.280	832	138.63
@ 5 HOUR RATE	1.280	787	157.36

10-Off-Grid Energy Storage Systems © 2025 by Henry Louie is licensed under CC BY-NC-SA 4.0 www.drhenrylouie.com

Peukert's Equation

- Peukert's equation is used to estimate the capacity c_x at a discharge current x, from a known (rated) capacity at discharge current x_r based on a "k" an estimated parameter known as Peukert's exponent

$$c_x = c_{x_r}\left(\frac{x_r}{x}\right)^{k-1}$$

- Peukert's equation is not a "law", it is based on empirical observations, not any underlying physical law---expect errors

10-Off-Grid Energy Storage Systems © 2025 by Henry Louie is licensed under CC BY-NC-SA 4.0 www.drhenrylouie.com

Peukert's Exponent

AGM lead-acid:
1.05 to 1.15

Lithium-Ion
close to 1

Flooded lead-acid:
1.2 to 1.5

0 — 1 — 1.5

Capacity increases as discharge current increases (not possible)

Capacity is not affected by discharge current (ideal)

Capacity decreases as discharge current increases

Peukert's Exponent can also be estimated from a capacity table

10-Off-Grid Energy Storage Systems © 2025 by Henry Louie is licensed under CC BY-NC-SA 4.0 www.drhenrylouie.com

Exercise

How long will this battery last if discharged at 50 A?

Assume k = 1.25

CAPACITY **1124 AH**

HOUR RATE:	SPECIFIC GRAVITY	CAPACITY / AMP HOUR	CURRENT / AMPS
@ 100 HOUR RATE	1.280	1452	14.52
@ 72 HOUR RATE	1.280	1376	19.11
@ 50 HOUR RATE	1.280	1312	26.24
@ 24 HOUR RATE	1.280	1157	48.21
@ 20 HOUR RATE	1.280	**1124**	56.20
@ 15 HOUR RATE	1.280	1057	70.44
@ 12 HOUR RATE	1.280	1000	83.36
@ 10 HOUR RATE	1.280	955	95.54
@ 8 HOUR RATE	1.280	899	112.40
@ 6 HOUR RATE	1.280	832	138.63
@ 5 HOUR RATE	1.280	787	157.36

10-Off-Grid Energy Storage Systems © 2025 by Henry Louie is licensed under CC BY-NC-SA 4.0 www.drhenrylouie.com

Exercise

How long will this battery last if discharged at 50 A? Assume k = 1.25

$$c_x = c_{x_r}\left(\frac{x_r}{x}\right)^{k-1}$$

Pick the rated current that is closest to the current of interest

$$c_{50} = 1157\left(\frac{48.21}{50}\right)^{1.25-1} = 1146.5 \text{ Ah}$$

$$T_{d,50} = \frac{c_{50}}{50} = 22.93 \text{ hours}$$

CAPACITY **1124 AH**

HOUR RATE:	SPECIFIC GRAVITY	CAPACITY / AMP HOUR	CURRENT / AMPS
@ 100 HOUR RATE	1.280	1452	14.52
@ 72 HOUR RATE	1.280	1376	19.11
@ 50 HOUR RATE	1.280	1312	26.24
@ 24 HOUR RATE	1.280	1157	48.21
@ 20 HOUR RATE	1.280	**1124**	56.20
@ 15 HOUR RATE	1.280	1057	70.44
@ 12 HOUR RATE	1.280	1000	83.36
@ 10 HOUR RATE	1.280	955	95.54
@ 8 HOUR RATE	1.280	899	112.40
@ 6 HOUR RATE	1.280	832	138.63
@ 5 HOUR RATE	1.280	787	157.36

10-Off-Grid Energy Storage Systems © 2025 by Henry Louie is licensed under CC BY-NC-SA 4.0 www.drhenrylouie.com

Other Forms of Peukert's Equation

$$c_x = c_{x_r}\left(\frac{x_r}{x}\right)^{k-1}$$

$C_1 = x^k T$ (only useful if the capacity at 1 A discharge is known)

$$T_{d,x} = T_{d,x_r}\left(\frac{c_{x_r}}{xT_{d,x_r}}\right)^k$$

10-Off-Grid Energy Storage Systems © 2025 by Henry Louie is licensed under CC BY-NC-SA 4.0 www.drhenrylouie.com

Exercise

A battery in an off-grid system is rated at 105 Ah when discharged at 5.25 A. What is the capacity when discharged at 11.7 A? What is the corresponding C-rate? Let k = 1.18.

10-Off-Grid Energy Storage Systems © 2025 by Henry Louie is licensed under CC BY-NC-SA 4.0 www.drhenrylouie.com

Exercise

A battery in an off-grid system is rated at 105 Ah when discharged at 5.25 A. What is the capacity when discharged at 11.7 A? What is the corresponding C-rate? Let k = 1.18.

$x = 11.7$ A (the discharge current of interest)

$x_r = 5.25$ A (the discharge current of the capacity we know)

$$c_{11.7} = c_{x_r}\left(\frac{x_r}{x}\right)^{k-1} = 105\left(\frac{5.25}{11.7}\right)^{1.18-1} = 90.90 \text{ Ah}$$

10-Off-Grid Energy Storage Systems © 2025 by Henry Louie is licensed under CC BY-NC-SA 4.0 www.drhenrylouie.com

Efficiency

- Batteries are not 100% efficient
- Typical range of lead acid battery efficiency is approx. 70 to 90%, but this depends on many factors
- Battery efficiencies
  - voltage efficiency: ratio of charging voltage to discharging voltage
  - coulombic (“Faraday”) efficiency: ratio of input charge to output charge
  - energy efficiency: ratio of energy out to energy in

10-Off-Grid Energy Storage Systems © 2025 by Henry Louie is licensed under CC BY-NC-SA 4.0 www.drhenrylouie.com

Voltage Efficiency

- Voltage rises when battery charges and drops when battery discharges due to R_B and V_{SOC}
- Computed as

$$\eta_V = \frac{\bar{V}_{B,D}}{\bar{V}_{B,C}}$$

average voltage during discharge divided by average voltage during charge

$$\bar{V}_{B,D} = \frac{1}{T_D}\int_t^{t+T_D} v_B(t)\mathrm{d}t$$

average voltage during discharge

$$\bar{V}_{B,C} = \frac{1}{T_C}\int_t^{t+T_C} v_B(t)\mathrm{d}t$$

average voltage during charge

- Typical voltage efficiency are 80 to 90%

10-Off-Grid Energy Storage Systems © 2025 by Henry Louie is licensed under CC BY-NC-SA 4.0 www.drhenrylouie.com

Coulombic (Faraday) Efficiency

- Charge entering a battery is somewhat less than the charge that can be extracted (due to side reactions internal to the battery)

$$\eta_F = \frac{\int_0^{T_D} i_{B,D}(t)\,\mathrm{d}t}{\int_{T_D}^{T_C+T_D} i_{B,C}(t)\mathrm{d}t}$$

ratio of charge input to charge output

- Coulombic efficiency of lead-acid batteries 90-95%, lithium-ion approaches 100%

10-Off-Grid Energy Storage Systems © 2025 by Henry Louie is licensed under CC BY-NC-SA 4.0 www.drhenrylouie.com

Energy Efficiency

- Ratio of energy input over energy output
- Energies computed by integrating power (current x voltage) during charge and discharge

$$\eta_B = \frac{\int_0^{T_D} i_D(t) V_{B,D}(t)\, dt}{\int_{T_D}^{T_C+T_D} i_{B,C}(t) V_{B,C}(t)\, dt}$$

- Often approximated as

$$\eta_B \approx \frac{\bar{V}_{B,D} \int_0^{T_D} i_{B,D}(t)\, dt}{\bar{V}_{B,C} \int_{T_D}^{T_C+T_D} i_{B,C}(t)(t)\, dt} = \eta_V \times \eta_C$$

10-Off-Grid Energy Storage Systems © 2025 by Henry Louie is licensed under CC BY-NC-SA 4.0 www.drhenrylouie.com

Cycle Life

Typical cycle is one 24-hour period of charging/discharging

- Batteries degrade over time and with use
- End of life when maximum charge capacity drops to 80% of rated (new) capacity
- Depth-of-Discharge affects number of times battery can be “cycled” before end-of-life capacity is reached
  - Deeper discharge, fewer cycles

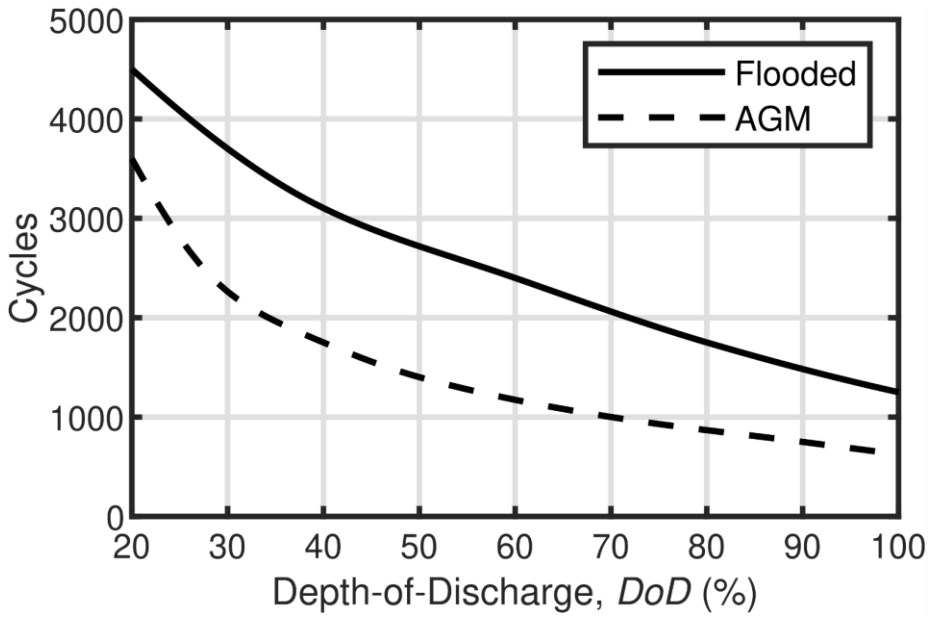

10-Off-Grid Energy Storage Systems © 2025 by Henry Louie is licensed under CC BY-NC-SA 4.0 www.drhenrylouie.com

Cycle Life

- $LiFePO_4$ batteries have much longer cycle life than lead acid
  - can last +10 years
- Longer cycle life can make up for the higher upfront cost of $LiFePO_4$ battery

Cycle life curves for three different LiFePO4 batteries

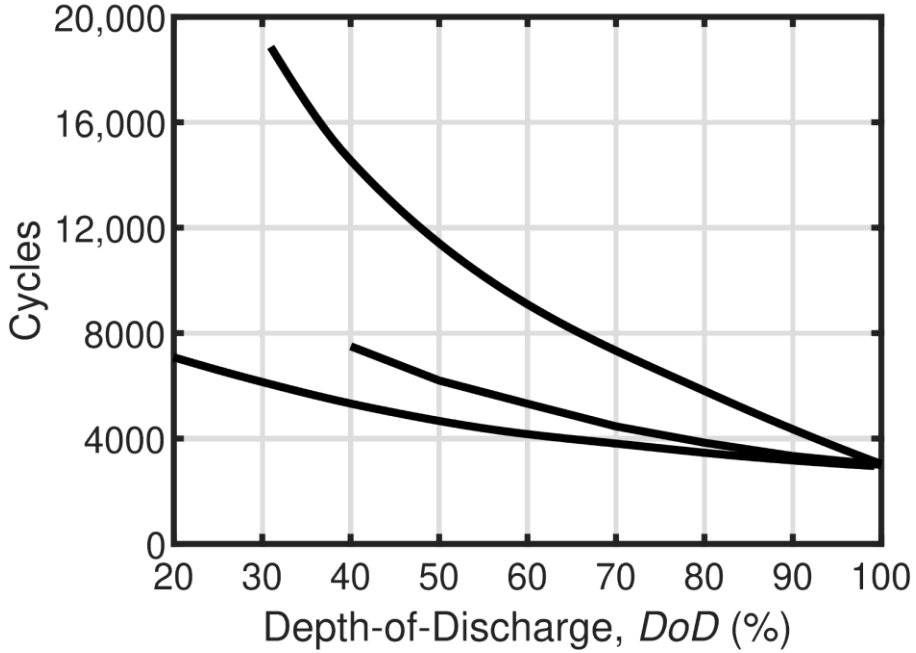

10-Off-Grid Energy Storage Systems © 2025 by Henry Louie is licensed under CC BY-NC-SA 4.0 www.drhenrylouie.com

Exercise

If 225 Ah are discharged over a 20-hour period from the Trojan SAGM 06 375 battery each day, estimate the number of years the battery will last before it reaches the end of its life.

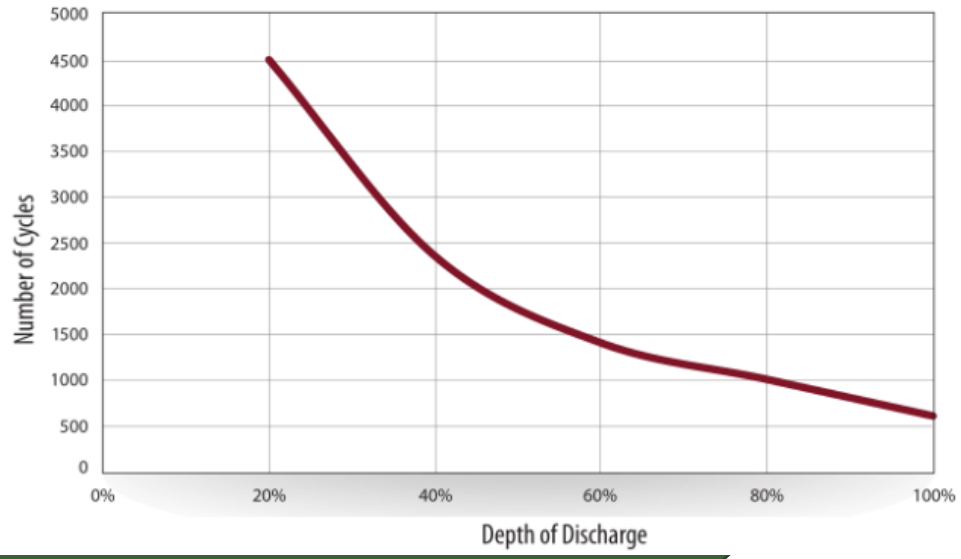

10-Off-Grid Energy Storage Systems © 2025 by Henry Louie is licensed under CC BY-NC-SA 4.0 www.drhenrylouie.com

Exercise

If 225 Ah are discharged over a 20-hour period from the Trojan SAGM 06 375 battery each day, estimate the number of years the battery will last before it reaches the end of its life.

Assume load is constant. 225/375 = 60% DoD. This corresponds to approx. 1400 cycles, or 1400/365 = 3.84 years.

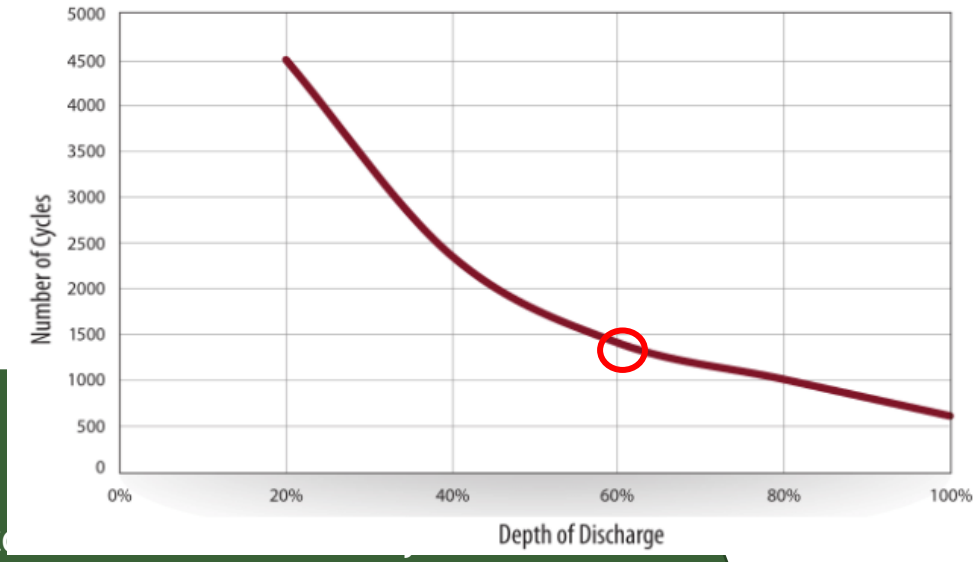

10-Off-Grid Energy Storage Systems © 2025 by Henry Louie is licensed under C

State-of-Health (SoH)

- Maximum charge capacity fades over time
- State-of-health: ratio of present maximum capacity to the maximum capacity when the battery was new

$$SoH = \frac{c_x(t)}{c_{x,\text{new}}}$$

- SoH is 100% when new; when drops to 60-80%, it is at the end of its life

10-Off-Grid Energy Storage Systems © 2025 by Henry Louie is licensed under CC BY-NC-SA 4.0 www.drhenrylouie.com

Self-Discharge

- Internal reactions continuously reduce the amount of active material available (self-discharge)
- Lead-acid: 2.5-5% per month
- Lithium-ion: 1-2% per month
- Higher temperatures increase self-discharge
  - approximately double for every 10 °C increase in temperature

10-Off-Grid Energy Storage Systems © 2025 by Henry Louie is licensed under CC BY-NC-SA 4.0 www.drhenrylouie.com

Temperature Dependence

- Batteries in off-grid systems are often not in temperature-controlled environments
- Chemical reactions increase with temperature, improving capacity, but also undesirable side-reactions that shorten battery life

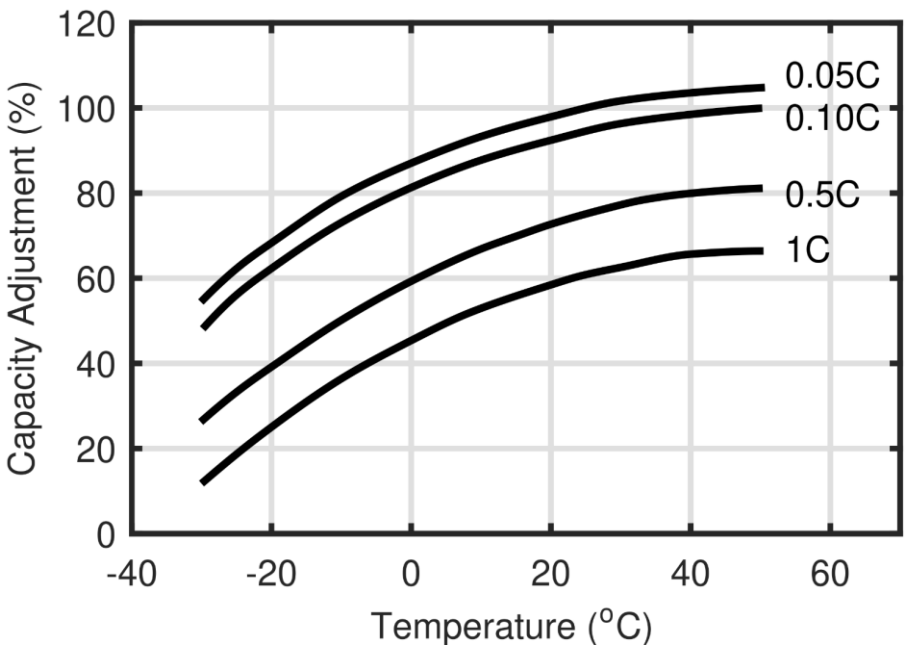

10-Off-Grid Energy Storage Systems © 2025 by Henry Louie is licensed under CC BY-NC-SA 4.0 www.drhenrylouie.com

Temperature Dependence

Increased temperature leads to:

- decreased internal impedance
- increased capacity
- increased open-circuit voltage

helpful

- increased self-discharge
- decreased cycle life

harmful

harmful effects tend to outweigh helpful effects

10-Off-Grid Energy Storage Systems © 2025 by Henry Louie is licensed under CC BY-NC-SA 4.0 www.drhenrylouie.com

Lithium-Ion Batteries

- Focus of previous slides was on lead-acid batteries
- $LiFePO_4$ are now commonly used in off-grid systems
- $LiFePO_4$ preferred over other lithium-ion chemistries due to:
  - high cycle life
  - improved safety

(*courtesy of KiloWatts for Humanity*)

10-Off-Grid Energy Storage Systems © 2025 by Henry Louie is licensed under CC BY-NC-SA 4.0 www.drhenrylouie.com

Principles of Operation

- Electrodes
  - anode: graphite carbon
  - cathode: lithium iron phosphate
  - electrodes may also incorporate other materials (such as copper) to improve their conductivity
- Thin porous membrane ("separator") separates electrodes
  - allows ions to pass through, but not electrons
- Electrolyte: lithium salt dissolved in organic solvent
  - facilitates the flow of ions, but does not undergo a chemical change like a lead-acid battery

10-Off-Grid Energy Storage Systems © 2025 by Henry Louie is licensed under CC BY-NC-SA 4.0 www.drhenrylouie.com

Principles of Operation

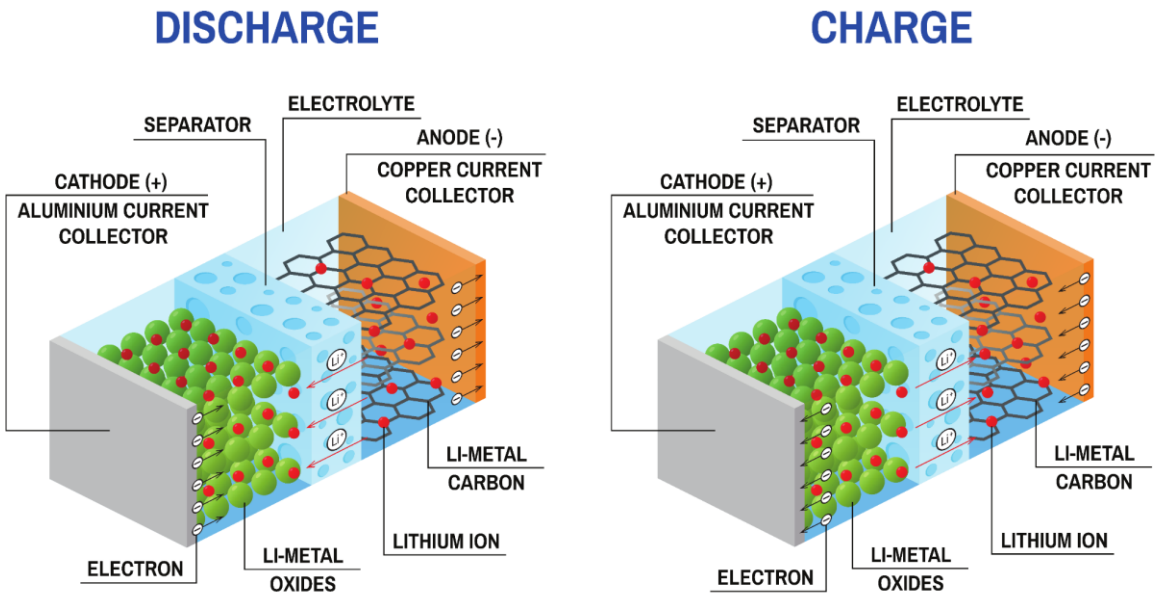

10-Off-Grid Energy Storage Systems © 2025 by Henry Louie is licensed under CC BY-NC-SA 4.0 www.drhenrylouie.com

Principles of Operation

- Discharging: some positive lithium ions migrate from anode to cathode, where they are inserted "intercalated" into the graphite
- Anode reaction:

$$Li_yC_6(s) \rightarrow Li_{y-z}C_6(s) + zLi^+(solv) + ze^-$$

some portion "z" of the "y" lithium in anode migrates through the electrolyte solvent as positive ions

- Cathode reaction:

$$Li_{y-z}FePO_4(s) + zLi^+(solv) + ze^- \rightarrow Li_yFePO_4(s)$$

Lithium ions intercalate into the cathode, increasing its portion of lithium

electrons leave anode through external circuit and travel to cathode

10-Off-Grid Energy Storage Systems © 2025 by Henry Louie is licensed under CC BY-NC-SA 4.0 www.drhenrylouie.com

Principles of Operation

- Complete discharge reaction

$$Li_{y-z}FePO_4(s) + Li_yC_6(s) \rightarrow Li_yFePO_4(s) + Li_{y-z}C_6(s)$$

- Reaction is reversed when charging
- Process is highly efficient with minimal electrode degradation

10-Off-Grid Energy Storage Systems © 2025 by Henry Louie is licensed under CC BY-NC-SA 4.0 www.drhenrylouie.com

Open-Circuit Volage

- More lithium in cathode means lower SoC
- Open-circuit voltage less sensitive to SoC than in lead-acid batteries
- 100% SoC and 0% are defined by manufacturer and do NOT correspond to 100% and 0% portion of lithium in anode (or cathode)

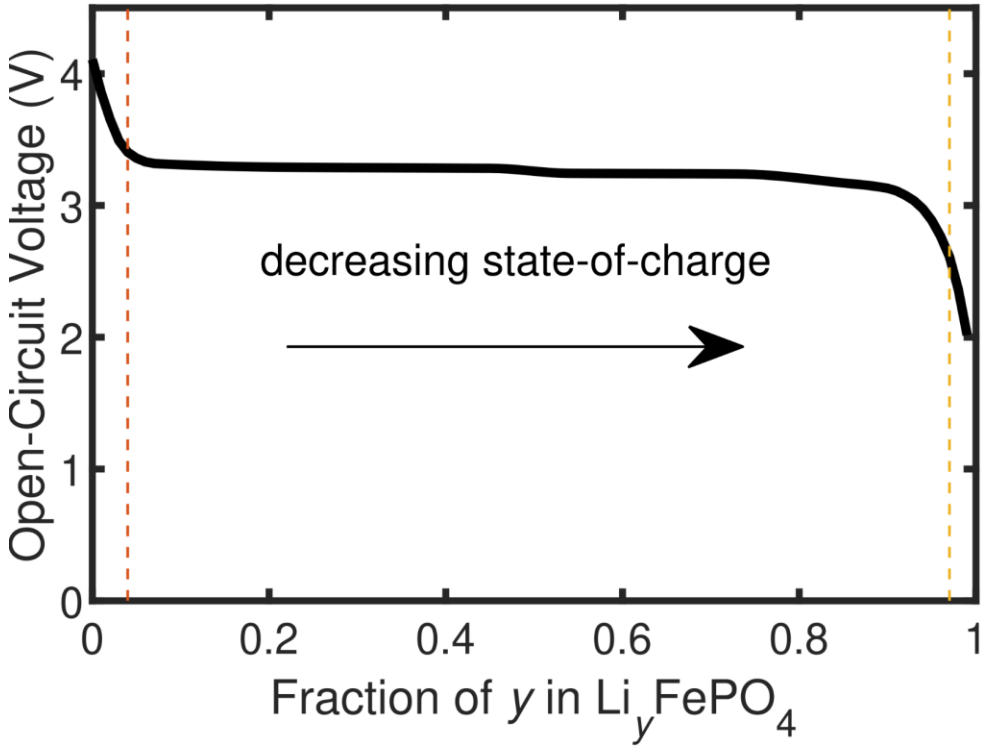

10-Off-Grid Energy Storage Systems © 2025 by Henry Louie is licensed under CC BY-NC-SA 4.0 www.drhenrylouie.com

State-of-Charge

- Same concept as in lead-acid batteries
- 100% SoC typically 3.4 to 3.6 V/cell (higher voltage leads to additional charge capacity, but can damage battery)
- 0% typically 2.5 to 2.7 V/cell (lower voltage allows more charge capacity, but can damage battery)
- Keeping battery SoC between 20 and 80% prolongs the life of the battery (but requires more frequent charging)

10-Off-Grid Energy Storage Systems © 2025 by Henry Louie is licensed under CC BY-NC-SA 4.0 www.drhenrylouie.com

Capacity

- Lithium ion capacity determined and interpreted in the same way as lead-acid (constant current discharge until cut—off voltage reached)
- Capacity less sensitive to magnitude of discharge current
  - Peukert exponent is close to 1.0
- Capacity referenced to 1C instead of 0.05C

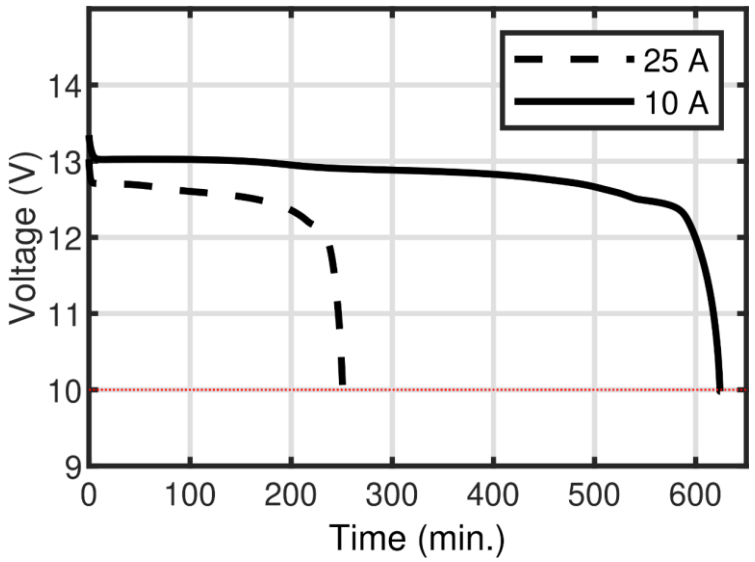

Discharging at 10 A lasts about 2.5 times as long as at 25 A. The charge capacity does not appreciably change.

10-Off-Grid Energy Storage Systems © 2025 by Henry Louie is licensed under CC BY-NC-SA 4.0 www.drhenrylouie.com

Safety

- Concern of all lithium ion batteries is safety
  - possible for “thermal runaway” to occur causing a fire
- $LiFePO_4$ are far less prone to thermal runaway
- Special protection is needed
  - battery management systems (see Chap. 13)

10-Off-Grid Energy Storage Systems © 2025 by Henry Louie is licensed under CC BY-NC-SA 4.0 www.drhenrylouie.com

$LiFePO_4$ vs Lead-Acid

- Lower battery resistance RB (battery voltage does not fluctuate as much as current changes)
- Flatter I-V curve
- Longer cycle life
- Higher maximum charge and discharge rates
- Lower self-discharge rate
- Higher Coulombic and energy efficiencies
- Peukert coefficient closer to 1.0 (capacity does not vary much with discharge rate)
- Higher energy density (they are less heavy for the same capacity)
- Less toxic materials

10-Off-Grid Energy Storage Systems © 2025 by Henry Louie is licensed under CC BY-NC-SA 4.0 www.drhenrylouie.com

Battery Banks

- Batteries usually have capacity of a few kilowatthours or less
- When greater capacity is needed, the batteries are combined into a battery bank
- Higher voltages are possible in battery banks

(*courtesy GVE Projects*)

10-Off-Grid Energy Storage Systems © 2025 by Henry Louie is licensed under CC BY-NC-SA 4.0 www.drhenrylouie.com

Battery Bank Strings

Connecting batteries in strings (series) increases the DC bus voltage

$$V_{\text{bank}} = \sum_{i=1}^{N_{\text{series}}} V_{\text{B},i}$$

$$V_{\text{bank}} = N_{\text{series}} \times V_{\text{B}}$$

N_{series}: number of batteries in series
$V_{\text{B},i}$: terminal voltage of battery i (V)
V_{bank}: terminal voltage of the battery bank (V)

Here we assume that each battery has the same voltage

10-Off-Grid Energy Storage Systems © 2025 by Henry Louie is licensed under CC BY-NC-SA 4.0 www.drhenrylouie.com

Battery String

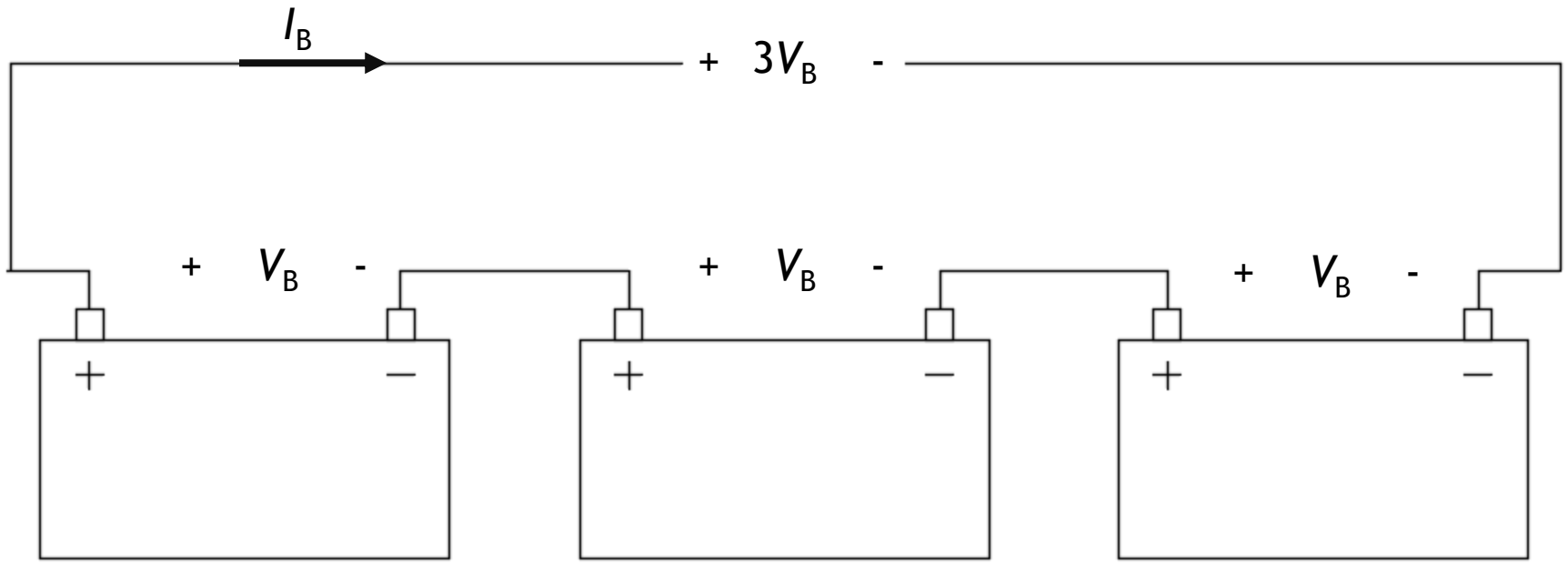

The same current passes through each battery

10-Off-Grid Energy Storage Systems © 2025 by Henry Louie is licensed under CC BY-NC-SA 4.0 www.drhenrylouie.com

Parallel Strings

- Batteries of the same voltage can be connected in strings
- Each string contributes equally to the total battery bank current

$$I_{\text{string}} = \frac{I_{\text{Bank}}}{N_{\text{string}}}$$

N_{string}: number of strings
I_{string}: string current (A)
I_{bank}: battery bank current (A)

10-Off-Grid Energy Storage Systems © 2025 by Henry Louie is licensed under CC BY-NC-SA 4.0 www.drhenrylouie.com

Parallel Strings

Each battery contributes one half of the battery bank current

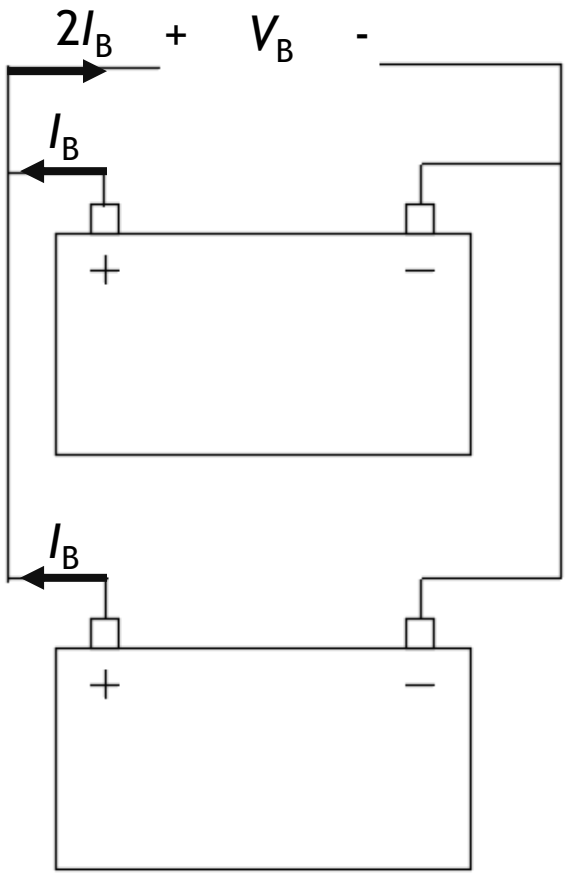

10-Off-Grid Energy Storage Systems © 2025 by Henry Louie is licensed under CC BY-NC-SA 4.0 www.drhenrylouie.com

Battery Bank Configurations

Series/parallel combinations are also possible

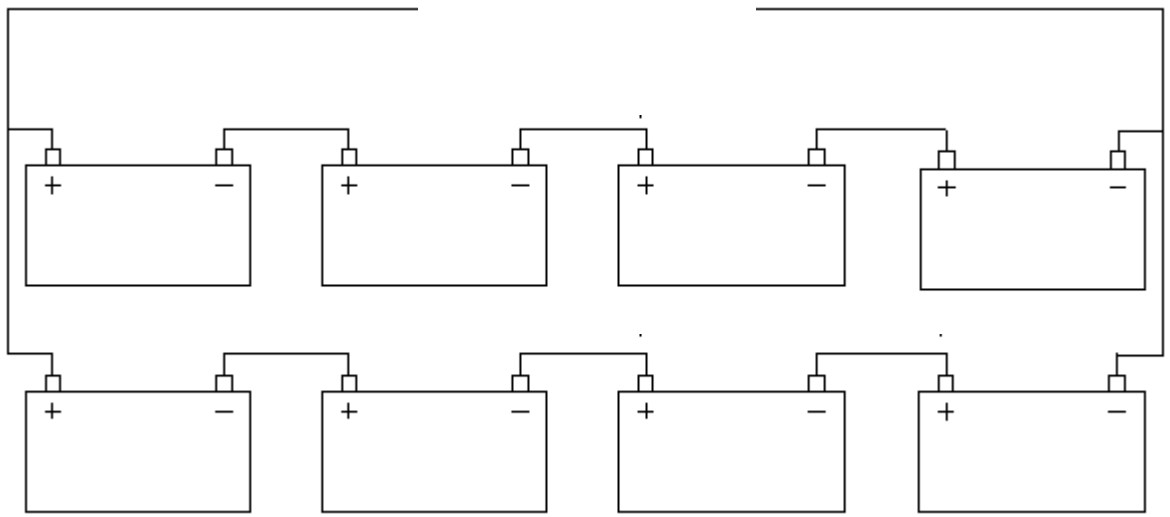

10-Off-Grid Energy Storage Systems © 2025 by Henry Louie is licensed under CC BY-NC-SA 4.0 www.drhenrylouie.com

Battery Energy Capacity

Similar to the power capability of PV modules in an array, the energy capacity of a battery bank is independent of configuration of the batteries

$$E_{\text{bank},x} = N_{\text{string}} \times N_{\text{series}} \times e_{\text{B},x}$$

$e_{B,x}$: energy in an individual battery at discharge current of x (kWh)
$E_{bank,x}$: energy in a battery bank at discharge current of x (kWh)

10-Off-Grid Energy Storage Systems © 2025 by Henry Louie is licensed under CC BY-NC-SA 4.0 www.drhenrylouie.com

Battery Charge Capacity

- The charge capacity of a battery bank is equal to the charge capacity of a single battery multiplied by the number of strings
- The number of series connected batteries does not affect the charge capacity of a battery bank (but it does boost the voltage)

10-Off-Grid Energy Storage Systems © 2025 by Henry Louie is licensed under CC BY-NC-SA 4.0 www.drhenrylouie.com

Exercise

- Assume eight Trojan 06 375 batteries are arranged as shown
- Identify:
  - number of strings
  - number of batteries per string
  - nominal voltage of the battery bank
  - energy capacity of the battery bank (0.05C)
  - charge capacity of the battery (0.05C)

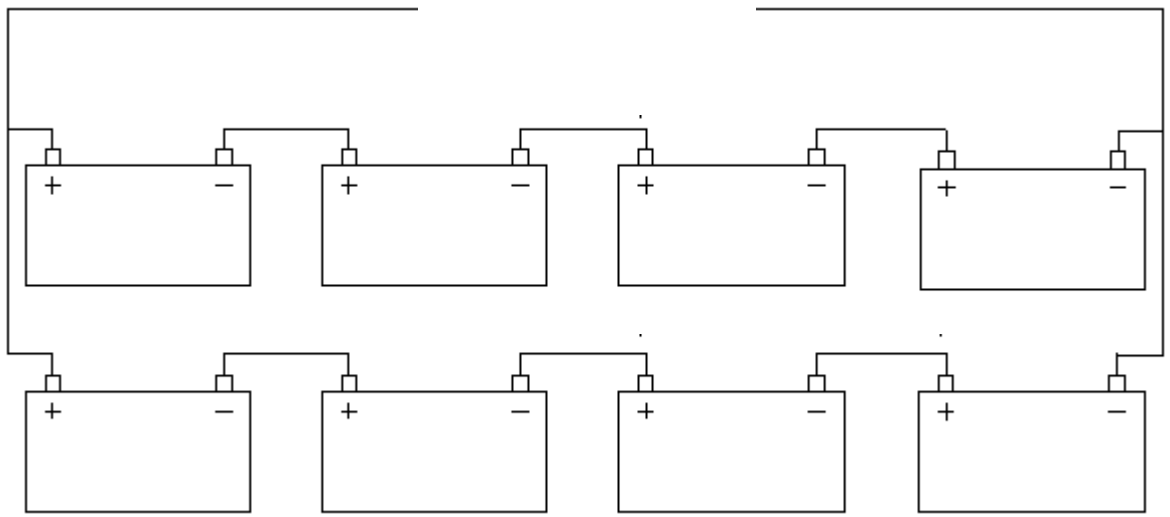

10-Off-Grid Energy Storage Systems © 2025 by Henry Louie is licensed under CC BY-NC-SA 4.0 www.drhenrylouie.com

Exercise

- The number of strings: 2
- The number of batteries per string: 4
- The nominal voltage of the battery bank:

  4 x 6 V = 24 V

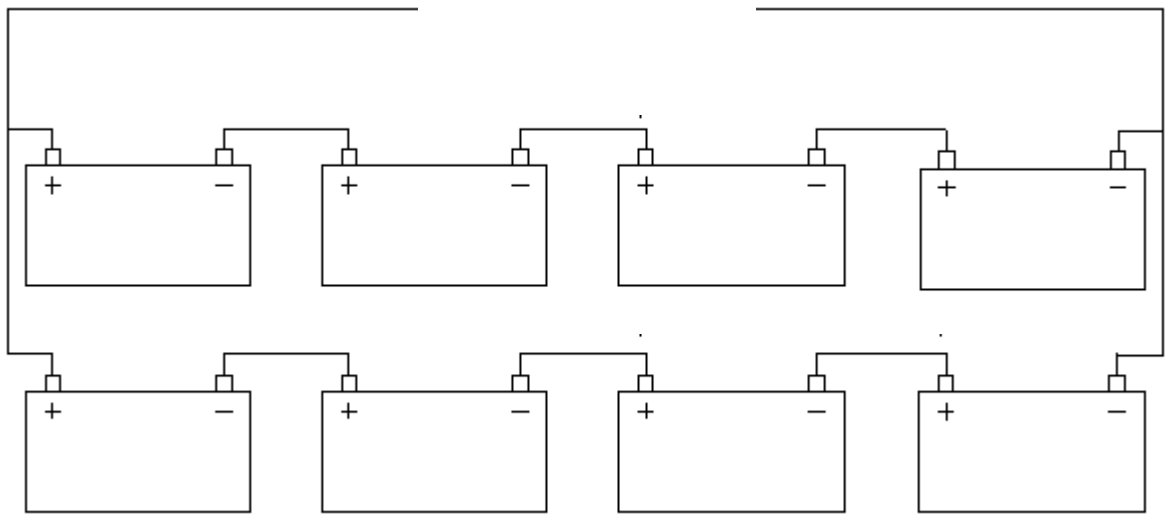

10-Off-Grid Energy Storage Systems © 2025 by Henry Louie is licensed under CC BY-NC-SA 4.0 www.drhenrylouie.com

Exercise

- The energy capacity of the battery bank (0.05C):

  8 x 2.25 = 18 kWh

- The charge capacity of the battery (0.05C)

  375 x 2 = 750 Ah

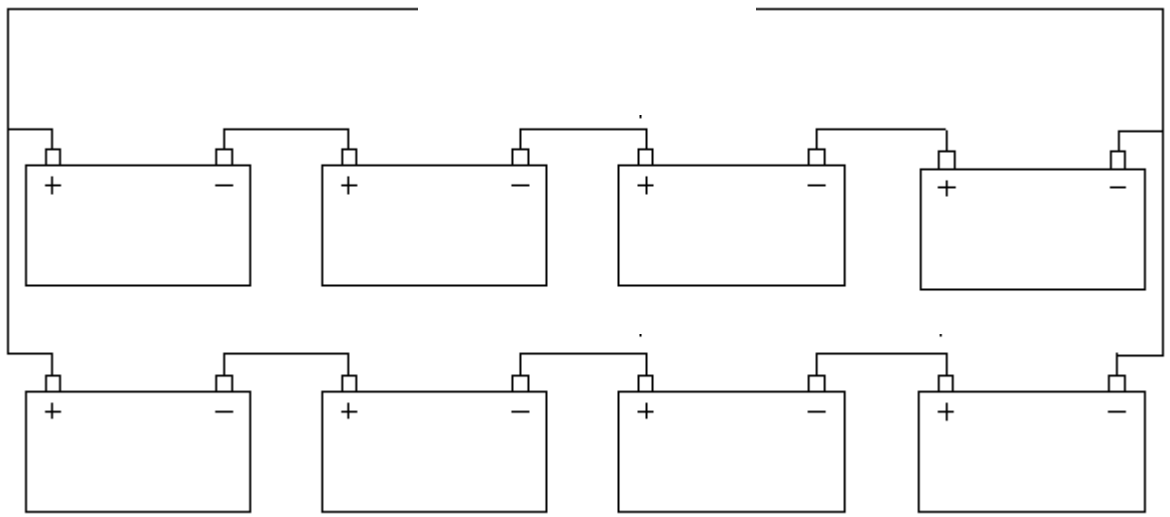

In other words, the battery bank is equivalent to a single 24 V, 750 Ah battery

10-Off-Grid Energy Storage Systems © 2025 by Henry Louie is licensed under CC BY-NC-SA 4.0 www.drhenrylouie.com

Design Example

Design a battery bank using the Trojan 06 375 that is capable of supplying 20 A at 12 V for a 60-hour period

Trojan BATTERY COMPANY

DATA SHEET

SOLAR
TRUE DEEP-CYCLE AGM

MODEL	SAGM 06 375
VOLTAGE	6V
CAPACITY	375Ah @ 20Hr
MATERIAL	Polypropylene
BATTERY	VRLA AGM / Non-Spillable / Maintenance-Free
COLOR	Maroon
WATERING	No Watering Required
IEC 61427	8+ Years Life

6V

PRODUCT + PHYSICAL SPECIFICATIONS

Model	Terminal Type [D]	Dimensions [B] Inches (mm)			Weight Lbs. [F] (kg)	Handles	Installation Orientation
		Length	Width	Height [C]			
SAGM 06 375	M8/LT	11.66 (296)	6.94 (176)	16.31 (414)	114 (52)	Braided Rope	Horizontal and Vertical

ELECTRICAL SPECIFICATIONS

Voltage	Capacity [A] Amp-Hours (Ah)					Energy kWh	Internal Resistance (mΩ)	Short Circuit Current (A)
	10-Hr	20-Hr	48-Hr	72-Hr	100-Hr	20-Hr		
6V	329	375	389	394	400	2.25	1.7	3650

Design Example

Design a battery bank using the Trojan 06 375 that is capable of supplying 20 A at 12 V for a 60-hour period

First note that we need exactly two batteries per string to meet the 12 V requirement. The total number of batteries will therefore be integer multiples of 2 (2, 4, 6, ...)

10-Off-Grid Energy Storage Systems © 2025 by Henry Louie is licensed under CC BY-NC-SA 4.0 www.drhenrylouie.com

Design Example

Design a battery bank using the Trojan 06 375 that is capable of supplying 20 A at 12 V for a 60-hour period

Now do a quick calculation of the charge capacity needed:

20 A x 60 hrs = 1200 Ah

10-Off-Grid Energy Storage Systems © 2025 by Henry Louie is licensed under CC BY-NC-SA 4.0 www.drhenrylouie.com

Design Example

Design a battery bank using the Trojan 06 375 that is capable of supplying 20 A at 12 V for a 60-hour period

Next, determine the approximate number of strings needed

The battery will be discharged over a 60-hour period, which is somewhere between the 48-hour and 72-hour rate listed in the spec sheet

10-Off-Grid Energy Storage Systems © 2025 by Henry Louie is licensed under CC BY-NC-SA 4.0 www.drhenrylouie.com

Design Example

Design a battery bank using the Trojan 06 375 that is capable of supplying 20 A at 12 V for a 60-hour period

Let's consider the 48 hour rate since it is more conservative (it assumes that the whole 1200 Ah is discharged in 48 hours, not 60). The capacity is 389 Ah. Using this rate a total of 1200 Ah/389 Ah = 3.08 strings are needed, which we would round up to four strings.

PRODUCT + PHYSICAL SPECIFICATIONS

Model	Terminal Type [D]	Dimensions [E] Inches (mm)			Weight Lbs. [F] (kg)	Handles	Installation Orientation
		Length	Width	Height [C]			
SAGM 06 375	M8/LT	11.66 (296)	6.94 (176)	16.31 (414)	114 (52)	Braided Rope	Horizontal and Vertical

ELECTRICAL SPECIFICATIONS

Voltage	Capacity [A] Amp-Hours (Ah)					Energy kWh	Internal Resistance (mΩ)	Short Circuit Current (A)
	10-Hr	20-Hr	48-Hr	72-Hr	100-Hr	20-Hr		
6V	329	375	389	394	400	2.25	1.7	3650

The battery bank is connected as

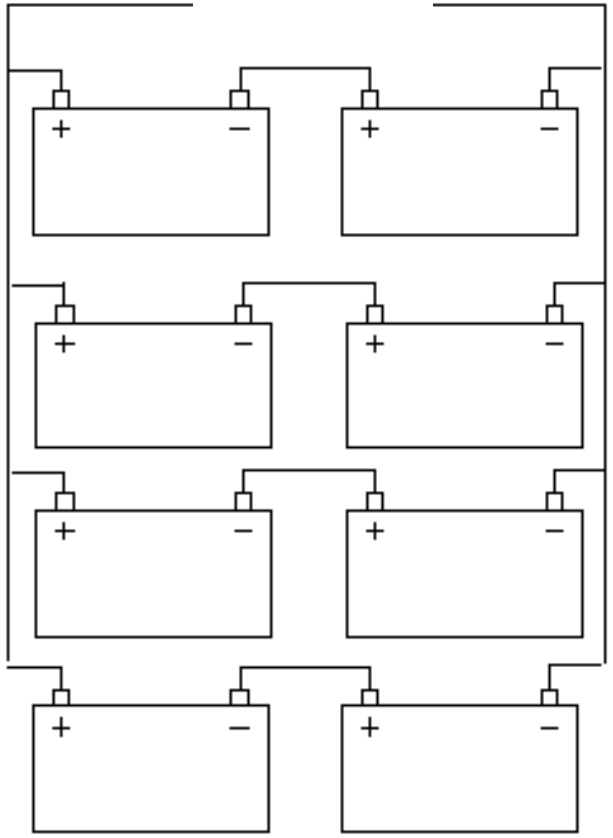

10-Off-Grid Energy Storage Systems © 2025 by Henry Louie is licensed under CC BY-NC-SA 4.0 www.drhenrylouie.com

Design Example

How long will this battery bank last given the load is 20 A?

Each string supplies: 20/4 =5 A

Current at 72 hour rate: 394/72 = 5.47 A

Current at 100 hour rate: 400/100= 4.0 A

The battery will last somewhat longer than 72 hours, but not as long as 100 hrs. We could use Peurket's Equation to improve our estimate

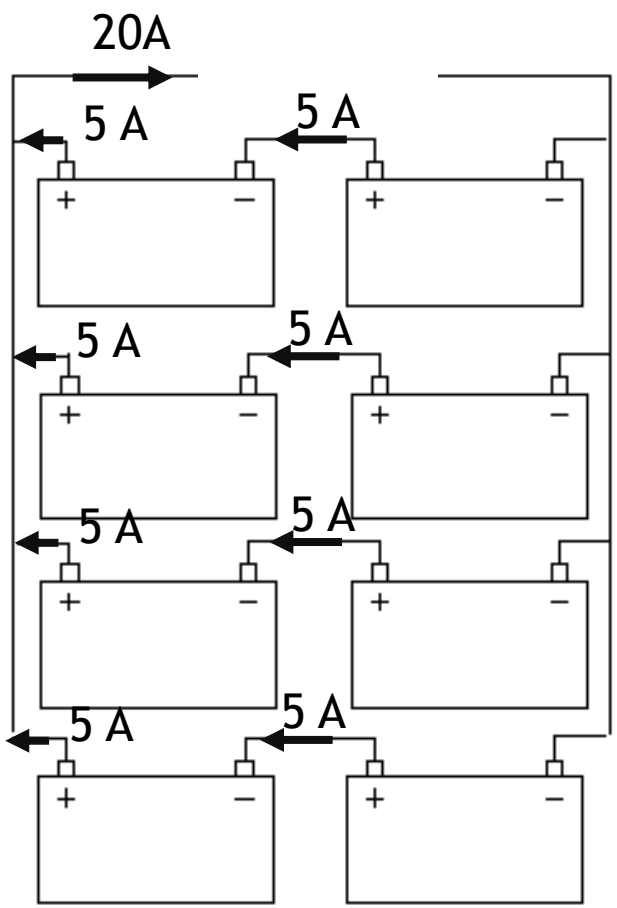

10-Off-Grid Energy Storage Systems © 2025 by Henry Louie is licensed under CC BY-NC-SA 4.0 www.drhenrylouie.com

Other Considerations

- All batteries in a battery bank should be of the same model, age, and condition
- Limit the number of strings (for safety)
- Few larger batteries are preferred to many smaller batteries
- Provide ventilation and spill protection

10-Off-Grid Energy Storage Systems © 2025 by Henry Louie is licensed under CC BY-NC-SA 4.0 www.drhenrylouie.com

Real World Conditions

- Most everything in this lecture is based on constant current assumptions
- Constant current conditions rarely occur in off-grid systems:
  - Constant power and constant impedance loads will not draw constant current from a battery
  - Load changes throughout the day
- What do we do?

10-Off-Grid Energy Storage Systems © 2025 by Henry Louie is licensed under CC BY-NC-SA 4.0 www.drhenrylouie.com

Real World Conditions

- Interpret every calculation as an estimate or approximation only (besides, most models ignore temperature and age of the battery)
- Use either the maximum current or the average current as the "constant current" in the equations
  - BUT do not approximate the total discharge

10-Off-Grid Energy Storage Systems © 2025 by Henry Louie is licensed under CC BY-NC-SA 4.0 www.drhenrylouie.com

Example

- Let the daily charge be 194.4 Ah, with a maximum current of 15 A and an average current of 8.1 A
- Select a battery whose capacity is at least

  c_{15} = 194.4 Ah OR

  $c_{8.1}$ = 194.4 Ah

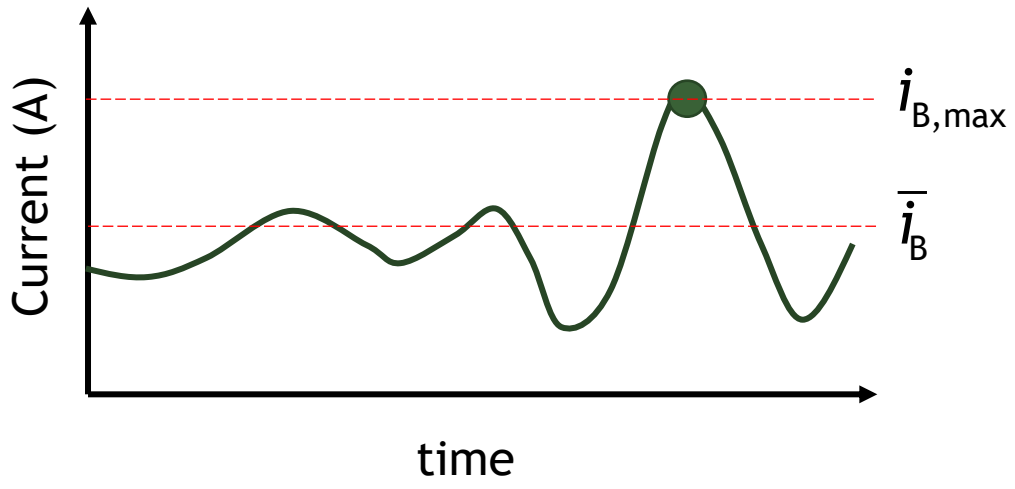

c_{15} is a more conservative choice, but the battery will be more expensive

10-Off-Grid Energy Storage Systems © 2025 by Henry Louie is licensed under CC BY-NC-SA 4.0 www.drhenrylouie.com

Economic Considerations

- Capital cost: among the most expensive energy production system components
  - US$150-US$300/kWh for lead-acid
  - US$275 to US$700/kWh for $LiFePO_4$ (but $LiFePO_4$ can be discharged more deeply)
- Replacement cost: lead-acid 3-5 years, $LiFePO_4$ 5 to 8 years (or longer)

10-Off-Grid Energy Storage Systems © 2025 by Henry Louie is licensed under CC BY-NC-SA 4.0 www.drhenrylouie.com

Environmental Considerations

- End-of-life disposal plan needed, especially for lead-acid batteries
- Battery recycling is more available for lead-acid than lithium ion
- Environmental impacts of mining lead, lithium, copper, cobalt, aluminum and other minerals can be severe

10-Off-Grid Energy Storage Systems © 2025 by Henry Louie is licensed under CC BY-NC-SA 4.0 www.drhenrylouie.com

Social Considerations

- Batteries are used in off-grid systems of all sizes, benefitting poor households to large industrial users
- If not properly disposed, batteries can be extremely harmful to children and adults

10-Off-Grid Energy Storage Systems © 2025 by Henry Louie is licensed under CC BY-NC-SA 4.0 www.drhenrylouie.com

Other Considerations

- Cobalt used in certain types of lithium-ion batteries (not $LiFePO_4$) has serious ethical and environmental concerns, including use of child labor
- Lead-acid batteries are often the first major component to fail, and financial planning is needed to save money to replace them

10-Off-Grid Energy Storage Systems © 2025 by Henry Louie is licensed under CC BY-NC-SA 4.0 www.drhenrylouie.com

Summary

- Batteries are used in many off-grid system architectures to improve reliability and to serve load in the absence of generation
- Batteries rely on electrochemical reactions to produce voltage
- Battery can be modeled as a state-of-charge voltage in series with a resistance
- Important battery characteristics: open-circuit and nominal voltage, capacity, I-V curve, cycle life
- LiFePO4 batteries are more expensive and have safety concerns, but offer superior cycle life and technical characteristics
- Batteries can be connected to form a battery bank to increase voltage and capacity

10-Off-Grid Energy Storage Systems © 2025 by Henry Louie is licensed under CC BY-NC-SA 4.0 www.drhenrylouie.com