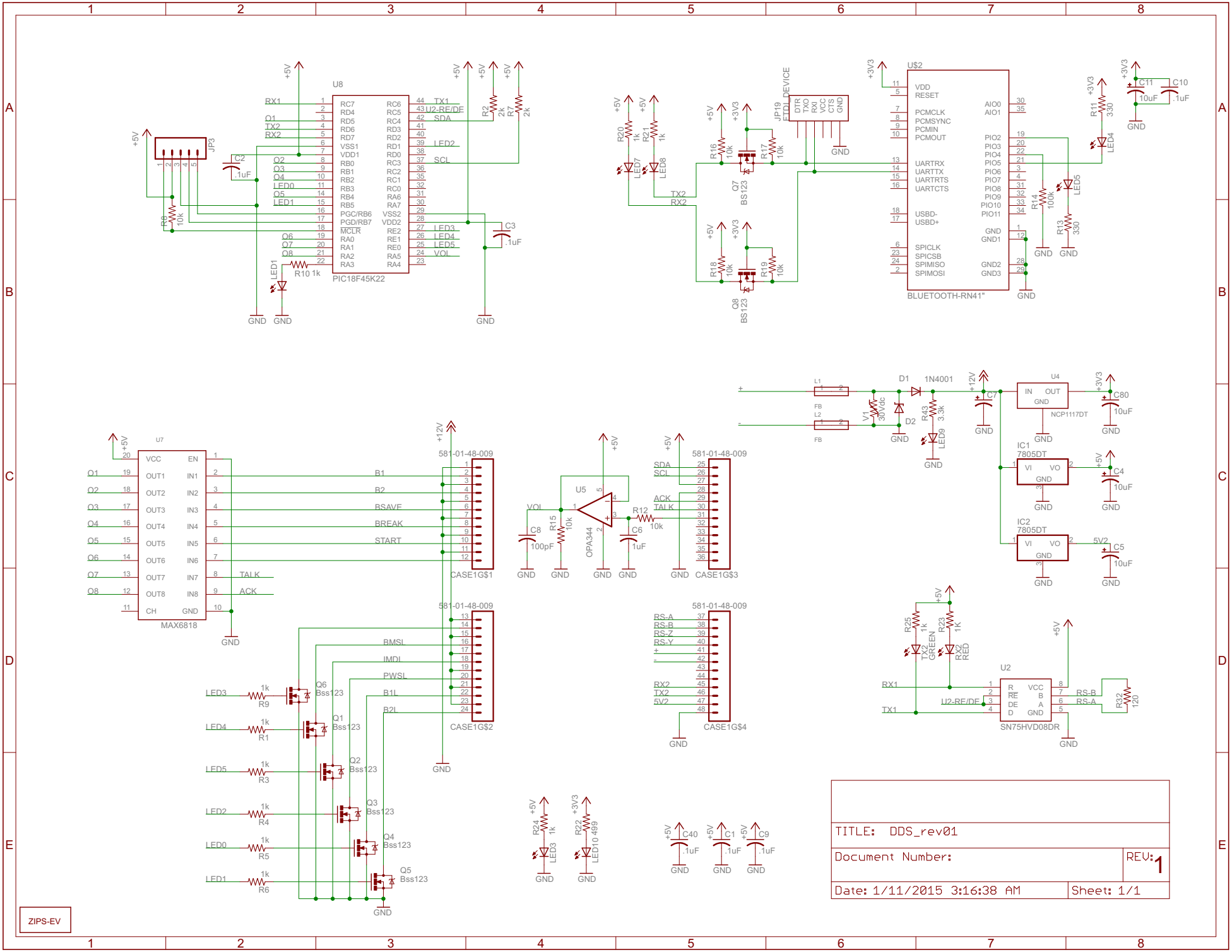
U8
PIC18F45K22
JP3
U$2
BLUETOOTH-RN41"
JP19
FTDI_DEVICE
U7
MAX6818
581-01-48-009
CASE1G$1
CASE1G$2
CASE1G$3
CASE1G$4
U5
OPA344
U4
NCP1117DT
IC1
7805DT
IC2
7805DT
U2
SN75HVD08DR
TITLE: DDS_rev01
Document Number:
REV: 1
Date: 1/11/2015 3:16:38 AM
Sheet: 1/1
ZIPS-EV