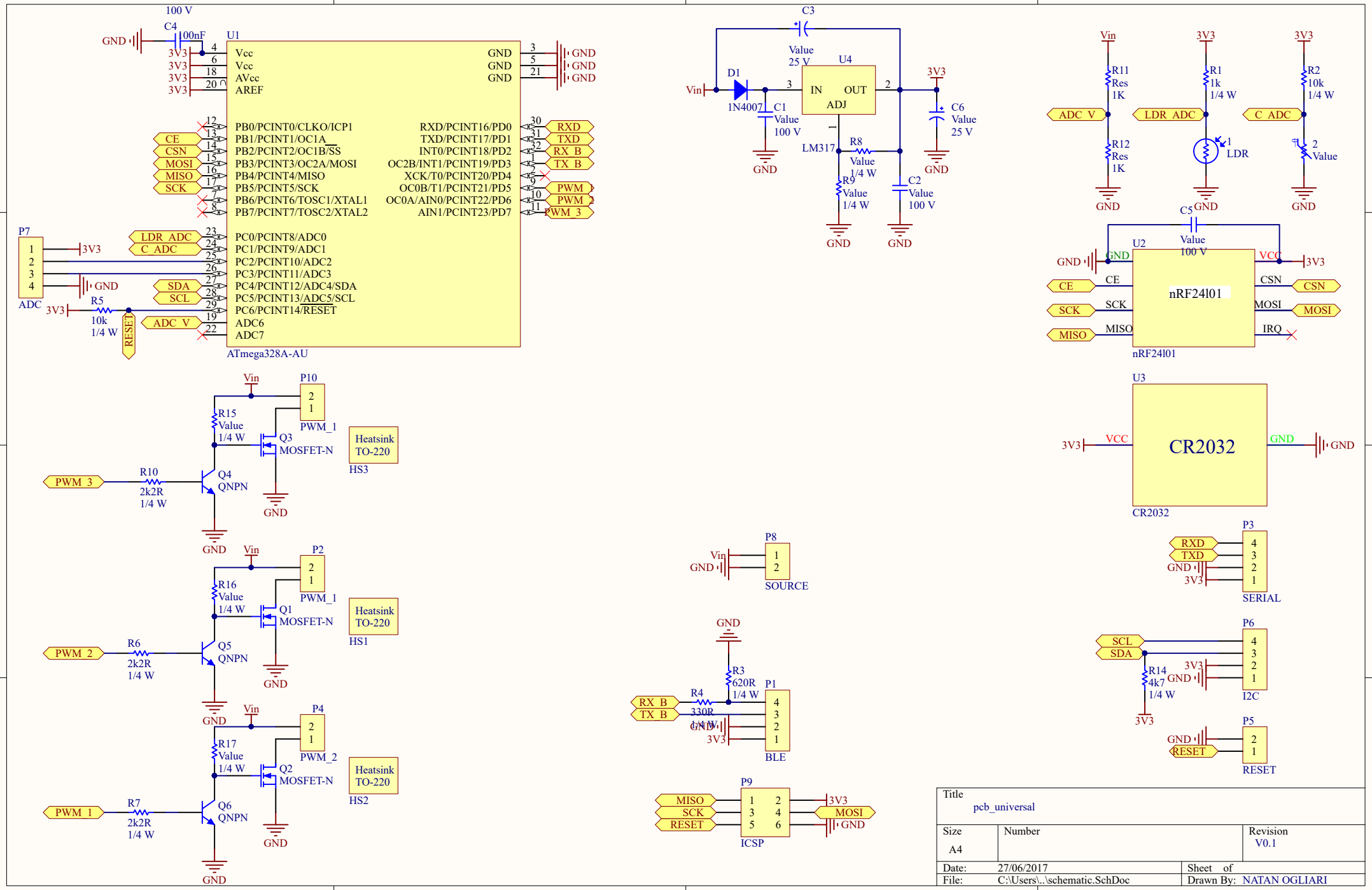
U1
ATmega328A-AU
Vcc
Vcc
AVcc
AREF
GND
GND
GND
PB0/PCINT0/CLKO/ICP1
PB1/PCINT1/OC1A
PB2/PCINT2/OC1B/SS
PB3/PCINT3/OC2A/MOSI
PB4/PCINT4/MISO
PB5/PCINT5/SCK
PB6/PCINT6/TOSC1/XTAL1
PB7/PCINT7/TOSC2/XTAL2
PC0/PCINT8/ADC0
PC1/PCINT9/ADC1
PC2/PCINT10/ADC2
PC3/PCINT11/ADC3
PC4/PCINT12/ADC4/SDA
PC5/PCINT13/ADC5/SCL
PC6/PCINT14/RESET
ADC6
ADC7
RXD/PCINT16/PD0
TXD/PCINT17/PD1
INT0/PCINT18/PD2
OC2B/INT1/PCINT19/PD3
XCK/T0/PCINT20/PD4
OC0B/T1/PCINT21/PD5
OC0A/AIN0/PCINT22/PD6
AIN1/PCINT23/PD7
CE
CSN
MOSI
MISO
SCK
LDR_ADC
C_ADC
SDA
SCL
ADC_V
RESET
RXD
TXD
RX_B
TX_B
PWM_1
PWM_2
PWM_3
P7
ADC
R5
10k
1/4 W
C4
100nF
100 V
C3
Value
25 V
D1
1N4007
C1
Value
100 V
U4
IN
OUT
ADJ
LM317
R8
Value
1/4 W
R9
Value
1/4 W
C2
Value
100 V
C6
Value
25 V
Vin
3V3
R11
Res
1K
R12
Res
1K
R1
1k
1/4 W
LDR
R2
10k
1/4 W
Value
C5
Value
100 V
U2
nRF24l01
VCC
IRQ
U3
CR2032
P10
PWM_1
R15
Value
1/4 W
Q3
MOSFET-N
Heatsink
TO-220
HS3
R10
2k2R
1/4 W
Q4
QNPN
P2
R16
Value
1/4 W
Q1
MOSFET-N
HS1
R6
2k2R
1/4 W
Q5
QNPN
P4
R17
Value
1/4 W
Q2
MOSFET-N
HS2
R7
2k2R
1/4 W
Q6
QNPN
P8
SOURCE
R3
620R
1/4 W
R4
330R
1/4 W
P1
BLE
P9
ICSP
P3
SERIAL
P6
I2C
R14
4k7
1/4 W
P5
RESET
Title
pcb_universal
Size
A4
Number
Revision
V0.1
Date:
27/06/2017
Sheet of
File:
C:\Users\..\schematic.SchDoc
Drawn By:
NATAN OGLIARI