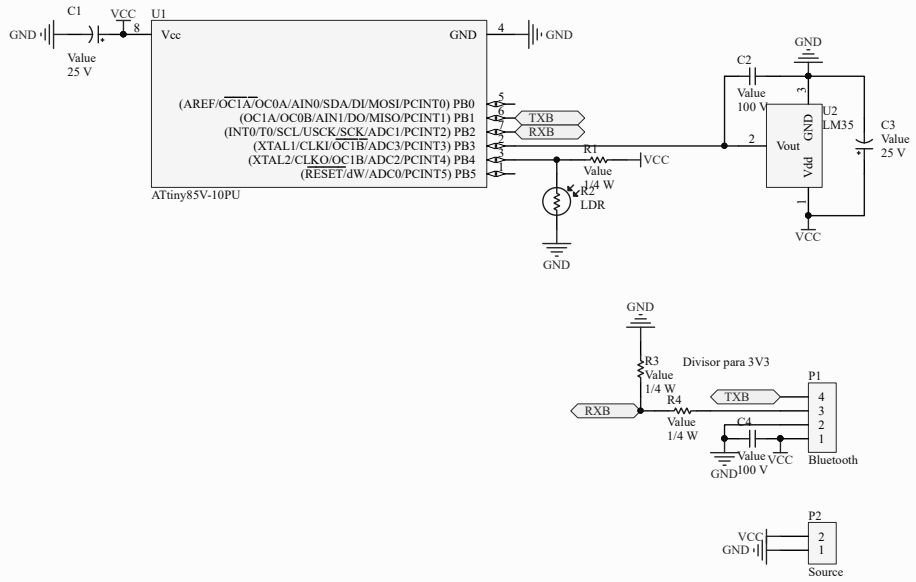

Title		
Módulo de leitura		
Size: A4	Number	Revision
Date: 29/03/2017		Sheet of
File: C:\Users\..\esquematico.SchDoc		Drawn By: