LKS SMK

SOAL LKS

LOMBA KOMPETENSI SISWA

BIDANG

IT NETWORK SYSTEMS ADMINISTRATION

KABUPATEN BANDUNG 2024

Description of Project and tasks

General Configuration

- Configure all devices with hostname and IP Address(es), refer to the Appendix for detailed information
- For Virtual Server & virtual Mikrotik installing process on site. Another it has installed.
- Configure all devices for connect to internet.

DNS Server

- Configure DNS server with bind9
- Configure lks-kabbandung-2024.id in linux server
- Create subdomain with name of competitors, example : nono.lks-kabbandung-2024.id
- Create 50 subdomain for lks-kabbandung-2024.id , example :
    - web01.lks-kabbandung-2024.id
    - …..
    - web50.lks-kabbandung-2024.id
- Create DNS can be pingable with client

Web Server

- Configure web server with apache2
- Configure web server for lks-kabbandung-2024.id, when access webpage make it displayed : **"Welcome to Web lks-kabbandung-2024.id"**
- Configure every subdomain, when access webpage make it displayed : **"Welcome xxx in webxxx.lks-kabbandung-2024.id"** (xxx = subdomain)
- Make php extentions file for to be default redirect webpage

SSH Server

- Default port for SSH server 22xx (xx = number of competitors)
- Make root can't direct login to SSH

Virtual Router

- Virtual router connect to internet from virtual Network NAT
- Make virtual router can traceroute to internet and displayed any hops.
- Configure virtual router to forward internet connection to client.
- Configure static IP Address to server & Routerboard
- Configure virtual router can't pingable from client
- Make virtual router can ping to any network in Routerboard
- Configure virtual router can't be access from www, ftp & telnet

Routerboard

- Configure DHCP Server for VLAN 1xx & VLAN 2xx (xx = number of competitors)
- Configure Routerboard can't be access from VLAN 1xx
- Configure to Block access Facebook & Youtube for network VLAN 1xx
- Configure to Block download file extension .exe , .mp4 for network VLAN 1xx
- Configure to Active web proxy
- Configure routerboard can't be access from www, ftp & telnet

Switch

- Configure to forward configuration from Routerboard
- If use Switch Manageable, configure VLAN Management can be access from virtual client and VLAN 2xx.

Access Point

- Configure SSID : AP-ITNSA-xx (xx = number of competitors)
- Configure default password : ITNSA2024
- Configure web AP can be access from virtual client

Hotspot

- Configure dnsname hotspot.lks-kabbandung-2024.id
- Configure 2 (two) user profiles Manager | Employees :
    - Bandwidth : 5M/5M | 2M/2M
    - Shared user : 2 | 5
- Configure hotspot form login to displayed : “Selamat Datang di Hotspot LKS Kab. Bandung 2024”

Virtual client

- Configure static IP Address
- Virtual Client can be access Web AP & VLAN Management
- Can be access Web Server from virtual server with DNS

Client VLAN 2xx

- Configure automatically IP Address from Routerboard.
- Can be access server via SSH
- Can be access virtual Router & Routerboard via winbox
- Can be access Web Server from virtual server with DNS

Client VLAN 1xx

- Configure automatically IP Address from Routerboard.
- Can’t be access server via SSH
- Can’t be access virtual Router & Routerboard via winbox
- Can be access Web Server from virtual server with DNS

Appendix

Devices	OS / Brand	Hostname	IP Address
Server	Linux Debian 11	Server-itnsa-xx	10.11.xx.2/29
Virtual Server	ROS 7	VR-itnsa-xx	Ether 1 : DHCP from NAT Ether 2 : 10.11.xx.1/29 Ether 3 : 10.30.xx.1/30
Virtual Client	Windows 10	Client-xx	10.11.x.3/29
Routerboard	RB951 / Rb941	RB-itnsa-xx	Ether 1 : 10.30.xx.2/30 VLAN 1xx : 172.10.xx.1/24 VLAN 2xx : 172.20.xx.1/24 VLAN 99 : 192.168.100.1/24
Access Point	Any		172.10.xx.254/24
Client Wifi	Any		DHCP
Client LAN	Any		DHCP
Switch Manageable	Any		VLAN 99 for VLAN Management 192.168.100.254/24

Software

Software	Version
VMWARE	17.x or higher
Winbox	Newest or support
Web Browser	Newest Google Chrome or support
Bitvise	newest

Topology

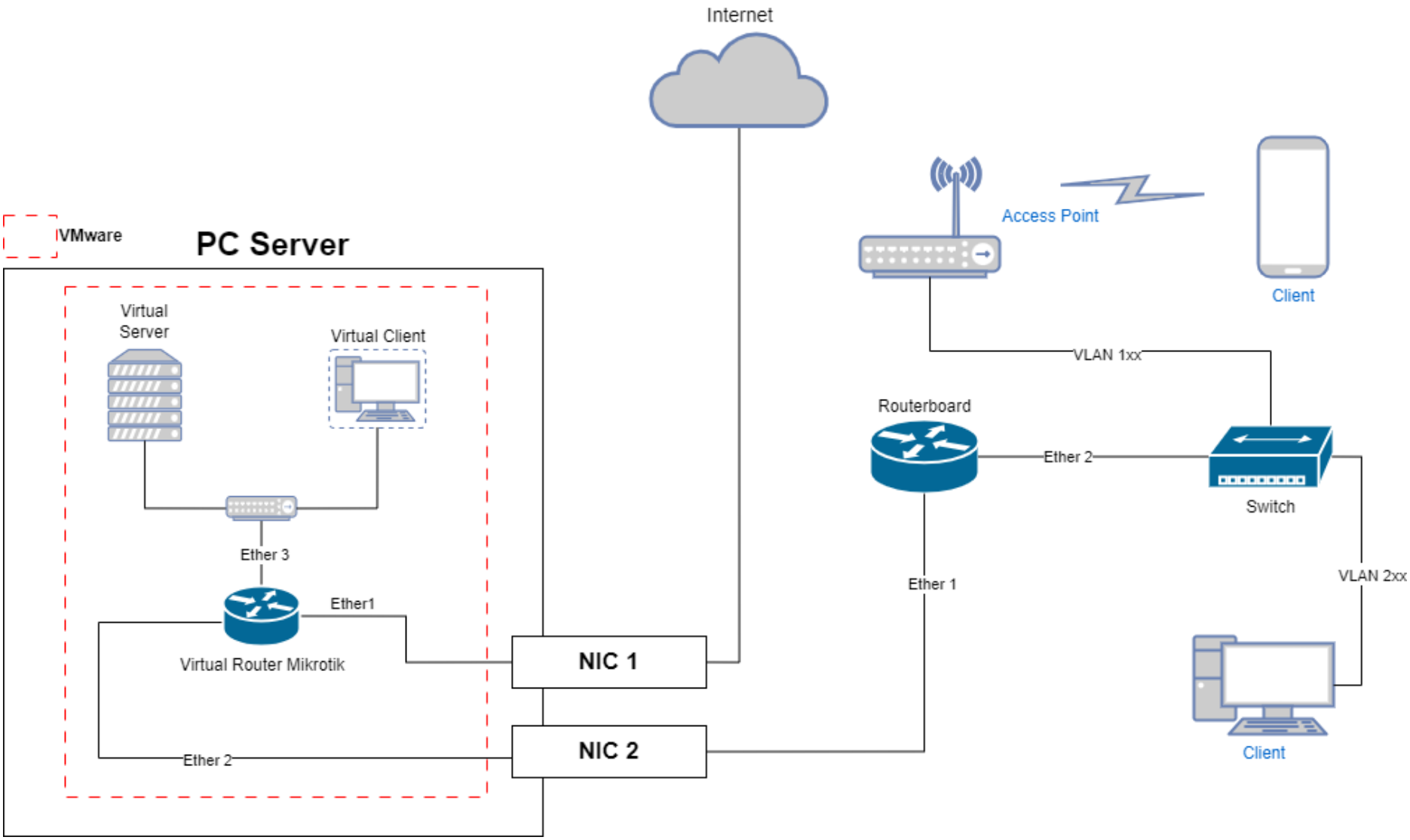
Internet
VMware
PC Server
Virtual Server
Virtual Client
Ether 3
Ether1
Virtual Router Mikrotik
Ether 2
NIC 1
NIC 2
Access Point
Client
VLAN 1xx
Routerboard
Ether 2
Switch
Ether 1
VLAN 2xx
Client