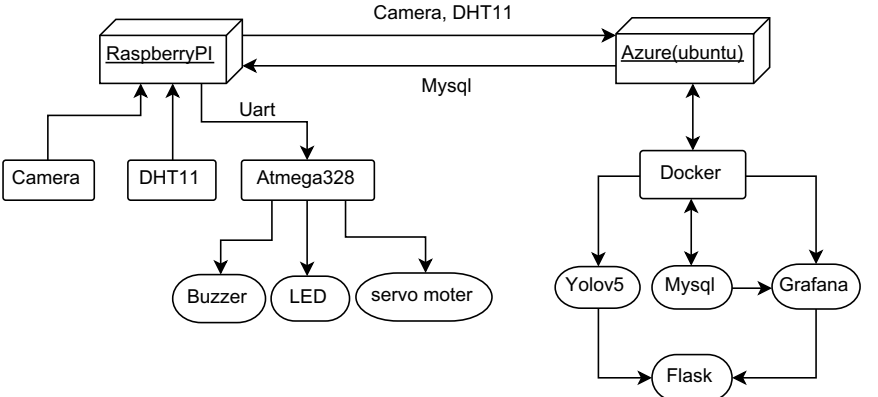
Camera, DHT11
RaspberryPI
Azure(ubuntu)
Mysql
Uart
Camera
DHT11
Atmega328
Docker
Buzzer
LED
servo moter
Yolov5
Mysql
Grafana
Flask