DWG NO. 1300

REVISIONS			
REV	DESCRIPTION	DATE	APPROVED
00	GATE 4 PRELIMINARY RELEASE	02/09/22	SDM
01	REORGANIZE COMPONENTS AND UPSIZE DRAWING	02/16/22	SDM

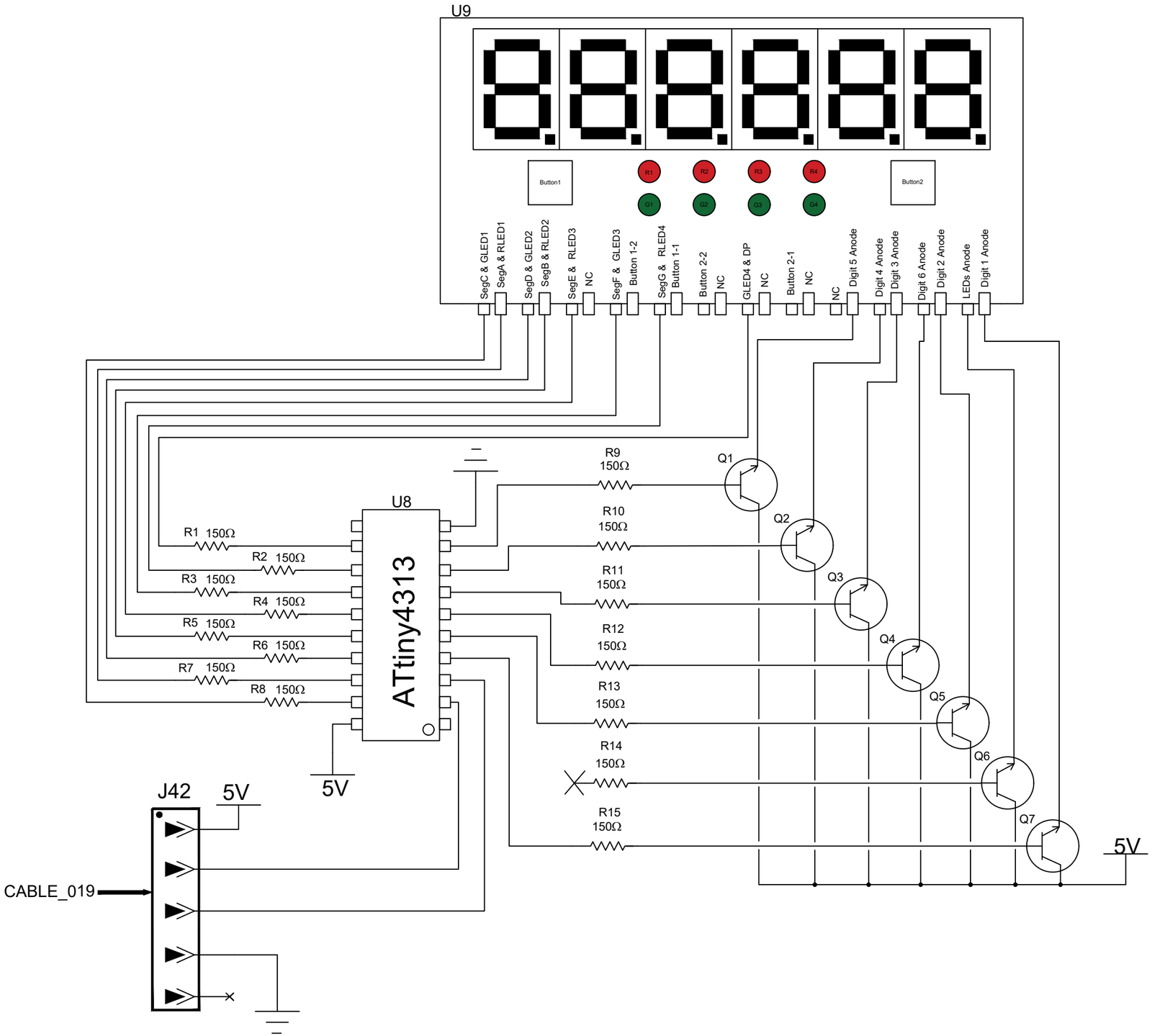

DWG 1300 BILL OF MATERIALS (BOM)			
IDENTIFIER	PART #	DESCRIPTION	QTY
U8	ATTINY4313-PU-ND	AVR series Microcontroller IC 8-Bit	1
U9	GS-7-SEG	Unique Gallagher Station 7-Segment Passive Diplay Board	1
U16 (NOT SHOWN)	1528-2171-ND	Breadboard, General Purpose	1
J42	5337-50510	Connector Header Through Hole 5 position	1
R1 - R15	A105950CT-ND	150 Ohms ±1% 0.6W Through Hole Resistor	15
Q1 - Q7	2721-2N2222A-ND	Bipolar (BJT) Transistor NPN 40 V 600 mA	7
CABLE_019	REFFERENCE DRAWING 1960 FOR DETAILS		

CAD MAINTAINED. CHANGES SHALL BE INCORPORATED BY THE DESIGN ACTIVITY.

PREPARED	E. EICKHOLTZ	2022/02/08	PURDUE POLYTECHNIC NEW ALBANY 3000 TECHNOLOGY AVE NEW ALBANY, IN 47150
CHECKED	S. MATTINGLY	2022/02/16	TITLE: CUSTOM SEVEN SEGMENT DISPLAY CIRCUIT
ENGINEER			FILENAME: 1300.SEGMENT — DWG NO. 1300