DWG NO. 1200

REVISIONS			
REV	DESCRIPTION	DATE	APPROVED
00	GATE 4 PRELIMINARY RELEASE	2/8/22	SM
01	GATE 5 PCB UPDATE	3/14/22	JC

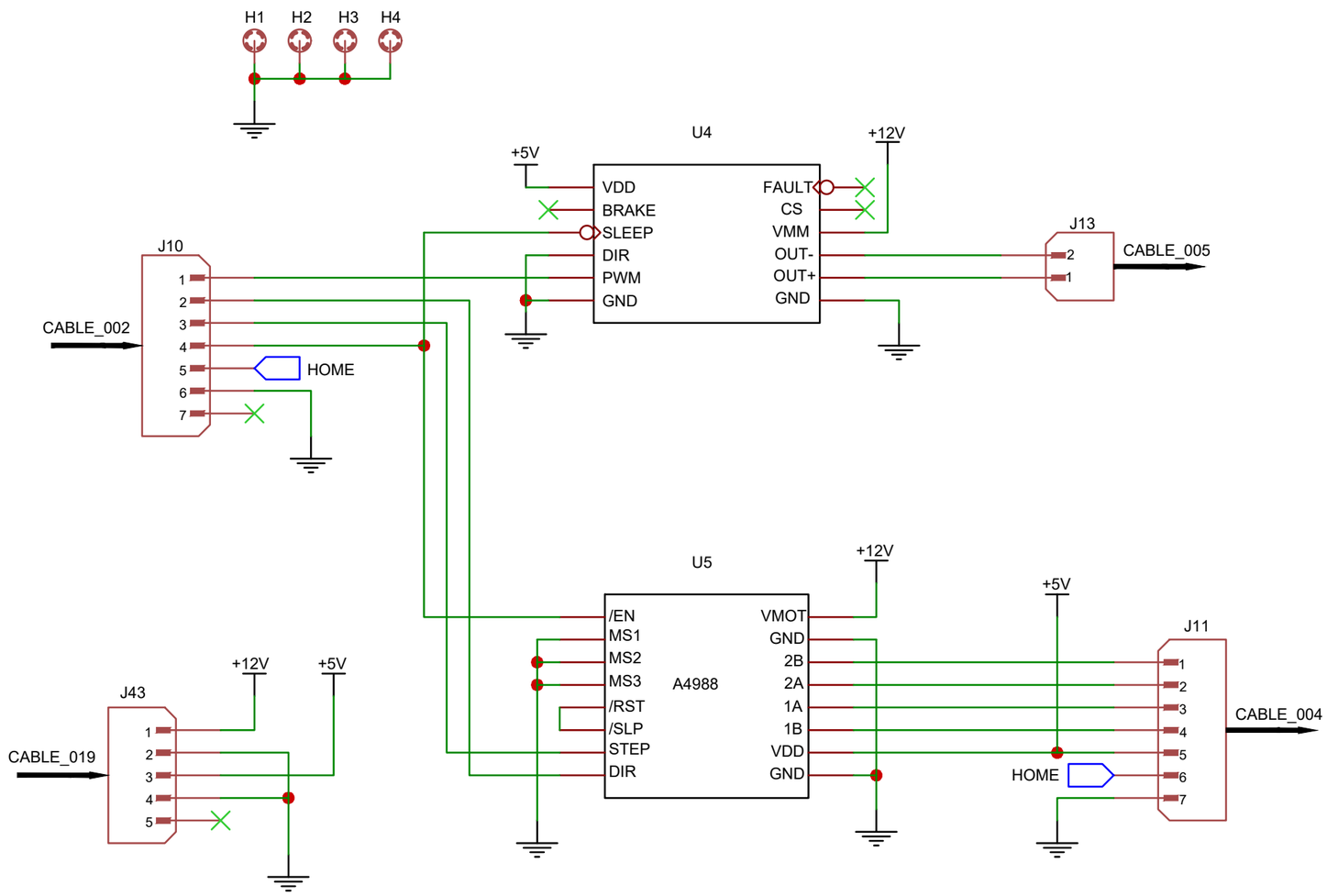

DWG 1200 BILL OF MATERIALS (BOM)		
IDENTIFIER	DESCRIPTION	PART #
U4	DRV8801 DC MOTOR DRIVER CARRIER	2136
U5	A4988 STEPPER DRIVER	1182
U6	CUSTOM JLC PCB	JLC02
J11	CONN HEADER VERT 7POS 2.5MM	533750710
J10	CONN HEADER VERT 7POS 2.5MM	533750710
J13	CONN HEADER VERT 2POS 2.5MM	533750210
J43	CONN HEADER VERT 5POS 2.5MM	533750510
H1	HEX STANDOFF THREADED M2.5	971050154
H2	HEX STANDOFF THREADED M2.5	971050154
H3	HEX STANDOFF THREADED M2.5	971050154
H4	HEX STANDOFF THREADED M2.5	971050154
CABLE_002	REFFERENCE DRAWING 1120	
CABLE_004	REFFERENCE DRAWING 1220	
CABLE_005	REFFERENCE DRAWING 1220	
CABLE_019	REFFERENCE DRAWING 1220	

PREPARED	E. EICKHOLTZ	2021/02/24	PURDUE POLYTECHNIC NEW ALBANY 3000 TECHNOLOGY AVE NEW ALBANY, IN 47150
CHECKED	J. COUCH	2022/03/14	TITLE: MOTOR BOARD SCHEMATIC
ENGINEER			FILENAME: 1200.DWG — DWG NO. 1200